TEMSA

Yedek parça katalogu
Spare parts catalogue
Ersatzteilkatalog

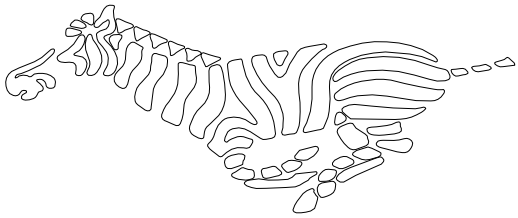

Euro Safari

Substructure MAN

TB162W	**(12.00m)**
TB163W	**(12.00m)**
TB162X	**(12.00m)**
TB163X	**(12.00m)**
TB162Z	**(12.80m)**
TB163Z	**(12.80m)**
TB162Y	**(12.80m)**
TB163Y	**(12.80m)**

Pub.no: KS034005-00
Date: 05.04.2005

TEMSA

İçindekiler
Contents
x

Önsöz
Foreword
x

Araç şasi numarası ve model kodu tanımı
Vehicle chassis number and model code identification
X

01 MOTOR
ENGINE
x

01-010	Motor Engine x	TB162W TB163W	TB162Z TB163Z	TB162X TB163X	TB162Y TB163Y

02 MOTOR SOĞUTMA
ENGINE COOLING
x

02-010	Soğutma sistemi Cooling system x	TB162W	TB162Z	TB162X	TB162Y
02-011	Soğutma sistemi Cooling system x	TB163W	TB163Z	TB163X	TB163Y
02-020	Şarj havası soğutucu ve borular Intercooler and Piping x	TB162W	TB162Z	TB162X	TB162Y
02-021	Şarj havası soğutucu ve borular Intercooler and Piping x	TB163W	TB163Z	TB163X	TB163Y
02-030	Motor soğutma boru ve hortum hattı Engine cooling, pipe & hose line x	TB162W	TB162Z	TB162X	TB162Y
02-031	Motor soğutma boru ve hortum hattı Engine cooling, pipe & hose line x	TB163W	TB163Z	TB163X	TB163Y

03 HAVA EMİŞ MOTOR İÇİN
AIR INTAKE FOR ENGINE
x

03-010	Hava emiş motor için Air intake for Engine x	TB162W TB163W	TB162Z TB163Z	TB162X TB163X	TB162Y TB163Y
03-020	Hava temizleyici Air cleaner x	TB162W TB163W	TB162Z TB163Z	TB162X TB163X	TB162Y TB163Y

04 ALTERNATOR
ALTERNATOR
x

04-010	Alternator Alternator x	TB162W TB163W	TB162Z TB163Z	TB162X TB163X	TB162Y TB163Y

05 FAN TAHRİKİ
FAN DRIVE
x

05-010	Hidrostatik fan tahriki Hydrostatic fan drive x	TB162W	TB162Z	TB162X	TB162Y
05-011	Hidrostatik fan tahriki Hydrostatic fan drive x	TB163W	TB163Z	TB163X	TB163Y

06 DEBRİYAJ
CLUTCH
x

06-010	Debriyaj Clutch x	TB162W TB163W	TB162Z TB163Z	TB162X TB163X	TB162Y TB163Y
06-020	Debriyaj yağ boruları Clutch Oil Piping x	TB162W TB163W	TB162Z TB163Z	TB162X TB163X	TB162Y TB163Y

07 ŞANZUMAN
TRANSMISSION
x

07-010	Şanzuman Transmission x	TB162W TB163W	TB162Z TB163Z	TB162X TB163X	TB162Y TB163Y

08 VİTES
GEARSHIFT
x

08-010	Vites Gearshift x	TB162W TB163W		TB162X TB163X	
08-015	Vites Gearshift x		TB162Z TB163Z		TB162Y TB163Y

09 ÖN AKS
FRONT AXLE
x

09-010	Ön aks Front Axle x	TB162W TB163W	TB162Z TB163Z	TB162X TB163X	TB162Y TB163Y

10 ARKA AKS
REAR AXLE
x

10-010	Arka aks Rear Axle x	TB162W TB163W	TB162Z TB163Z	TB162X TB163X	TB162Y TB163Y

11 ÖN SÜSPANSİYON
FRONT AIR SUSPENSION
x

11-010	Ön süspansiyon Front Suspension x	TB162W TB163W	TB162Z TB163Z	TB162X TB163X	TB162Y TB163Y

12 ARKA SÜSPANSİYON
REAR AIR SUSPENSION
x

12-010	Arka süspansiyon Rear Suspension x	TB162W TB163W	TB162Z TB163Z	TB162X TB163X	TB162Y TB163Y

13 KARDANŞAFT
DRIVE SHAFT
x

13-010	Kardanşaft Propellershaft x	TB162W	TB162Z	TB162X	TB162Y
13-011	Kardanşaft Propellershaft x	TB163W	TB163Z	TB163X	TB163Y

14 PEDAL
PEDAL
x

14-010	Fren, Gaz ve Debriyaj pedalı Brake, Accelerator and Clutch pedal x	TB162W TB163W	TB162Z TB163Z	TB162X TB163X	TB162Y TB163Y

15 MOTOR FRENİ
EXHAUST BRAKE AIR CYLINDER
x

15-010	Motor freni hava silindiri Exhaust brake air cylinder x	TB162W TB163W	TB162Z TB163Z	TB162X TB163X	TB162Y TB163Y

16 DİREKSİYON
STEERING
x

16-010	Direksiyon Steering x	TB162W TB163W	TB162Z TB163Z	TB162X TB163X	TB162Y TB163Y
16-020	Çekme ve pıtman kolu, dişli kutusu Gear box draglinkage arm pitman Pedalbausatz, Schaltungsarm, Antriebswelle	TB162W TB163W	TB162Z TB163Z	TB162X TB163X	TB162Y TB163Y
16-030	Direksiyon yağ boruları Power steering oil piping x	TB162W TB163W	TB162Z TB163Z	TB162X TB163X	TB162Y TB163Y

20 YAKIT
FUEL
x

20-010	Yakıt tankı Fuel Tank x	TB162W TB163W	TB162Z TB163Z	TB162X	TB162Y TB163Y
20-015	Yakıt tankı Fuel Tank x			TB163X	
20-020	Yakıt hattı Fuel Line x	TB162W TB163W	TB162Z TB163Z	TB162X TB163X	TB162Y TB163Y

TEMSA

21 HAVA
AIR
x

21-010	Hava tankı Air tank x	TB162W TB163W	TB162Z TB163Z	TB162X TB163X	TB162Y TB163Y
21-020	Fren boruları Brake air piping x	TB162W TB163W	TB162Z TB163Z	TB162X TB163X	TB162Y TB163Y
21-030	Hava kurutucu boruları Air dryer piping x	TB162W TB163W	TB162Z TB163Z	TB162X TB163X	TB162Y TB163Y

22 EGZOZ
EXHAUST
x

22-010	Egzoz borusu ve susturucu Exhaust Pipe & Muffler x	TB162W	TB162Z	TB162X	TB162Y
22-011	Egzoz borusu ve susturucu Exhaust Pipe & Muffler x	TB163W	TB163Z	TB163X	TB163Y

23 KLİMA VE KOMPRESÖR
AIR CONDITION & COMPRESSOR
x

23-010	Klima Air Conditioner x	TB162W TB163W	TB162Z TB163Z	TB162X TB163X	TB162Y TB163Y
23-020	Klima kompresörü Compressor, Air Conditioner x	TB162W TB163W	TB162Z TB163Z	TB162X TB163X	TB162Y TB163Y

24 ISITMA
HEATING
x

24-001	Kutu kalorifer Heaterbox x	TB162W TB163W			
24-005	Kalorifer - 02.07.2004 e kadar Central heating - up to 2004'07.02 x	TB162W TB163W			
24-006	Kalorifer - 02.07.2004 den sonra Central heating - after 2004'07.02 x	TB162W TB163W			
24-007	Kalorifer - tuvaletli - 02.07.2004 e kadar Central heating- with toilet - up to 2004'07.02 x	TB162W TB163W			
24-008	Kalorifer - tuvaletli - 02.07.2004 den sonra Central heating- with toilet- after 2004'07.02 x	TB162W TB163W			
24-009	Kalorifer - Sütrak A/C Central heating- Sütrak A/C x	TB162W TB163W			
24-010	Kalorifer - 02.07.2004 e kadar Central heating - up to 2004'07.02 x		TB162Z TB163Z		

24-011	Kalorifer - 02.07.2004 den sonra Central heating - after 2004'07.02 x		TB162Z TB163Z		
24-012	Kalorifer - tuvaletli - 02.07.2004 e kadar Central heating- with toilet - up to 2004'07.02 x		TB162Z TB163Z		
24-013	Kalorifer - tuvaletli - 02.07.2004 den sonra Central heating- with toilet- after 2004'07.02 x		TB162Z TB163Z		
24-014	Kalorifer Central heating x			TB162X TB163X	
24-015	Kalorifer Central heating x				TB162Y TB163Y
24-020	Sıcak su boruları - 02.07.2004 e kadar Heater piping - up to 2004'07.02 x	TB162W TB163W		TB162X TB163X	
24-021	Sıcak su boruları - 02.07.2004 den sonra Heater piping - after 2004'07.02 x	TB162W TB163W		TB162X TB163X	
24-022	Sıcak su boruları - 02.07.2004 e kadar Heater piping - up to 2004'07.02 x		TB162Z TB163Z		TB162Y TB163Y
24-023	Sıcak su boruları - 02.07.2004 den sonra Heater piping - after 2004'07.02 x		TB162Z TB163Z		TB162Y TB163Y
24-030	Ön ısıtma ünitesi Preheather Unit x	TB162W TB163W	TB162Z TB163Z	TB162X TB163X	TB162Y TB163Y
24-040	Defroster Defroster x	TB162W TB163W	TB162Z TB163Z	TB162X TB163X	TB162Y TB163Y

25 KOLTUK SEAT

x

25-010	Yolcu koltukları Passenger seats x	TB162W TB163W	TB162Z TB163Z	TB162X TB163X	TB162Y TB163Y
25-020	Sürücü koltuğu Drivers seat x			TB162X TB163X	TB162Y TB163Y
25-021	Sürücü koltuğu Drivers seat x	TB162W TB163W	TB162Z TB163Z		
25-030	Hostes koltuğu Assistance seat x	TB162W TB163W	TB162Z TB163Z	TB162X TB163X	TB162Y TB163Y
25-040	Koltuk rayı - 30.09.2004 e kadar Seat rail - up to 2004'09.30 x	TB162W TB163W			
25-041	Koltuk rayı - 30.09.2004 e kadar Seat rail - up to 2004'09.30 x		TB162Z TB163Z		

25-042	Koltuk rayı - 30.09.2004 den sonra Seat rail - after 2004'09.30 x	TB162W TB163W	TB162Z TB163Z	TB162X TB163X	TB162Y TB163Y

26 LAMBALAR, GÖSTERGELER VE SİVİÇLER
LIGHTS, INSTRUMENT & SWITCHES
x

26-010	Ön lambalar Front Lamps x	TB162W TB163W	TB162Z TB163Z	TB162X TB163X	TB162Y TB163Y
26-020	Arka lambalar Rear Lamps x	TB162W TB163W	TB162Z TB163Z	TB162X TB163X	TB162Y TB163Y
26-030	Bagaj,koridor,basamak, motor odası ve yan lambalar Trunk room, step, aisle and side lamps x	TB162W TB163W	TB162Z TB163Z	TB162X TB163X	TB162Y TB163Y
26-040	Multiset sistem Multiset system x	TB162W TB163W	TB162Z TB163Z	TB162X TB163X	TB162Y TB163Y
26-050	Ön kumanda siviçleri - 15.05.2004 e kadar Front switches - up to 2004' 05.15 x	TB162W TB163W	TB162Z TB163Z		
26-051	Ön kumanda siviçleri - 15.05.2004 den sonra Front switches - after 2004' 05.15 x	TB162W TB163W	TB162Z TB163Z		
26-052	Ön kumanda siviçleri Front switches x			TB162X TB163X	TB162Y TB163Y
26-060	Yan kumanda kutusu- 15.05.2004 e kada Side switch box - up to 2004' 05.15 x	TB162W TB163W	TB162Z TB163Z		
26-061	Yan kumanda kutusu - 15.05.2004 den sonra Side switch box - after 2004' 05.15 x	TB162W TB163W	TB162Z TB163Z		
26-062	Yan kumanda kutusu Side switch box x			TB162X TB163X	TB162Y TB163Y
26-070	Ön kumanda paneli trimi Dashboard and front lower trim Trimm, Vordere Steuerungspaneele	TB162W TB163W	TB162Z TB163Z	TB162X TB163X	TB162Y TB163Y

27 CAMLAR
WINDOWS
x

27-010	Ön ve arka cam Windscreen and rear window x	TB162W TB163W	TB162Z TB163Z	TB162X TB163X	TB162Y TB163Y
27-020	Yan camlar Side windows x	TB162W TB163W			
27-021	Yan camlar Side windows x		TB162Z TB163Z		
27-022	Yan camlar Side windows x			TB162X TB163X	

27-023	Yan camlar Side windows x				TB162Y TB163Y
27-030	Sürücü camı Drivers window x	TB162W TB163W	TB162Z TB163Z	TB162X TB163X	TB162Y TB163Y
27-040	Panorama cam ve yağmur oluğu Window panorama & drip moulding x	TB162W TB163W	TB162Z TB163Z	TB162X TB163X	TB162Y TB163Y
27-050	Çift cam dayama profilleri Double glazed glass frame x	TB162W TB163W			
27-051	Çift cam dayama profilleri Double glazed glass frame x		TB162Z TB163Z		

28 KAPILAR, KAPAKLAR
DOORS & LIDS
x

28-010	Ön kapı Front Door x	TB162W TB163W	TB162Z TB163Z	TB162X TB163X	TB162Y TB163Y
28-020	Orta kapı - tek kanat Center door - single leaf x	TB162W TB163W	TB162Z TB163Z		
28-022	Orta kapı - tek kanat (İsrail) Center door - single leaf (Israel) x	TB162W			
28-025	Orta kapı - çift kanat Center Door - double leaf x			TB162X TB163X	TB162Y TB163Y
28-030	Yan kapak - standart kilit Side lid - standard lock x	TB162W TB163W			
28-030.1	Yan kapak - Happich kilit Side lid - Happich lock x	TB162W TB163W			
28-031	Yan kapak - standart kilit Side lid - standard lock x	TB162W TB163W			
28-031.1	Yan kapak - Happich kilit Side lid - Happich lock x	TB162W TB163W			
28-032	Yan kapak - standart kilit Side lid - standard lock x	TB162W TB163W			
28-032.1	Yan kapak - Happich kilit Side lid - Happich lock x	TB162W TB163W			
28-033	Yan kapak - standart kilit Side lid - standard lock x	TB162W TB163W			
28-033.1	Yan kapak - Happich kilit Side lid - Happich lock x	TB162W TB163W			

28-034	Yan kapak - standart kilit Side lid - standard lock x	TB162W TB163W	
28-034.1	Yan kapak - Happich kilit Side lid - Happich lock x	TB162W TB163W	
28-035	Yan kapak - standart kilit Side lid - standard lock x	TB162W TB163W	
28-035.1	Yan kapak - Happich kilit Side lid - Happich lock x	TB162W TB163W	
28-036	Yan kapak - standart kilit Side lid - standard lock x	TB162W TB163W	TB162Z TB163Z
28-036.1	Yan kapak - Happich kilit Side lid - Happich lock x	TB162W TB163W	TB162Z TB163Z
28-037	Yan kapak - standart kilit Side lid - standard lock x	TB162W TB163W	
28-037.1	Yan kapak - Happich kilit Side lid - Happich lock x	TB162W TB163W	
28-038	Yan kapak - standart kilit Side lid - standard lock x	TB162W TB163W	
28-038.1	Yan kapak - Happich kilit Side lid - Happich lock x	TB162W TB163W	
28-040	Yan kapak - standart kilit Side lid - standard lock x		TB162Z TB163Z
28-040.1	Yan kapak - Happich kilit Side lid - Happich lock x		TB162Z TB163Z
28-041	Yan kapak - standart kilit Side lid - standard lock x		TB162Z TB163Z
28-041.1	Yan kapak - Happich kilit Side lid - Happich lock x		TB162Z TB163Z
28-042	Yan kapak - standart kilit Side lid - standard lock x		TB162Z TB163Z
28-042.1	Yan kapak - Happich kilit Side lid - Happich lock x		TB162Z TB163Z
28-043	Yan kapak - standart kilit Side lid - standard lock x		TB162Z TB163Z
28-043.1	Yan kapak - Happich kilit Side lid - Happich lock x		TB162Z TB163Z

28-044	Yan kapak - standart kilit Side lid - standard lock x	TB162Z TB163Z	
28-044.1	Yan kapak - Happich kilit Side lid - Happich lock x	TB162Z TB163Z	
28-045	Yan kapak - standart kilit Side lid - standard lock x	TB162Z TB163Z	
28-045.1	Yan kapak - Happich kilit Side lid - Happich lock x	TB162Z TB163Z	
28-046	Yan kapak - standart kilit Side lid - standard lock x	TB162Z TB163Z	
28-046.1	Yan kapak - Happich kilit Side lid - Happich lock x	TB162Z TB163Z	
28-047	Yan kapak - standart kilit Side lid - standard lock x	TB162Z TB163Z	
28-047.1	Yan kapak - Happich kilit Side lid - Happich lock x	TB162Z TB163Z	
28-050	Yan kapak - Happich kilit Side lid - Happich lock x	TB162X TB163X	TB162Y TB163Y
28-051	Yan kapak - Happich kilit Side lid - Happich lock x	TB162X TB163X	TB162Y TB163Y
28-052	Yan kapak - Happich kilit Side lid - Happich lock x	TB162X TB163X	
28-053	Yan kapak - Happich kilit Side lid - Happich lock x	TB162X TB163X	
28-054	Yan kapak - Happich kilit Side lid - Happich lock x		TB162Y TB163Y
28-055	Yan kapak - Happich kilit Side lid - Happich lock x	TB162X TB163X	TB162Y TB163Y
28-056	Yan kapak - Happich kilit Side lid - Happich lock x	TB162X TB163X	TB162Y TB163Y
28-057	Yan kapak - Happich kilit Side lid - Happich lock x	TB162X TB163X	TB162Y TB163Y
28-058	Yan kapak - Happich kilit Side lid - Happich lock x	TB162X TB163X	TB162Y TB163Y
28-059	Yan kapak - Happich kilit Side lid - Happich lock x	TB162X TB163X	

28-060	Yan kapak - Happich kilit Side lid - Happich lock x				TB162Y TB163Y
28-070	Yan kapak - standart kilit Side lid - standard lock x	TB162W TB163W	TB162Z TB163Z	TB162X TB163X	TB162Y TB163Y
28-075	Çamurluk kapakları Fender lids x	TB162W TB163W	TB162Z TB163Z	TB162X TB163X	TB162Y TB163Y
28-080	Motor bakım kapağı Engine Inspection Lid x	TB162W TB163W	TB162Z TB163Z	TB162X TB163X	TB162Y TB163Y
28-085	Sürücü bölmesi kapısı Drivers Compartment Lid x			TB162X TB163X	TB162Y TB163Y
28-090	Kilit Lock x	TB162W TB163W			
28-091	Kilit Lock x		TB162Z TB163Z		
28-092	Kilit Lock x			TB162X TB163X	
28-093	Kilit Lock x				TB162Y TB163Y
28-100	Kapı motoru hava hattı Door engine air line x	TB162W TB163W	TB162Z TB163Z	TB162X TB163X	TB162Y TB163Y

29 BAKIM KAPAKLARI
INSPECTION LIDS
x

29-010	Motor bakım kapağı Engine Inspection Lid x	TB162W TB163W	TB162Z TB163Z	TB162X TB163X	TB162Y TB163Y
29-020	Şanzuman ve vites bakım kapağı Transmission & gearshift inspection lid Wartungsdeckel, Getriebe und Gang	TB162W TB163W	TB162Z TB163Z	TB162X TB163X	TB162Y TB163Y
29-030	Yakıt tankı bakım kapağı Fuel tank inspection lid x	TB162W TB163W	TB162Z TB163Z	TB162X TB163X	TB162Y TB163Y
29-040	Hava filtresi bakım kapağı Air filter inspection lid x	TB162W TB163W	TB162Z TB163Z	TB162X TB163X	TB162Y TB163Y
29-060	Hava tankı bakım kapağı Air tank inspection lid x	TB162W TB163W	TB162Z TB163Z	TB162X TB163X	TB162Y TB163Y

30 İÇ
INTERIOR
x

30-010	Ön trim Front Trimming x	TB162W TB163W	TB162Z TB163Z	TB162X TB163X	TB162Y TB163Y

30-020	Tavan trim panelleri Roof Trimming Panel x	TB162W TB163W		TB162X TB163X	
30-025	Tavan trim panelleri Roof Trimming Panel x		TB162Z TB163Z		TB162Y TB163Y
30-030	İç yan trim Inside Trimming x	TB162W TB163W			
30-031	İç yan trim Inside Trimming x			TB162X TB163X	
30-035	İç yan trim Inside Trimming x		TB162Z TB163Z		
30-036	İç yan trim Inside Trimming x				TB162Y TB163Y
30-040	Yolcu rafları Luggage racks x	TB162W TB163W		TB162X TB163X	
30-040	Yolcu rafları Luggage racks x		TB162Z TB163Z		TB162Y TB163Y
30-050	Raf kapakları Rack lids x	TB162W TB163W	TB162Z TB163Z	TB162X TB163X	TB162Y TB163Y
30-051	Raf kapakları Rack lids x		TB162Z TB163Z		
30-052	Raf kapakları Rack lids x	TB162W TB163W			
30-060	Bölmeler ve tırabzan Partitions and parapet x	TB162W TB163W	TB162Z TB163Z		
30-061	Bölmeler ve tırabzan - İsrail Partitions and parapet - Israel x	TB162W			
30-062	Bölmeler ve tırabzan Partitions and parapet x				TB162Y TB163Y
30-063	Bölmeler ve tırabzan Partitions and parapet x				TB162Y TB163Y
30-064	Bölmeler Partitions x		TB162Z TB163Z		
30-065	Bölme - İsrail Partition - Israel x	TB162W			
30-070	Güneşlik, iç ayna, saat+termometre Sun visor, inside mirror, clock + thermometer x	TB162W TB163W	TB162Z TB163Z	TB162X TB163X	TB162Y TB163Y

30-080	Hava kanalı iç paneli Panel inner, air duct x	TB162W TB163W			
30-081	Hava kanalı iç paneli Panel inner, air duct x			TB162X TB163X	
30-082	Hava kanalı iç paneli Panel inner, air duct x		TB162Z TB163Z		
30-083	Hava kanalı iç paneli Panel inner, air duct x				TB162Y TB163Y
30-090	Perde Curtain x	TB162W TB163W			
30-091	Perde Curtain x		TB162Z TB163Z		
30-092	Perde Curtain x			TB162X TB163X	
30-093	Perde Curtain x				TB162Y TB163Y
30-100	Halı Carpet x	TB162W TB163W	TB162Z TB163Z	TB162X TB163X	TB162Y TB163Y
30-110	Döşeme trimi Flooring trim x	TB162W TB163W	TB162Z TB163Z	TB162X TB163X	TB162Y TB163Y

31 DIŞ EXTERIOR

x

31-010	Dış dikiz aynası - tek cam Rear view mirror outside - single glass x	TB162W TB163W	TB162Z TB163Z	TB162X TB163X	TB162Y TB163Y
31-011	Dış dikiz aynası - çift cam Rear view mirror outside - double glass x	TB162W TB163W	TB162Z TB163Z	TB162X TB163X	TB162Y TB163Y
31-020	Tampon ve çeki kancası Bumper & hook x	TB162W TB163W	TB162Z TB163Z	TB162X TB163X	TB162Y TB163Y
31-030	Silecek kolları Windshield wiper x	TB162W TB163W	TB162Z TB163Z	TB162X TB163X	TB162Y TB163Y
31-040	Silecek su hortumu ve tank Winshield washer x	TB162W TB163W	TB162Z TB163Z	TB162X TB163X	TB162Y TB163Y
31-050	Klima tavan üstü yan panelleri - Safkar klima A/C roof panel, side x	TB162W TB163W	TB162Z TB163Z		
31-051	Klima tavan üstü yan panelleri - Sütrak klima A/C roof panel, side x	TB162W TB163W	TB162Z TB163Z		

31-052	Klima tavan üstü yan panelleri - Safkar klima A/C roof panel, side x				TB162X TB163X	TB162Y TB163Y
31-053	Klima tavan üstü yan panelleri - Slovenya A/C roof panel, side - Slovenia x		TB162Z TB163Z			
31-060	Tavan havalandırma (acil çıkış) ve motor fan Emergency exit & motor fan x	TB162W TB163W	TB162Z TB163Z	TB162X TB163X	TB162Y TB163Y	
31-070	Lastik, jant ve jant kapağı Tire, Rim & Wheel Cover Disc x	TB162W TB163W	TB162Z TB163Z	TB162X TB163X	TB162Y TB163Y	
31-080	Yedek lastik taşıyıcı Spare tire carrier x	TB162W TB163W	TB162Z TB163Z	TB162X TB163X	TB162Y TB163Y	
31-090	Çamurluk ve tozluk Mud guard and splash x	TB162W TB163W	TB162Z TB163Z	TB162X TB163X	TB162Y TB163Y	
31-090	Etiket Label x	TB162W TB163W	TB162Z TB163Z	TB162X TB163X	TB162Y TB163Y	

32 İSKELET
SKELETON
x

32-010	Ön gövde Front Body x	TB162W TB163W	TB162Z TB163Z	TB162X TB163X	TB162Y TB163Y	
32-020	Arka gövde Rear Body x	TB162W TB163W	TB162Z TB163Z	TB162X TB163X	TB162Y TB163Y	
32-021	Arka gövde Rear Body x			TB162X TB163X	TB162Y TB163Y	
32-030	Yan gövde Side Body x	TB162W TB163W	TB162Z TB163Z	TB162X TB163X	TB162Y TB163Y	
32-040	Tavan Roof x	TB162W TB163W				
32-041	Tavan Roof x		TB162Z TB163Z			
32-042	Tavan Roof x			TB162X TB163X		
32-043	Tavan Roof x				TB162Y TB163Y	
32-050	Yan panel Side panel x	TB162W TB163W	TB162Z TB163Z	TB162X TB163X	TB162Y TB163Y	
32-070	Bagaj çerçevesi Luggage frame x	TB162W TB163W				

32-071	Bagaj çerçevesi Luggage frame x			TB162X TB163X	
32-072	Bagaj çerçevesi Luggage frame x		TB162Z TB163Z		
32-073	Bagaj çerçevesi Luggage frame x				TB162Y TB163Y

33 ŞASİ ve TABAN
FRAME & SILL
x

33-010	Ön şasi Front Frame x	TB162W TB163W	TB162Z TB163Z	TB162X TB163X	TB162Y TB163Y
33-020	Orta şasi ve taban Center frame and sill x	TB162W TB163W	TB162Z TB163Z	TB162X TB163X	TB162Y TB163Y
33-030	Arka şasi Rear Frame x	TB162W TB163W	TB162Z TB163Z	TB162X TB163X	TB162Y TB163Y
33-040	Ön taban Front Sill x	TB162W TB163W	TB162Z TB163Z	TB162X TB163X	TB162Y TB163Y
33-060	Arka taban Rear Sill x	TB162W TB163W	TB162Z TB163Z	TB162X TB163X	TB162Y TB163Y
33-070	Arka duvar Rear Wall x	TB162W TB163W	TB162Z TB163Z	TB162X TB163X	TB162Y TB163Y
33-080	Ön basamak Front step x	TB162W TB163W	TB162Z TB163Z	TB162X TB163X	TB162Y TB163Y
33-090	Orta basamak Center step x	TB162W TB163W	TB162Z TB163Z		
33-091	Orta basamak Center step x			TB162X TB163X	TB162Y TB163Y
33-110	Taban tahtaları Floorboards x	TB162W TB163W			
33-111	Taban tahtaları Floorboards x			TB162X TB163X	
33-112	Taban tahtaları Floorboards x		TB162Z TB163Z		
33-113	Taban tahtaları Floorboards x				TB162Y TB163Y
33-120	Motor ve retarder alt muhafazası Engine and retarder under cover x	TB162W TB163W	TB162Z TB163Z	TB162X TB163X	TB162Y TB163Y

34 RÖLE, KABLO ve DİĞER
RELAY, WIRING & OTHER
x

34-010	Akü ve kablo Battery & cable x	TB162W TB163W	TB162Z TB163Z	TB162X TB163X	TB162Y TB163Y
34-020	Ön sigorta paneli Relay panel - front x	TB162W TB163W	TB162Z TB163Z	TB162X TB163X	TB162Y TB163Y
34-030	Arka sigorta paneli Relay panel - rear x	TB162W TB163W	TB162Z TB163Z	TB162X TB163X	TB162Y TB163Y
34-050	Korna ve düdük Horn And Buzzer x	TB162W TB163W	TB162Z TB163Z	TB162X TB163X	TB162Y TB163Y
34-060	Kablo tesisatı Harness Wiring x	TB162W TB163W	TB162Z TB163Z		
34-061	Kablo tesisatı Harness Wiring x				TB162Y TB163Y
34-062	Kablo tesisatı Harness Wiring x			TB162X TB163X	

35 ÖZEL DONATIMLAR
SPECIAL EQUIPMENTS
x

35-010	Ön güzergah tabelası Front destination display sign x	TB162W TB163W	TB162Z TB163Z		
35-011	Yan güzergah tabelası Side destination display sign x	TB162W TB163W	TB162Z TB163Z	TB162X TB163X	TB162Y TB163Y
35-020	Tuvalet - sökülebilir Toilet - pull out x	TB162W TB163W	TB162Z TB163Z		
35-021	Tuvalet - sabit Toilet - fixed x	TB162W TB163W	TB162Z TB163Z	TB162X TB163X	TB162Y TB163Y
35-022	Sütrak Tuvalet - yedek parçaları Toilet, Sütrak - spare part x	TB162W TB163W	TB162Z TB163Z	TB162X TB163X	TB162Y TB163Y
35-030	Buzdolabı Refrigerator x	TB162W TB163W	TB162Z TB163Z	TB162X TB163X	TB162Y TB163Y
35-031	Buzdolabı - Frenzel Refrigerator - Frenzel x	TB162W TB163W	TB162Z TB163Z	TB162X TB163X	TB162Y TB163Y
35-040	Mutfak ünitesi - TM Kitchen unit - TM x	TB162W TB163W	TB162Z TB163Z		
35-041	Mutfak ünitesi - TM Kitchen unit - TM x	TB162W TB163W	TB162Z TB163Z		

35-042	Mutfak ünitesi - Frenzel Kitchen unit - Frenzel x	TB162W TB163W	TB162Z TB163Z		
35-050	Televizyon, video Television, video x	TB162W TB163W	TB162Z TB163Z		
35-051	LCD monitör LCD monitör x	TB162W TB163W	TB162Z TB163Z	TB162X TB163X	TB162Y TB163Y
35-052	Film oynayıcı DVD DVD player x	TB162W TB163W	TB162Z TB163Z	TB162X TB163X	TB162Y TB163Y
35-053	Kanallı ses yayın sistemi - BLUAPUNKT Multi- channel audio system - BLUAPUNKT x	TB162W TB163W	TB162Z TB163Z		
35-060	Geri gidiş kamerası ve monitör Back reverse camera and monitor x	TB162W TB163W	TB162Z TB163Z		
35-065	Anten Antenna x	TB162W TB163W	TB162Z TB163Z	TB162X TB163X	TB162Y TB163Y
35-070	Uyku kabini Sleeping cabin x	TB162W TB163W	TB162Z TB163Z		
35-100	Yangın söndürücü Fire extinguisher x	TB162W TB163W	TB162Z TB163Z	TB162X TB163X	TB162Y TB163Y
35-120	Emniyet çekici ve askı Safety hammer & hanger x	TB162W TB163W	TB162Z TB163Z	TB162X TB163X	TB162Y TB163Y
35-130	Masa Table x	TB162W TB163W	TB162Z TB163Z		

Önsöz

Bu katalog, **TEMSA A.Ş.** - **ADANA / TÜRKİYE** tesislerinde montajı yapılan klimalı, **MAN** tabanlı **TB162 Euro Safari** otobüslerin yedek parça bilgilerini kapsamaktadır.
Bu katalog, fabrikadan çıktığı şekildeki araçlar içindir.

Bu katalog , yedek parça teminine yardımcı olması için, " TEMSA A.Ş. – YEDEK PARÇA DEPARTMANI. ISTANBUL / TÜRKİYE " tarafından hazırlanmıştır.

Adres:
Kısıklı Cad.Şehit Teğmen İsmail
Moray Sk. No:2/1 81190
Altunizade
İSTANBUL - TÜRKİYE
Tel. +90 (216) 326 31 10 PBX
Faks +90 (216) 325 60 40

http://www.temsa.com.tr
e-mail: spareparts@temsa.com.tr

Temsa A.Ş. bu katalogda gösterilen özellikleri, dizayn ve düzenini hiçbir kayda tabi olmadan değiştirebilir.

Genel bilgi

Sayfa düzeni hakkında açıklamalar;

1.	GRUP NO	Aracın belirli bölgelerini gösteren ana grupların altındaki alt grup no'larıdır.
2.	GRUP ADI	Alt grupların adıdır.
3.	SIRA NO	Resimlerdeki her parça için verilen sembol numarasıdır.
4.	PARÇA NO	Alt gruplarda yer alan parçaların numarasıdır.
5.	PARÇA ADI	Parçaların adıdır.
6.	ARAÇ NO	Parçaların yürürlüğe girdiği ve/veya çıktığı araç no'sudur. Bazen de yürürlüğe girdiği ve/veya çıktığı tarihi belirtir. Örnek: başlangıç 9908 (1998 yılının Ağustos ayı)
7.	R/P DEĞİŞEBİLİRLİK	Araç değişime uğradığında, eski ve yeni parçaların birbiri ile karşılıklı değişebilirliği aşağıdaki sembollerle bu hanede ifade edilir.

' O ' Hem yeni, hem de eski parça tüm araçlarda birbiri yerine kullanılabilir.

' X ' Yeni parça sadece devreye girdiği araç ve o araçtan sonra üretilen araçlarda, eski parça sadece eski araçlarda kullanılır.

' Y ' Yeni parça hem eski, hem de yeni araçlarda kullanılır. Eski parça sadece eski araçlarda kullanılır.

' Z ' Parça revize edildiği veya beraber çalıştığı diğer parçalarla uyumlu hale getirildiği takdirde hem eski, hem de yeni araçlarda kullanılabilir.

Foreword

This parts catalog, contains spare parts information for Euro **Safari TB162** buses with air conditioner, (substructure **MAN**) assembled by **TEMSA A.Ş., ADANA / TURKEY**.

This catalog is prepared for vehicles originally manufactured by TEMSA A.Ş.

This catalog is prepared to assist the dealers in providing spare parts supplied by TEMSA A.Ş. – SPARE PARTS DEPARTMENT, ISTANBUL - TURKEY.

Address:
Kısıklı Cad. Şehit Teğmen İsmail
Moray Sk. No:2/1 81190
Altunizade
ISTANBUL - TURKEY
Phone +90 (216) 326 31 10 PBX
Fax +90 (216) 325 60 40

http://www.temsa.com.tr
e-mail: spareparts@temsa.com.tr

All rights reserved . No part of this publication / CD may be reproduced , stored in a retrieval system or transmitted in any form or by any means, without permission in writing of TEMSA A.Ş. / TURKEY

General information

How to use the lists and illustrations;

1. GROUP NO — Identifies the main-sub group no. An antimate knowledge of the main-sub groups and group titels facilitates the retrieval of parts numbers.
2. GROUP NAME — Indicates the title of the main-sub group, which shows the names of the representative part, equipments or the like contained in each group.
3. ITEM NO — Indicates the item no for each parts
4. PART NO — Indicates the part number used for the applicable vehicle model.
5. PART NAME — Indicates the part name used for the vehicle.
6. VEHICLE NO — Indicates vehicle number of beginning the production of the vehicle incoporating the applicable part and that of ending their production. Sometimes indicates the date of beginning the production of the vehicle incorporating the applicable part and that of ending their production. Example: from 9808 (1998 from the beginning of August)
7. REPLACEABILITY — When a part has been modified, the interchangeability between new and old parts are indicated by using in the following symbols.

   - **‘ O ‘** Both new and old parts are usable on new and old vehicles.
   - **‘ X ‘** New parts are usable only on new vehicles and the old parts only on old vehicles.
   - **‘ Y ‘** New parts can be used on both and new old vehicles but old parts can be used only on old vehicles.
   - **‘ Z ‘** The parts are not usable on either new or old vehicles but they are usable if they are reworked or combined with other parts.

TB162W, TB163W — Araç şasi numarası ve model kodu tanımı

Şasi no:
Şasi numarası 17 karakterdir.

1	2	3	4	5	6	7	8	9	10	11	12	13	14	15	16	17
N	**L**	**T**	**T**	**B**	**1**	**6**	**2**	**W**	*	**1**	*	*	*	*	*	*
İlk 3 karakter, ISO3780 standardına uygunluğu TSE den alınmıştır			4.~ 9. karakterler, araç model kodu						10. ~ 17. karakterler, şasi seri numaraları ve model yılı							

1	2	3	4	5	6	7	8	9	10	11	12	13	14	15	16	17
N	**L**	**T**	**T**	**B**	**1**	**6**	**3**	**W**	*	**1**	*	*	*	*	*	*
İlk 3 karakter, ISO3780 standardına uygunluğu TSE den alınmıştır			4.~ 9. karakterler, araç model kodu						10. ~ 17. karakterler, şasi seri numaraları ve model yılı							

Araç model kodu:
Model kodu 6 karakterdir.

Kapasite (2 karakter)	Geliştirme (1 karakter)	Motor modeli (2 karakter)	Dingil açıklığı (1karakter)
TB	**1**	**62**	**W**
> 16,8 ton 4x2		D2866LOH28 360ps MAN	5,9~6,2

Kapasite (2 karakter)	Geliştirme (1 karakter)	Motor modeli (2 karakter)	Dingil açıklığı (1karakter)
TB	**1**	**63**	**W**
> 16,8 ton 4x2		D2866LOH29 410ps MAN	5,9~6,2

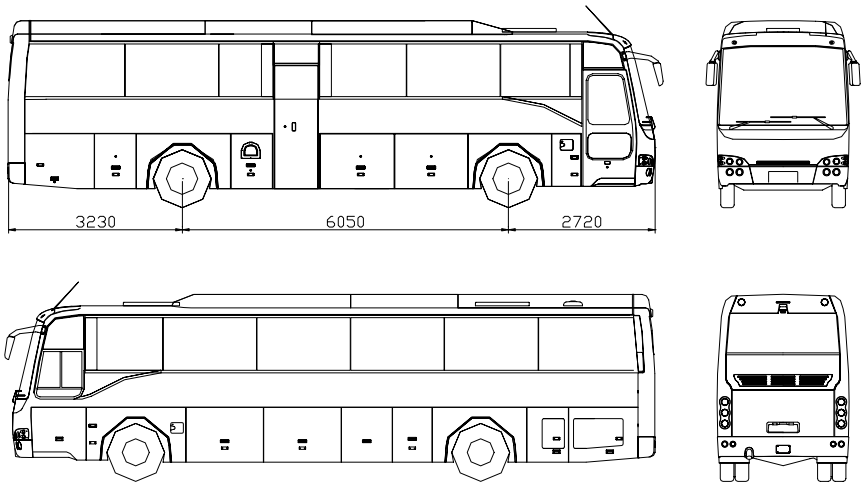

Şasi no:
Şasi numarası 17 karakterdir.

1	2	3	4	5	6	7	8	9	10	11	12	13	14	15	16	17
N	**L**	**T**	**T**	**B**	**1**	**6**	**2**	**Z**	*	**1**	*	*	*	*	*	*
İlk 3 karakter, ISO3780 standardına uygunluğu TSE den alınmıştır			4.~ 9. karakterler, araç model kodu						10. ~ 17. karakterler, şasi seri numaraları ve model yılı							

1	2	3	4	5	6	7	8	9	10	11	12	13	14	15	16	17
N	**L**	**T**	**T**	**B**	**1**	**6**	**3**	**Z**	*	**1**	*	*	*	*	*	*
İlk 3 karakter, ISO3780 standardına uygunluğu TSE den alınmıştır			4.~ 9. karakterler, araç model kodu						10. ~ 17. karakterler, şasi seri numaraları ve model yılı							

Araç model kodu:
Model kodu 6 karakterdir.

Kapasite (2 karakter)	Geliştirme (1 karakter)	Motor modeli (2 karakter)	Dingil açıklığı (1karakter)
TB	**1**	**62**	**Z**
> 16,8 ton 4x2		D2866LOH28 360ps MAN	6,8~7,1

Kapasite (2 karakter)	Geliştirme (1 karakter)	Motor modeli (2 karakter)	Dingil açıklığı (1karakter)
TB	**1**	**63**	**Z**
> 16,8 ton 4x2		D2866LOH29 410ps MAN	6,8~7,1

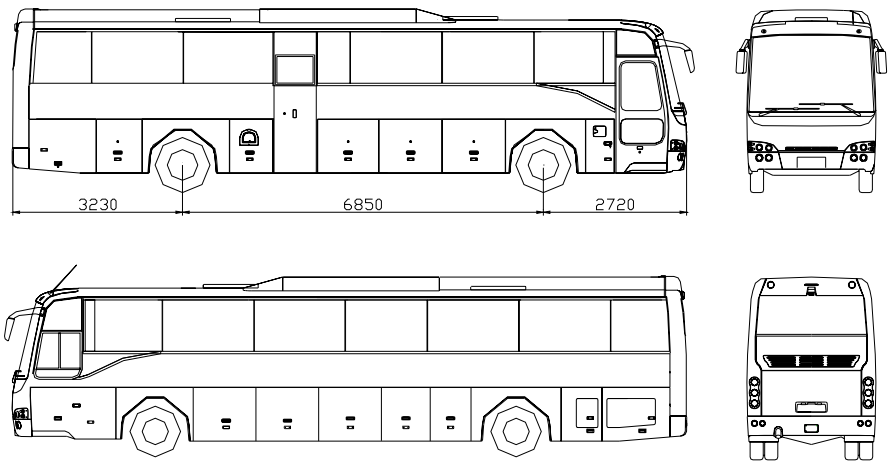

TB162X, TB163X — Araç şasi numarası ve model kodu tanımı

Şasi no:
Şasi numarası 17 karakterdir.

1	2	3	4	5	6	7	8	9	10	11	12	13	14	15	16	17
N	**L**	**T**	**T**	**B**	**1**	**6**	**2**	**X**	*	**1**	*	*	*	*	*	*
İlk 3 karakter, ISO3780 standardına uygunluğu TSE den alınmıştır			4.~ 9. karakterler, araç model kodu						10. ~ 17. karakterler, şasi seri numaraları ve model yılı							

1	2	3	4	5	6	7	8	9	10	11	12	13	14	15	16	17
N	**L**	**T**	**T**	**B**	**1**	**6**	**3**	**X**	*	**1**	*	*	*	*	*	*
İlk 3 karakter, ISO3780 standardına uygunluğu TSE den alınmıştır			4.~ 9. karakterler, araç model kodu						10. ~ 17. karakterler, şasi seri numaraları ve model yılı							

Araç model kodu:
Model kodu 6 karakterdir.

Kapasite (2 karakter)	Geliştirme (1 karakter)	Motor modeli (2 karakter)	Dingil açıklığı (1karakter)
TB	**1**	**62**	**X**
> 16,8 ton 4x2		D2866LOH28 360ps MAN	5,9~6,2

Kapasite (2 karakter)	Geliştirme (1 karakter)	Motor modeli (2 karakter)	Dingil açıklığı (1karakter)
TB	**1**	**63**	**X**
> 16,8 ton 4x2		D2866LOH29 410ps MAN	5,9~6,2

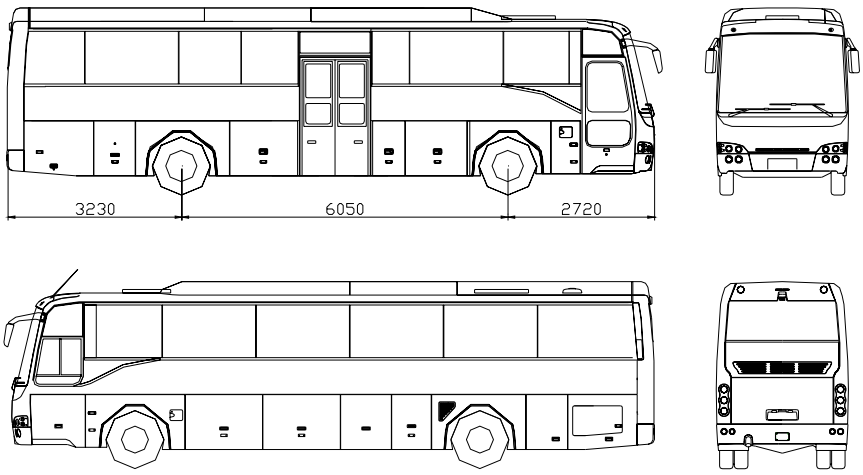

Şasi no:
Şasi numarası 17 karakterdir.

1	2	3	4	5	6	7	8	9	10	11	12	13	14	15	16	17
N	**L**	**T**	**T**	**B**	**1**	**6**	**2**	**Y**	*	**1**	*	*	*	*	*	*
İlk 3 karakter, ISO3780 standardına uygunluğu TSE den alınmıştır			4.~ 9. karakterler, araç model kodu						10. ~ 17. karakterler, şasi seri numaraları ve model yılı							

1	2	3	4	5	6	7	8	9	10	11	12	13	14	15	16	17
N	**L**	**T**	**T**	**B**	**1**	**6**	**3**	**Y**	*	**1**	*	*	*	*	*	*
İlk 3 karakter, ISO3780 standardına uygunluğu TSE den alınmıştır			4.~ 9. karakterler, araç model kodu						10. ~ 17. karakterler, şasi seri numaraları ve model yılı							

Araç model kodu:
Model kodu 6 karakterdir.

Kapasite (2 karakter)	Geliştirme (1 karakter)	Motor modeli (2 karakter)	Dingil açıklığı (1karakter)
TB	**1**	**62**	**Y**
> 16,8 ton 4x2		D2866LOH28 360ps MAN	6,8~7,1

Kapasite (2 karakter)	Geliştirme (1 karakter)	Motor modeli (2 karakter)	Dingil açıklığı (1karakter)
TB	**1**	**63**	**Y**
> 16,8 ton 4x2		D2866LOH29 410ps MAN	6,8~7,1

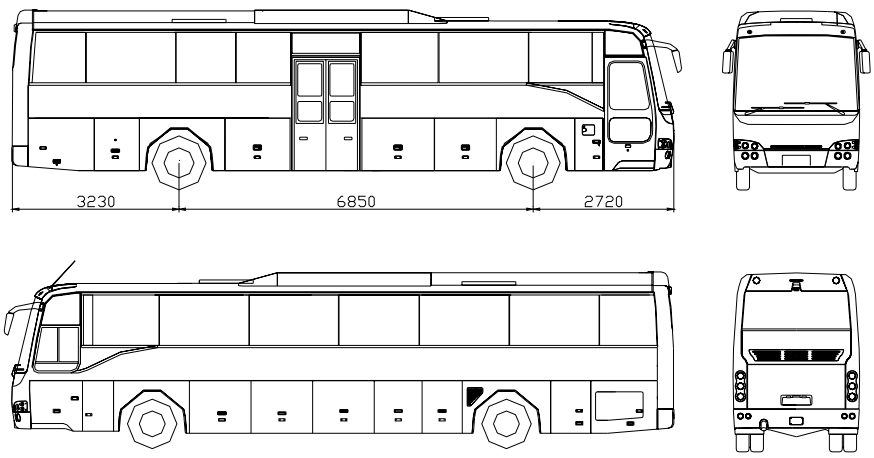

TB162W, TB163W Vehicle chassis number and model code identification

Chassis number:
Chassis number is composed of 17 characters.

1	2	3	4	5	6	7	8	9	10	11	12	13	14	15	16	17
N	**L**	**T**	**T**	**B**	**1**	**6**	**2**	**W**	*	**1**	*	*	*	*	*	*
First 3 character is obtained from TSE (Inst. Of Turkish Stds.) confirming ISO 3780			4th to 9th characters are vehicle model code						10th to 17th characters are chassis serial numbers and model year							

1	2	3	4	5	6	7	8	9	10	11	12	13	14	15	16	17
N	**L**	**T**	**T**	**B**	**1**	**6**	**3**	**W**	*	**1**	*	*	*	*	*	*
First 3 character is obtained from TSE (Inst. Of Turkish Stds.) confirming ISO 3780			4th to 9th characters are vehicle model code						10th to 17th characters are chassis serial numbers and model year							

Vehicle model code:
Model code is composed of 6 characters.

Capacity (2 characters)	Improvement (1 character)	Engine model (2 characters)	Wheelbase (1 character)
TB	**1**	**62**	**W**
> 16,8 ton 4x2		D2866LOH28 360ps MAN	5,9~6,2

Capacity (2 characters)	Improvement (1 character)	Engine model (2 characters)	Wheelbase (1 character)
TB	**1**	**63**	**W**
> 16,8 ton 4x2		D2866LOH29 410ps MAN	5,9~6,2

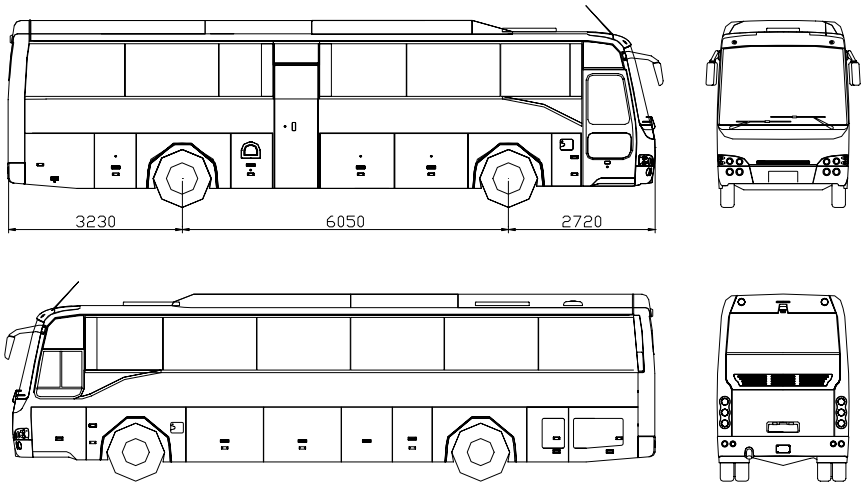

TB162Z, TB163Z Vehicle chassis number and model code identification

Chassis number:
Chassis number is composed of 17 characters.

1	2	3	4	5	6	7	8	9	10	11	12	13	14	15	16	17
N	**L**	**T**	**T**	**B**	**1**	**6**	**2**	**Z**	*	**1**	*	*	*	*	*	*
First 3 character is obtained from TSE (Inst. Of Turkish Stds.) confirming ISO 3780			4th to 9th characters are vehicle model code						10th to 17th characters are chassis serial numbers and model year							

1	2	3	4	5	6	7	8	9	10	11	12	13	14	15	16	17
N	**L**	**T**	**T**	**B**	**1**	**6**	**3**	**Z**	*	**1**	*	*	*	*	*	*
First 3 character is obtained from TSE (Inst. Of Turkish Stds.) confirming ISO 3780			4th to 9th characters are vehicle model code						10th to 17th characters are chassis serial numbers and model year							

Vehicle model code:
Model code is composed of 6 characters.

Capacity (2 characters)	Improvement (1 character)	Engine model (2 characters)	Wheelbase (1 character)
TB	**1**	**62**	**Z**
> 16,8 ton 4x2		D2866LOH28 360ps MAN	6,8~7,1

Capacity (2 characters)	Improvement (1 character)	Engine model (2 characters)	Wheelbase (1 character)
TB	**1**	**63**	**Z**
> 16,8 ton 4x2		D2866LOH29 410ps MAN	6,8~7,1

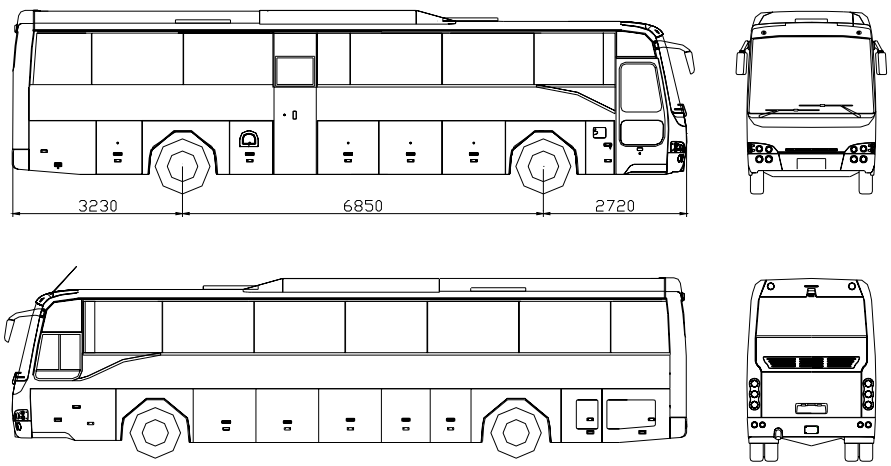

TB162X, TB163X Vehicle chassis number and model code identification

Chassis number:
Chassis number is composed of 17 characters.

1	2	3	4	5	6	7	8	9	10	11	12	13	14	15	16	17
N	**L**	**T**	**T**	**B**	**1**	**6**	**2**	**X**	*	**1**	*	*	*	*	*	*
First 3 character is obtained from TSE (Inst. Of Turkish Stds.) confirming ISO 3780			4th to 9th characters are vehicle model code						10th to 17th characters are chassis serial numbers and model year							

1	2	3	4	5	6	7	8	9	10	11	12	13	14	15	16	17
N	**L**	**T**	**T**	**B**	**1**	**6**	**3**	**X**	*	**1**	*	*	*	*	*	*
First 3 character is obtained from TSE (Inst. Of Turkish Stds.) confirming ISO 3780			4th to 9th characters are vehicle model code						10th to 17th characters are chassis serial numbers and model year							

Vehicle model code:
Model code is composed of 6 characters.

Capacity (2 characters)	Improvement (1 character)	Engine model (2 characters)	Wheelbase (1 character)
TB	**1**	**62**	**X**
> 16,8 ton 4x2		D2866LOH28 360ps MAN	5,9~6,2

Capacity (2 characters)	Improvement (1 character)	Engine model (2 characters)	Wheelbase (1 character)
TB	**1**	**63**	**X**
> 16,8 ton 4x2		D2866LOH29 410ps MAN	5,9~6,2

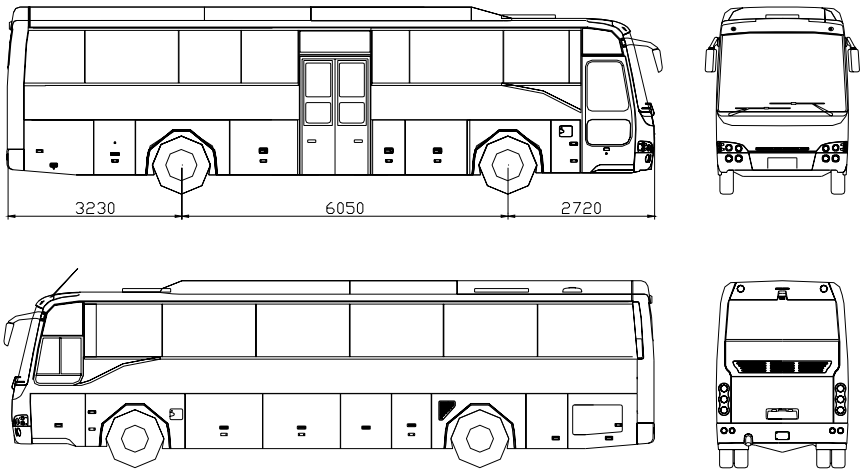

TB162Y, TB163Y Vehicle chassis number and model code identification

Chassis number:
Chassis number is composed of 17 characters.

1	2	3	4	5	6	7	8	9	10	11	12	13	14	15	16	17
N	**L**	**T**	**T**	**B**	**1**	**6**	**2**	**Y**	*	**1**	*	*	*	*	*	*
First 3 character is obtained from TSE (Inst. Of Turkish Stds.) confirming ISO 3780			4th to 9th characters are vehicle model code						10th to 17th characters are chassis serial numbers and model year							

1	2	3	4	5	6	7	8	9	10	11	12	13	14	15	16	17
N	**L**	**T**	**T**	**B**	**1**	**6**	**3**	**Y**	*	**1**	*	*	*	*	*	*
First 3 character is obtained from TSE (Inst. Of Turkish Stds.) confirming ISO 3780			4th to 9th characters are vehicle model code						10th to 17th characters are chassis serial numbers and model year							

Vehicle model code:
Model code is composed of 6 characters.

Capacity (2 characters)	Improvement (1 character)	Engine model (2 characters)	Wheelbase (1 character)
TB	**1**	**62**	**Y**
> 16,8 ton 4x2		D2866LOH28 360ps MAN	6,8~7,1

Capacity (2 characters)	Improvement (1 character)	Engine model (2 characters)	Wheelbase (1 character)
TB	**1**	**63**	**Y**
> 16,8 ton 4x2		D2866LOH29 410ps MAN	6,8~7,1

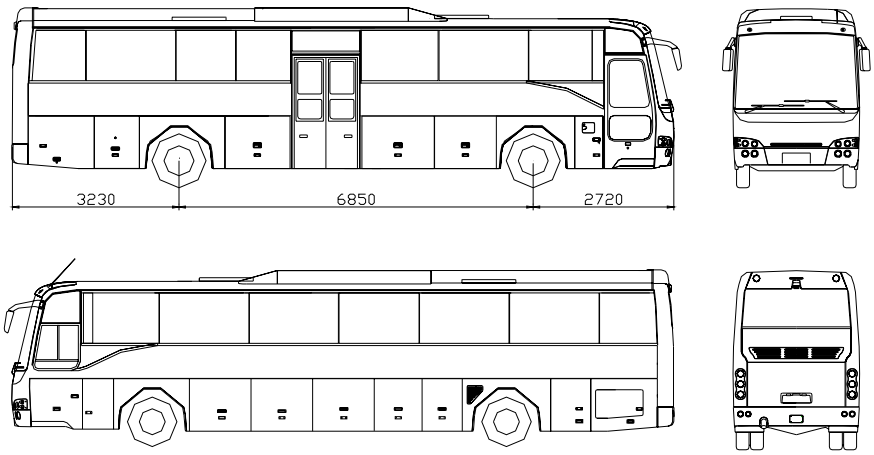

01 MOTOR ENGINE x

01-010	Motor Engine x	TB162W TB163W	TB162Z TB163Z	TB162X TB163X	TB162Y TB163Y

TEMSA	Motor Engine	Drw.no: Vehicle Model: **TB162W, TB162Z, TB162X, TB162Y** **TB163W, TB163Z, TB163X, TB163Y**	**01-010** RevDate: Page: 1

Pos	Part Number	Turkish	English	German	Qty	R/P	From	Up To	Original Number Supplier
*	D2866 LOH28	MOTOR KOMPLE V48 360PS - MAN	ENGINE ASSY V48 360PS - MAN		1		1		TB162W-TB162X TB162Y-TB162Z
*	D2866 LOH29	MOTOR KOMPLE V48 410PS - MAN	ENGINE ASSY V48 410PS - MAN		1		1		TB163W-TB163X TB163Y-TB163Z

19.12.2003	Type A51 00	Pet 04.92	Chassis No.	Group 010-0	Figure 01 0148
18:24	Table engine mounting		Reference No. 81.#0870-0038 00.00 - 11.00 engine mounting		
Seite: 001					

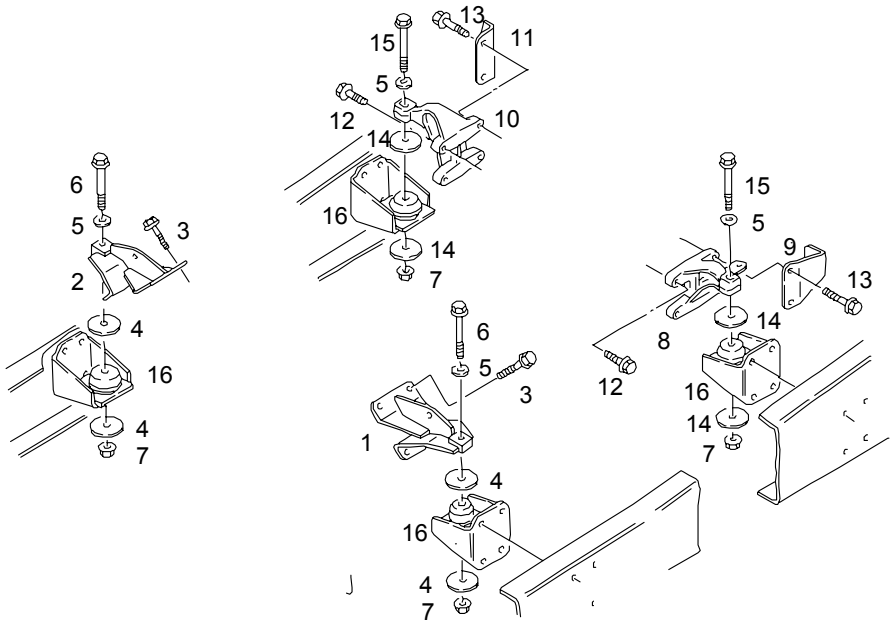

Pos	Part No.	Description	Pat	ME	All	Stk
1	TE771110-70	engine support assembly left		0		1
2	TE771110-71	engine support assembly right		0		1
3	06.02813-5013	hex lock screw M16X1,5X40-10.9-MAN183-B1		0		8
4	81.90712-0839	washer 17X105X4-ST37-2-NXX		0		4
5	81.90710-0758	washer 17X35X5-QSTE340TM-GRUND		0		4
6	06.01494-6526	hex shoulder stud M16X1,5X170-10.9-A-MAN183-B1		0		2
7	06.11222-6311	hex collar lock nut M16X1,5-A3C		0		4

19.12.2003	Type A51 00	Pet 04.92	Chassis No.	Group 010-0	Figure 01 0148
18:24	Table engine mounting		Reference No. 81.#0870-0038 00.00 - 11.00 engine mounting		
Seite: 002					

Pos	Part No.	Description	Pat	ME	All	Stk
8	TE771120-70	engine support left		0		1
9	81.19101-5046	counterpiece assembly		0		1
10	TE771120-71	engine support right		0		1
11	81.19101-5042	bracket assembly		0		1
12	06.02816-2614	hex lock screw M14X45-12.9-MAN183-PHR		0		4
13	06.02816-2615	hex lock screw M14X50-12.9-MAN183-PHR		0		4
14	81.90712-0840	washer 17X115X6-ST37-2-NXX		0		4
15	06.01494-6524	hex shoulder stud M16X1,5X150-10.9-A-MAN183-B1		0		2
16	81.96210-6071	engine bracket left front/ right front		0		2
	81.96210-0553	engine bracket left rear / right rear		0		2

17.12.2003	Type V48 00	Pet	Chassis No.	Group 010-0	Figure 01 8370
14:49	Table cover for camshaft on crankcase		Reference No. 51.#0010-0664 00.00 - 00.00 engine D2866 LOH27/28 without EVB		
Seite: 001					

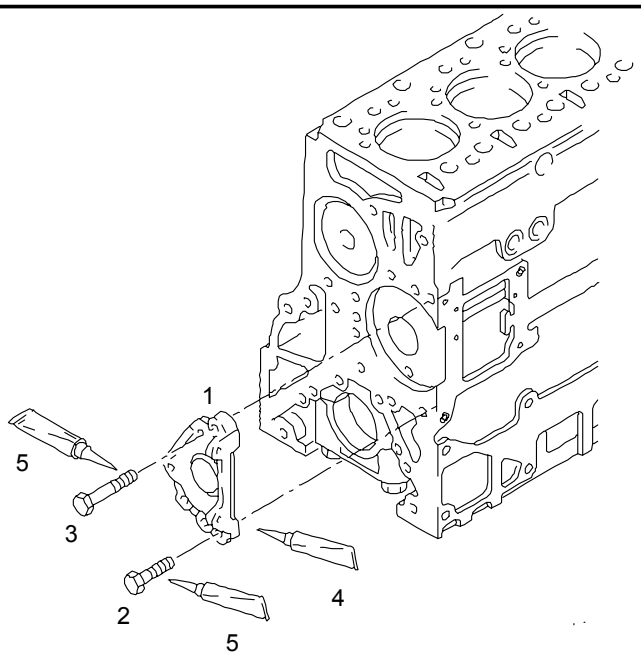

Pos	Part No.	Description	Pat	ME	All	Stk
1	51.01112-0124	cover		0		1
2	06.01283-5215	hex bolt M10X25-8.8-MAN183-B1		0		5
3	06.01283-5220	hex bolt M10X45-8.8-MAN183-B1		0		1
4	04.10394-9272	sealants 300 ML - cartridge with nozzle		M		NB
5	04.10160-9131	adhesive 50 ML LOCTITE 270 green		H		NB

17.12.2003	Type V48 00	Pet	Chassis No.	Group 010-0	Figure 01 8370
14:49	Table cover for camshaft on crankcase		Reference No. 51.#0010-0722 00.00 - 00.00 engine D2866 LOH27/28/35 with EVB		
Seite: 001					

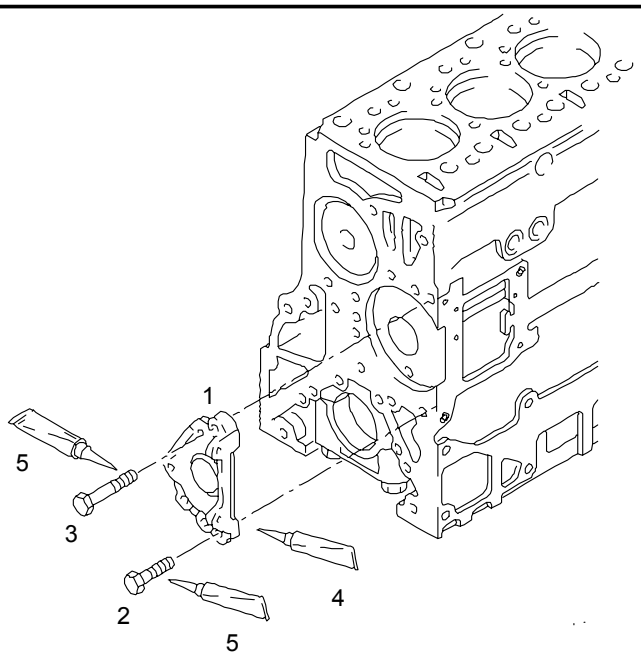

Pos	Part No.	Description	Pat	ME	All	Stk
1	51.01112-0124	cover		0		1
2	06.01283-5215	hex bolt M10X25-8.8-MAN183-B1		0		5
3	06.01283-5220	hex bolt M10X45-8.8-MAN183-B1		0		1
4	04.10394-9272	sealants 300 ML - cartridge with nozzle		M		NB
5	04.10160-9131	adhesive 50 ML LOCTITE 270 green		H		NB

17.12.2003	Type V48 00	Pet	Chassis No.	Group 010-0	Figure 01 8299
14:51	Table crankcase		Reference No. 51.#0030-0136 00.00 - 00.00 crankcase not for power take-off flywheel D2866 LOH..		
Seite: 001					

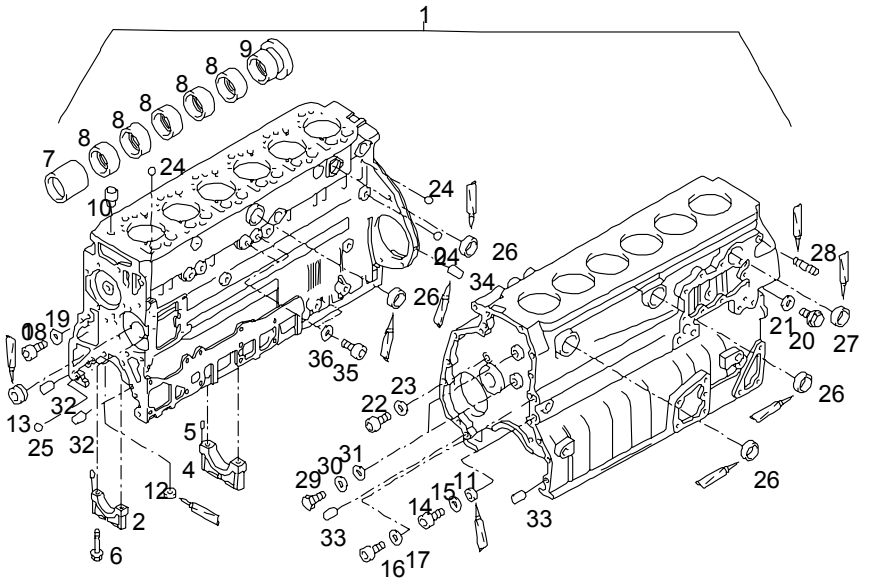

Pos	Part No.	Description	Pat	ME	All	Stk
1	51.01102-6289	crankcase assembly		0		1
2	51.01105-6045	>bearing cap >main bearing		0		6
3	51.91301-0084	>>dowel pin		0		12
4	51.01105-6044	>bearing cap >thrust bearing		0		1
5	51.91301-0084	>>dowel pin		0		2
6	51.90020-0293	>hex collar bolt >M18X2X153-10.9		0		14
7	51.04410-0139	>camshaft bush >1		0		1
8	51.04410-0121	>camshaft bush >2-5/6		0		5

17.12.2003	Type V48 00	Pet	Chassis No.	Group 010-0	Figure 01 8299
14:51	Table crankcase		Reference No. 51.#0030-0136 00.00 - 00.00 crankcase not for power take-off flywheel D2866 LOH..		
Seite: 002					

Pos	Part No.	Description	Pat	ME	All	Stk
9	51.04410-0160	>camshaft bush >sputtered		0		1
	06.21641-0605	>plug >G7	2795	0		6
10	51.91701-0274	>bush >17,00 MM		0		12
11	51.90310-0118	>drain plug >M22X1,5X9-5.8		0		1
12	51.90310-0254	>drain plug >with hexagon socket >M22X1,5-ST-ZNPHR3F		0		1
13	06.08023-0204	>drain plug >with hexagon socket >M16X1,5-ST-ZNPHR3F		0		1
	04.90300-9025	>>adhesive >>250 ML >>bottle		H		NB
		>>for >>item number >>11 - 13				*
14	51.90310-0149	>drain plug >M26X1,5X12-ST		0		1
15	06.56190-0726	>seal >A26X31-CU	1400	0		1
15	06.56631-0112	>seal >with elastomer lip >26,7X34,93X2-ST/FPM1-80		0		1
16	06.08042-0208	>drain plug >M24X1,5-ST-ZNPHR3F		0		1
17	06.56190-0722	>seal >A24X29-CU	1400	0		1
17	06.56631-0111	>seal >with elastomer lip >24,7X32X2-ST/FPM1-80		0		1

17.12.2003	Type V48 00	Pet	Chassis No.	Group 010-0	Figure 01 8299
14:51	Table crankcase		Reference No. 51.#0030-0136 00.00 - 00.00 crankcase not for power take-off flywheel D2866 LOH..		
Seite: 003					

Pos	Part No.	Description	Pat	ME	All	Stk
18	06.08042-0607	>drain plug >M22X1,5-ST-A3C		0		1
19	06.56190-0718	>seal >A22X27-CU	1400	0		1
19	06.56631-0110	>seal >with elastomer lip >22,7X30X2-ST/FPM1-80		0		1
20	06.08042-0605	>drain plug >M18X1,5-ST-A3C		0		1
21	06.56190-0713	>seal >A18X24-CU	1400	0		1
21	06.56631-0109	>seal >with elastomer lip >18,7X26X1,5-ST/FPM1-80		0		1
22	06.08042-0604	>drain plug >M16X1,5-ST-A3C		0		1
23	06.56631-0107	>seal >with elastomer lip >16,7X24X1,5-ST/FPM1-80		0		NB
	04.90300-9025	>>adhesive >>250 ML >>bottle		H		NB
		>>for >>item number >>14;16;18;20;22				*
24	06.31649-0006	>ball >6,350G20P2		0		3
25	06.31639-0002	>ball >8,5G20P2		0		1
26	51.91606-0045	>cover >A62,2/12,5-X5CRNI1810N		0		4
26	51.91606-0063	>cover >A63,1/12,5-X5CRNI1810N		0		NB

17.12.2003	Type V48 00	Pet	Chassis No.	Group 010-0	Figure 01 8299
14:51	Table crankcase		Reference No. 51.#0030-0136 00.00 - 00.00 crankcase not for power take-off flywheel D2866 LOH..		
Seite: 004					

Pos	Part No.	Description	Pat	ME	All	Stk
27	51.91606-0053	>cover >A50,2/10,5-X5CRNI1810N		0		1
27	51.91606-0062	>cover >A51,1/10-X5CRNI1810N		0		NB
	04.90300-9009	>>adhesive >>200M-FL250G >>bottle		D		NB
		>>for >>item number >>26 + 27				*
28	51.90210-5000	>stud >M16-M16X1,5X25MK-8.8-ZNPHR3F		0		1
	04.10160-9107	>>adhesive >>50 ML TYP 640 >>bottle		H		NB
29	06.01289-0111	>hex bolt >M12X16-8.8-MAN183-A3C		0		2
30	51.90710-0160	>washer >13X29,8X4-ST37-2-PAB		0		2
31	51.96601-0380	>sealing packing >asbestos-free		0		2
32	06.22022-1013	>dowel pin >8M6X24-ST50-2K		0		2
33	06.22022-3513	>dowel pin >16H8X24-ST50-2K		0		2
34	06.22061-0506	>pin, grooved >4X16-ST	2595	0		1
	04.90300-9019	>>adhesive >>90 G >>tube	2595	U		NB
34	06.21641-0602	>plug >G4	3196	0		1
	06.22180-0505	>pin >4X10	3196	0		1

17.12.2003	Type V48 00	Pet	Chassis No.	Group 010-0	Figure 01 8299
14:51	Table crankcase		Reference No. 51.#0030-0136 00.00 - 00.00 crankcase not for power take-off flywheel D2866 LOH..		
Seite: 005					

Pos	Part No.	Description	Pat	ME	All	Stk
35	06.08042-0603	>drain plug >M14X1,5-ST-A3C		0		2
36	06.56190-0706	>seal >A14X20-CU	1400	0		2
36	06.56631-0106	>seal >with elastomer lip >14,7X22X1,5-ST/FPM1-80		0		2
	51.00900-6602	set of seals simplified version asbestos-free		S		1

17.12.2003	Type V48 00	Pet	Chassis No.	Group 010-0	Figure 01 8300
14:52	Table cylinder liner and oil sprayer nozzle		Reference No. 51.#0030-0136 00.00 - 00.00 crankcase not for power take-off flywheel D2866 LOH..		
Seite: 001					

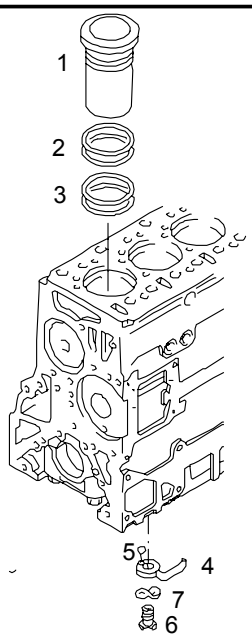

Pos	Part No.	Description	Pat	ME	All	Stk
1	51.01201-0309	cylinder liner		0		6
		or				*
1	51.01201-0344	cylinder liner collar height oversize 0.2 mm 145,0 X 10,27 MM		0		6
		or				*
1	51.01201-0324	cylinder liner collar height oversize 0.5 mm 145,5 X 10,57 MM		0		6
		or				*
1	51.01201-0326	cylinder liner repair stage 1 oversize diameter 0.50 mm 145,5 X 10,07 MM		0		6
		or				*

17.12.2003	Type V48 00	Pet	Chassis No.	Group 010-0	Figure 01 8300
14:52	Table cylinder liner and oil sprayer nozzle		Reference No. 51.#0030-0136 00.00 - 00.00 crankcase not for power take-off flywheel D2866 LOH..		
Seite: 002					

Pos	Part No.	Description	Pat	ME	All	Stk
1	51.01201-0327	cylinder liner repair stage 2 oversize diameter 1.00 mm 146,0 X 10,07 MM		0		6
	51.01222-0002	shim for bushes 147,5X153,8X0,05-X12CRNI177		0		NB
2	51.96501-0493	toric seal 138X2,1-FPM2-70		0		12
3	51.96501-0522	toric seal 144X4-FPM2-70		0		12
4	51.01601-5066	oil sprayer nozzle	1497	0		6
4	51.01601-5083	oil sprayer nozzle		0		6
5	06.31630-0311	>ball >3G20		0		12
6	51.05405-7017	oil pressure valve	1497	0		6
6	51.05405-7044	oil pressure valve assembly		0		6
7	06.16043-0213	spring washer B14-FST-A3C		0		6
	51.00900-6603	set of seals simplified version asbestos-free		S		1

17.12.2003	Type V48 00	Pet	Chassis No.	Group 010-0	Figure 01 8440
14:53	Table drain plug and seal on crankcase			Reference No. 51.#0410-0513 00.00 - 00.00 engine mounting without engine support D2866 LOH27-35 D2876 LOH02	
Seite: 001					

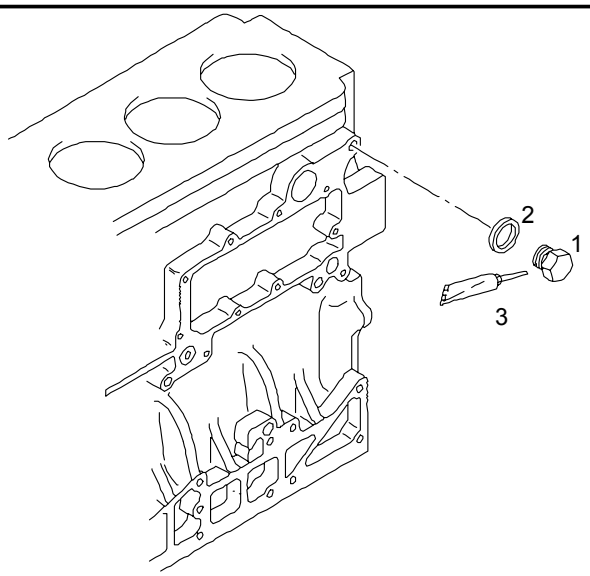

Pos	Part No.	Description	Pat	ME	All	Stk
1	51.90310-0155	drain plug M16X15-9SMNPB28K		0		1
2	06.56631-0107	seal with elastomer lip 16,7X24X1,5-ST/FPM1-80		0		1
3	04.10160-9189	sealants 5 L canister		A		NB

17.12.2003	Type V48 00	Pet	Chassis No.	Group 010-0	Figure 01 8453
14:54	Table engine breather		Reference No. 51.#0440-0206 00.00 - 00.00 engine breather for air intake D2866 LOH27-29/34/35 D2876 LOH02/03		
Seite: 001					

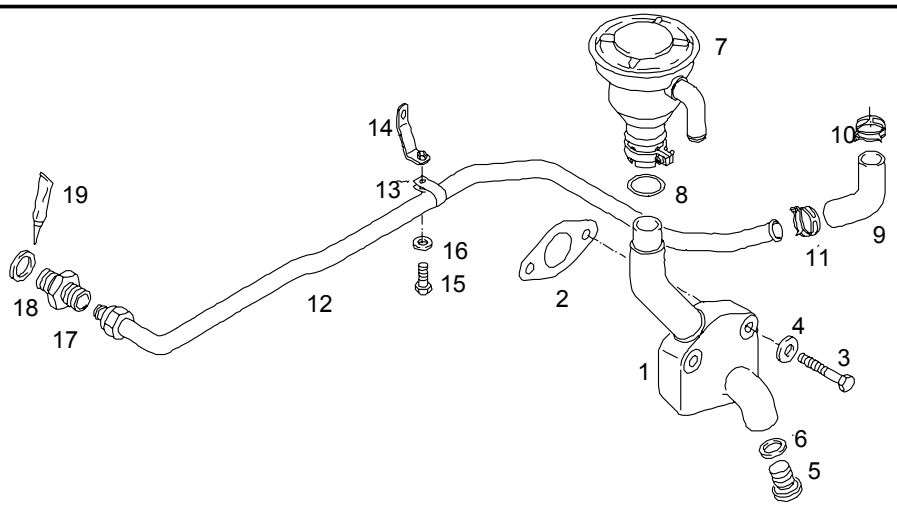

Pos	Part No.	Description	Pat	ME	All	Stk
1	51.01802-0332	vent elbow		0		1
2	06.56254-3706	gasket 40X68X1,0-AFOE4-M3219-G1		0		1
3	06.01013-7219	hex shoulder stud M10X70-8.8-MAN183-B1		0		2
4	06.15013-0412	washer A10,5X20X2-200HV-MAN183-B1		0		2
5	06.08042-0609	drain plug M26X1,5-ST-A3C		0		1
6	06.56631-0112	seal with elastomer lip 26,7X34,93X2-ST/FPM1-80		0		1
7	51.01804-7034	oil separator		0		1
8	51.96501-0337	toric seal 36,5X3,5-NBR3-60		0		1

17.12.2003	Type V48 00	Pet	Chassis No.	Group 010-0	Figure 01 8453
14:54	Table engine breather			Reference No. 51.#0440-0206 00.00 - 00.00 engine breather for air intake D2866 LOH27-29/34/35 D2876 LOH02/03	
Seite: 002					

Pos	Part No.	Description	Pat	ME	All	Stk
9	51.96301-0095	shaped hose		0		1
10	51.97440-0126	spring clip 29X12-CK75		0		1
11	51.97440-0132	spring clip 26X12-CK75		0		1
12	51.01802-5469	bleeder line soldered with bead		0		1
13	06.67150-0107	>mounting clamp >18		0		1
14	51.97480-5093	bracket		0		1
15	06.01283-5112	hex bolt M8X18-8.8-MAN183-B1		0		1
16	06.15013-0411	washer A8,4X16X1,6-200HV-MAN183-B1		0		1
17	06.71060-2106	straight union L18A-M-ST-A4C		0		1
18	06.56631-0110	seal with elastomer lip 22,7X30X2-ST/FPM1-80		0		1
19	04.10160-9029	sealants 350 ML can		D		NB

17.12.2003	Type V48 00	Pet	Chassis No.	Group 010-0	Figure 01 8303
14:55	Table front cover for crankshaft on crankcase		Reference No. 51.#0010-0686 00.00 - 00.00 engine D2866 LOH29/34 with EVB		
Seite: 001					

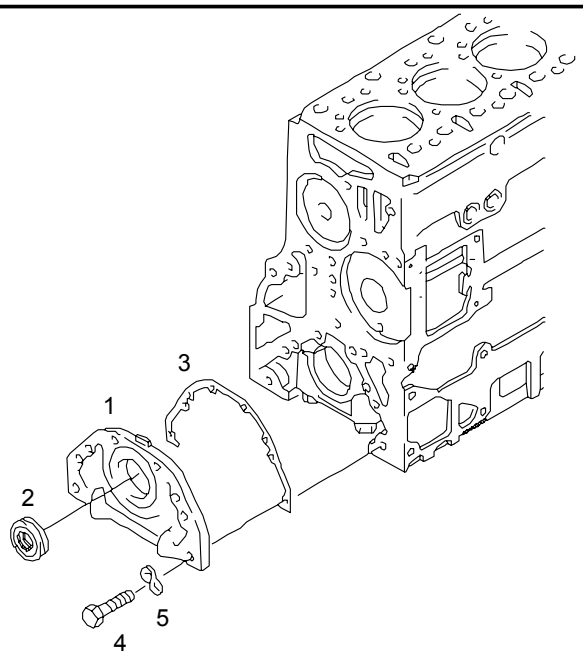

Pos	Part No.	Description	Pat	ME	All	Stk
1	51.01501-6018	housing cover assembly		0		1
2	51.01501-6016	>seal >for crankshaft >front >PTFE		0		1
	51.01510-6004	>radial shaft seal >assembly >105X130X12-ACM/PTFE/FILZ		0		1
	51.02130-0032	>race		0		1
3	51.01903-0251	gasket asbestos-free		0		1
4	06.01283-5115	hex bolt M8X25-8.8-MAN183-B1		0		6
5	06.16043-0210	spring washer B8-FST-A3C		0		6

17.12.2003	Type V48 00	Pet	Chassis No.	Group 010-0	Figure 08 9401
14:55	Table heater flange with fish plate			Reference No. 51.#0010-0686 00.00 - 00.00 engine D2866 LOH29/34 with EVB	
Seite: 001					

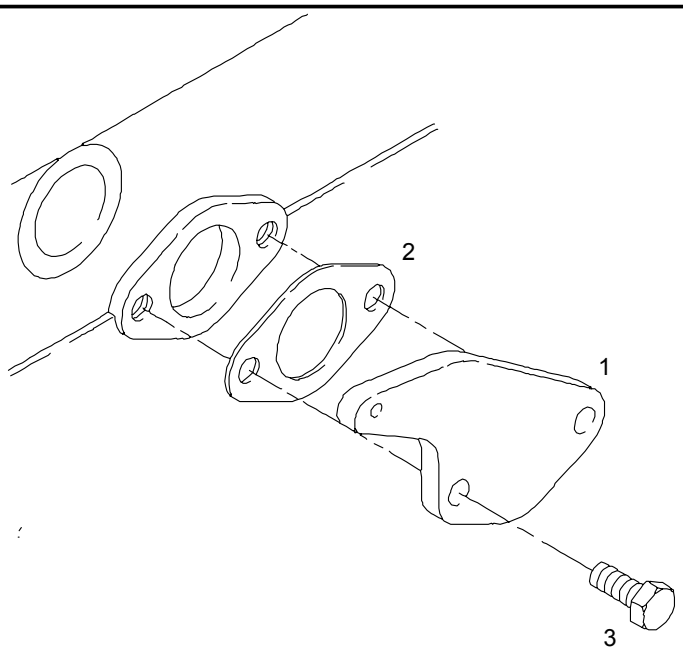

Pos	Part No.	Description	Pat	ME	All	Stk
1	51.98112-0238	flange		0		1
2	06.56254-3706	gasket 40X68X1,0-AFOE4-M3219-G1		0		1
3	06.01283-5217	hex bolt M10X30-8.8-MAN183-B1		0		2

17.12.2003	Type V48 00	Pet	Chassis No.	Group 010-0	Figure 01 9174
14:56	Table timing case mounting parts		Reference No. 51.#0270-0236 00.00 - 00.00 timing case not for power take-off D2866 LOH.. D2876 LOH02		
Seite: 001					

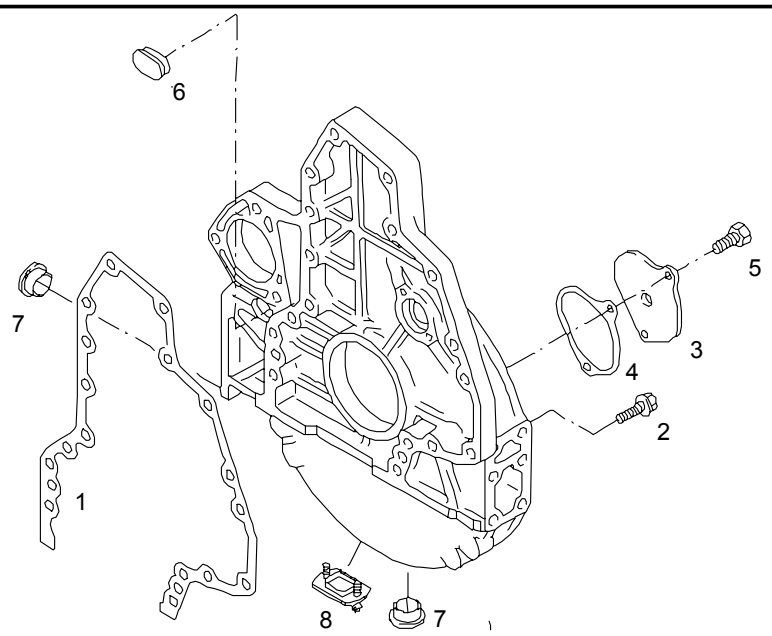

Pos	Part No.	Description	Pat	ME	All	Stk
1	51.01903-0252	gasket asbestos-free		0		1
2	51.90020-0182	hex collar bolt M10X54-12.9		0		13
2	51.90020-0154	hex collar bolt M10X70-10.9		0		3
2	51.90710-0019	washer 11X23X6-9SMNPB28K		0		3
3	51.01402-0058	cover timing case		0		1
4	51.01903-0235	gasket asbestos-free		0		1
5	06.01283-5114	hex bolt M8X22-8.8-MAN183-B1		0		2
6	51.96002-0004	rubber plug 46/38X19-59/51-CR2-70		0		1

17.12.2003	Type V48 00	Pet	Chassis No.	Group 010-0	Figure 01 9174
14:56	Table timing case mounting parts		Reference No. 51.#0270-0236 00.00 - 00.00 timing case not for power take-off D2866 LOH.. D2876 LOH02		
Seite: 002					

Pos	Part No.	Description	Pat	ME	All	Stk
7	51.96002-0003	plug		0		2
8	51.91605-0127	cover		0		1
	06.07241-0505	tapping screw,hex with collar ST4,2X16-C-A3C		0		2

17.12.2003	Type V48 00	Pet	Chassis No.	Group 010-0	Figure 01 9173
14:56	Table timing case replacement group		Reference No. 51.#0270-0236 00.00 - 00.00 timing case not for power take-off D2866 LOH.. D2876 LOH02		
Seite: 001					

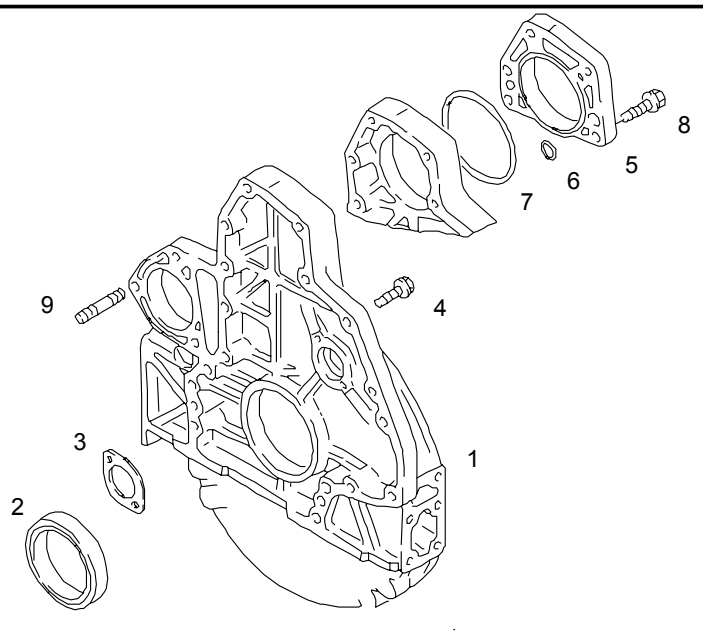

Pos	Part No.	Description	Pat	ME	All	Stk
1	51.01401-6192	timing case assembly with flange connection for speed sensor		0		1
2	51.01510-0206	>radial shaft seal >120X140X13-ACM/PTFE		0		1
3	51.90720-0109	>thrust washer	2898	0		1
3	51.90720-0200	>thrust washer		0		1
4	51.90020-0159	>hex lock screw >M8X8,4-12.9-PAB		0		2
5	51.01402-0032	>cover		0		1
6	06.56936-0347	>toric seal >7X3N-FPM1-70-GN		0		1
7	51.96501-0324	>toric seal >126X3-FPM1-80-GN		0		1

17.12.2003	Type V48 00	Pet	Chassis No.	Group 010-0	Figure 01 9173
14:56	Table timing case replacement group		Reference No. 51.#0270-0236 00.00 - 00.00 timing case not for power take-off D2866 LOH.. D2876 LOH02		
Seite: 002					

Pos	Part No.	Description	Pat	ME	All	Stk
8	51.90020-0154	>hex collar bolt >M10X70-10.9		0		5
9	06.06145-0308	>stud >M12-M12X1,5X30-8.8		0		3
	06.22022-3513	>dowel pin >16H8X24-ST50-2K		0		2

17.12.2003	Type V48 00	Pet	Chassis No.	Group 020-0	Figure 02 8165
14:58	Table crankshaft		Reference No. 51.#0190-0360 00.00 - 00.00 crankshaft with v-belt pulley (3X10) D2866 LOH27-29/35		
Seite: 001					

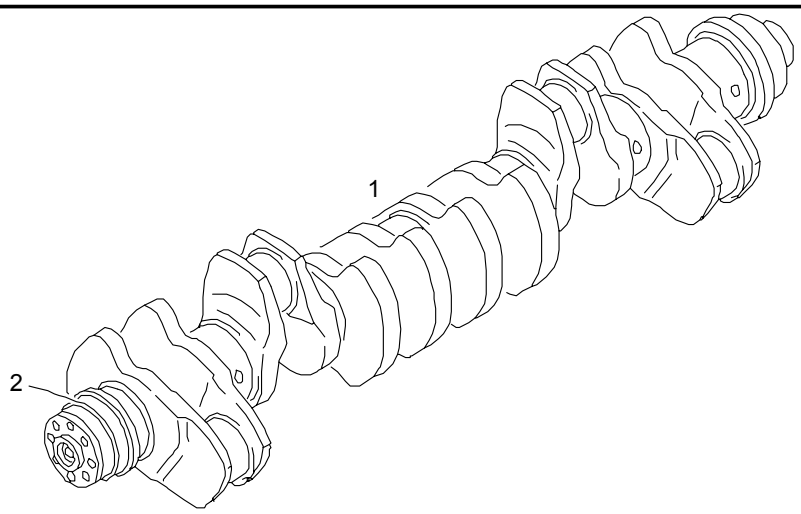

Pos	Part No.	Description	Pat	ME	All	Stk
1	51.02101-6043	crankshaft assembly		0		1
2	51.02130-0032	>race		0		1
	04.10160-9049	>>sealants >>50 ML >>bottle		H		NB

17.12.2003	Type V48 00	Pet	Chassis No.	Group 020-0	Figure 02 9467
14:58	Table crankshaft mounting parts		Reference No. 51.#0190-0360 00.00 - 00.00 crankshaft with v-belt pulley (3X10) D2866 LOH27-29/35		
Seite: 001					

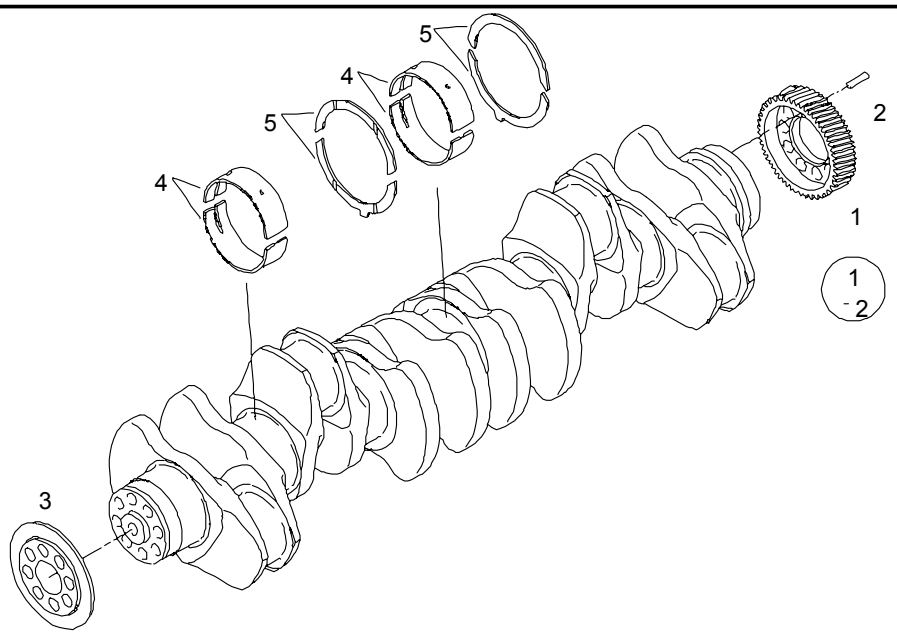

Pos	Part No.	Description	Pat	ME	All	Stk
1	51.02115-6060	timing gear - crankshaft assembly		0		1
2	06.22220-1217	>spiral dowel pin >8X35-ST		0		1
3	51.01505-5009	slinger		0		1
4	51.01113-6073	main bearing assembly normal		S		7
4	51.01113-6074	main bearing assembly normal 1 = 0,10 mm		S		7
4	51.01113-6075	main bearing assembly repair stage 1 = 0,25 mm		S		7
4	51.01113-6076	main bearing assembly repair stage 2 = 0,50 mm		S		7

17.12.2003	Type V48 00	Pet	Chassis No.	Group 020-0	Figure 02 9467	
14:58	Table crankshaft mounting parts		Reference No. 51.#0190-0360 00.00 - 00.00 crankshaft with v-belt pulley (3X10) D2866 LOH27-29/35			
Seite: 002						

Pos	Part No.	Description	Pat	ME	All	Stk
4	51.01113-6077	main bearing assembly repair stage 3 = 0,75 mm		S		7
4	51.01113-6078	main bearing assembly repair stage 4 = 1,00 mm		S		7
5	51.01114-6110	thrust washer set normal		S		2
5	51.01114-6111	thrust washer set repair stage 1		S		2
5	51.01114-6112	thrust washer set repair stage 2		S		2

17.12.2003	Type V48 00	Pet	Chassis No.	Group 020-0	Figure 02 8192
14:59	Table flywheel		Reference No. 51.#0100-0768 00.00 - 00.00 flywheel for automatic transmission VOITH D864.3 + EDC		
Seite: 001					

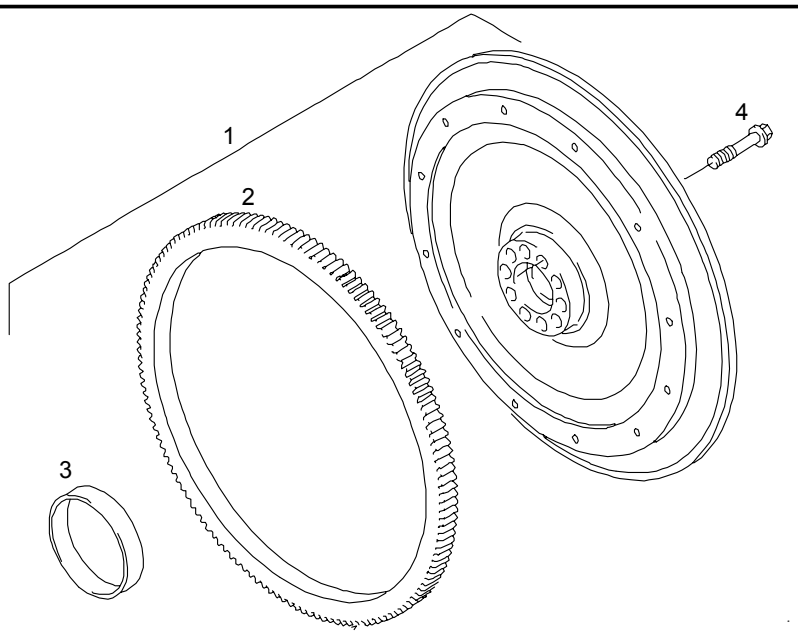

Pos	Part No.	Description	Pat	ME	All	Stk
1	51.02301-6031	flywheel assembly FUER VOITH D864.3 (F.EDC)		0		1
2	51.02310-0096	>starter ring gear		0		1
3	51.02130-0013	>race		0		1
	04.10160-9049	>>sealants >>50 ML >>bottle		H		NB
4	51.90020-0298	hex collar bolt M16X1,5X73-10.9-ZNPHR3F		0		10

17.12.2003	Type V48 00	Pet	Chassis No.	Group 020-0	Figure 02 8010
15:00	Table piston with connecting rod		Reference No. 51.#0010-0686 00.00 - 00.00 engine D2866 LOH29/34 with EVB		
Seite: 001					

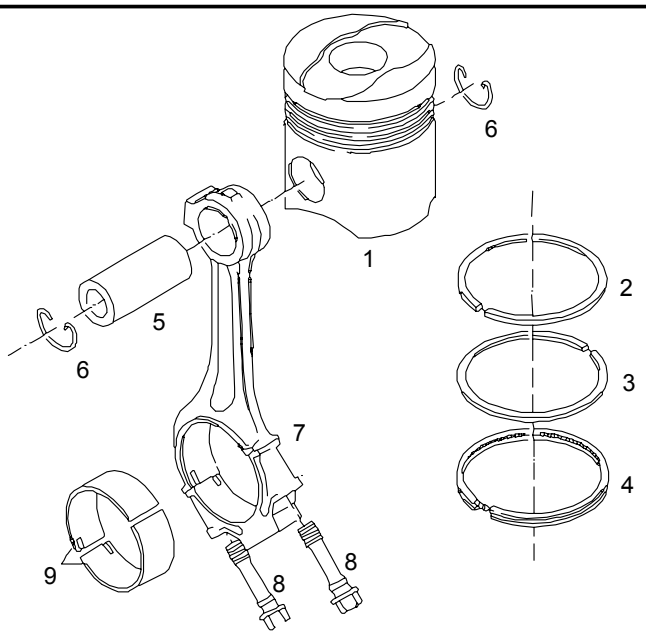

Pos	Part No.	Description	Pat	ME	All	Stk
1	51.02511-7385	automotive engine piston assembly normal 128,00 MM		0		6
1	51.02511-7386	automotive engine piston assembly undersize 0,20 mm 128,00 MM		0		6
1	51.02511-7387	automotive engine piston assembly undersize 0,40 mm 128,00 MM		0		6
1	51.02511-7388	automotive engine piston assembly undersize 0,60 mm 128,00 MM		0		6
2	51.02503-0781	>keystone ring		0		6
3	51.02503-0554	>taper face compression ring		0		6

17.12.2003	Type V48 00	Pet	Chassis No.	Group 020-0	Figure 02 8010
15:00	Table piston with connecting rod		Reference No. 51.#0010-0686 00.00 - 00.00 engine D2866 LOH29/34 with EVB		
Seite: 002					

Pos	Part No.	Description	Pat	ME	All	Stk
4	51.02503-0720	>bevelled oil scraper ring >128 X 4		0		6
5	51.02502-0098	>piston pin		0		6
6	51.90810-0011	>circlip >52X1,75-FST		0		12
7	51.02401-6281	connecting rod assembly		0		6
8	51.90490-0021	>screw >with external torx >M14X1,5X65,5-10.9-E18-ZNPHR		0		12
9	51.02410-6511	conrod bearing assembly normal sputtered		P		6
9	51.02410-6627	conrod bearing assembly normal 1 = 0,10 mm sputtered		P		6
9	51.02410-6628	conrod bearing assembly repair stage 1 = 0,25 mm sputtered		0		6
9	51.02410-6629	conrod bearing assembly repair stage 2 = 0,50 mm sputtered		P		6
9	51.02410-6630	conrod bearing repair stage 3 = 0,75 mm sputtered		P		6
9	51.02410-6631	conrod bearing assembly repair stage 4 = 1,00 mm sputtered		P		6

17.12.2003	Type V48 00	Pet	Chassis No.	Group 020-0	Figure 02 8237
15:00	Table v-belt pulley and vibration damper		Reference No. 51.#0190-0360 00.00 - 00.00 crankshaft with v-belt pulley (3X10) D2866 LOH27-29/35		
Seite: 001					

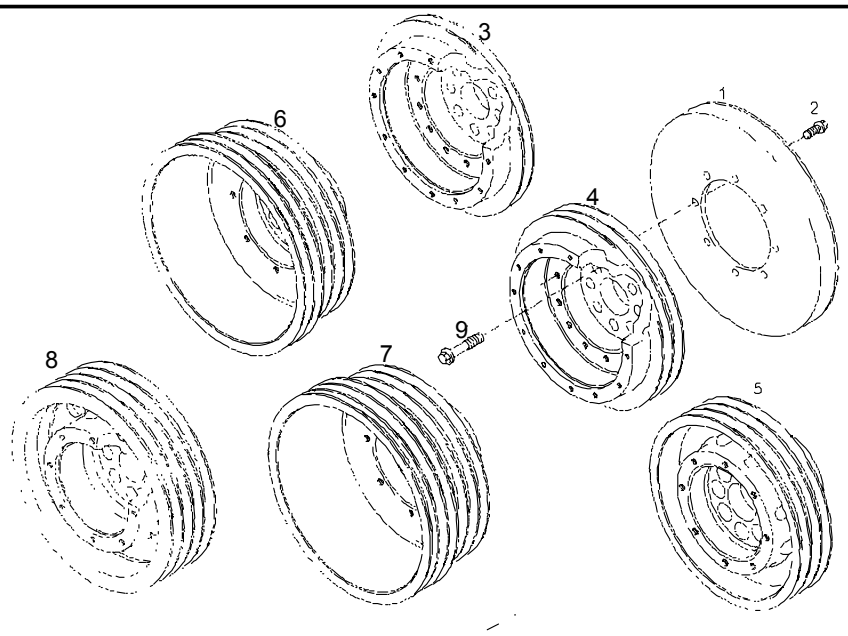

Pos	Part No.	Description	Pat	ME	All	Stk
1	51.02201-0081	vibration damper		0		1
2	06.03216-6404	hex flange bolt M10X20-10.9-MAN183-PHR		0		8
3	51.02601-0527	v-belt pulley		0		1
5	51.02601-0497	v-belt pulley 3Z249,6-8X74		0		1
9	51.90020-0245	hex collar bolt M16X1,5X45-10.9-ZNPHR3F		0		8

17.12.2003	Type V48 00	Pet	Chassis No.	Group 030-0	Figure 03 8069
15:01	Table cylinder head assembly		Reference No. 51.#0010-0686 00.00 - 00.00 engine D2866 LOH29/34 with EVB		
Seite: 001					

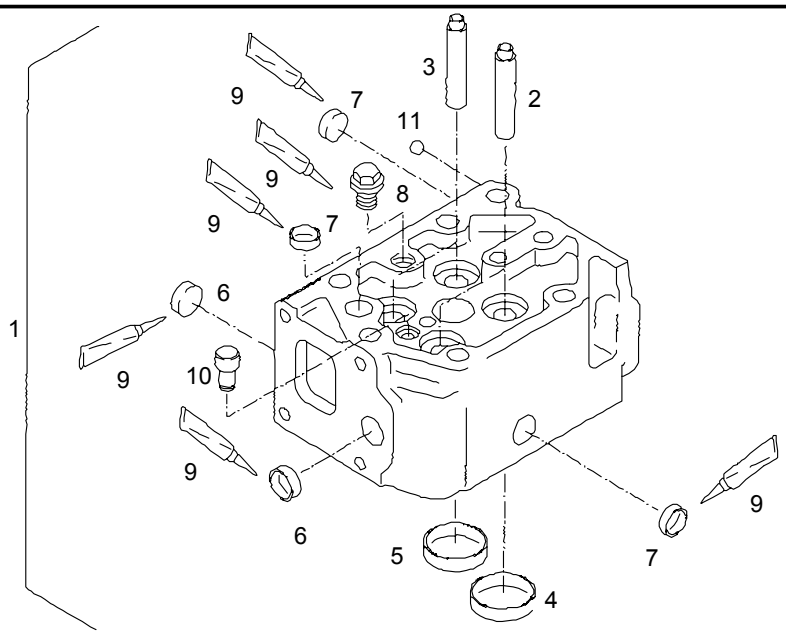

Pos	Part No.	Description	Pat	ME	All	Stk
1	51.03101-6824	cylinder head assembly		0		6
2	51.03201-0115	>valve guide >normal		0		12
2	51.03201-0116	>valve guide >repair stage 1 = 0,25 mm		0		12
		>or				*
3	51.03201-0115	>valve guide >normal		0		12
		>or				*
3	51.03201-0116	>valve guide >repair stage 1 = 0,25 mm		0		12
4	51.03203-0301	>valve seat ring >intake		0		12

17.12.2003	Type V48 00	Pet	Chassis No.	Group 030-0	Figure 03 8069
15:01	Table cylinder head assembly		Reference No. 51.#0010-0686 00.00 - 00.00 engine D2866 LOH29/34 with EVB		
Seite: 002					

Pos	Part No.	Description	Pat	ME	All	Stk
5	51.03203-0302	>valve seat ring >exhaust		0		12
6	51.91606-0040	>cover >A25,2/8-X5CRNI1810N		0		12
7	51.91606-0041	>cover >A22,2/7,5-X5CRNI1810N		0		18
8	06.08099-0017	>drain plug >AM22X1,5-ST-C3J		0		6
9	04.10160-9164	>adhesive >50 ML >bottle		H		NB
		>>for >>item number >>6 - 8				*
10	51.91020-0254	>thrust pin		0		6
11	06.31649-0006	>ball >6,350G20P2		0		6

17.12.2003	Type V48 00	Pet	Chassis No.	Group 030-0	Figure 03 8076
15:02	Table cylinder head cover		Reference No. 51.#0010-0686 00.00 - 00.00 engine D2866 LOH29/34 with EVB		
Seite: 001					

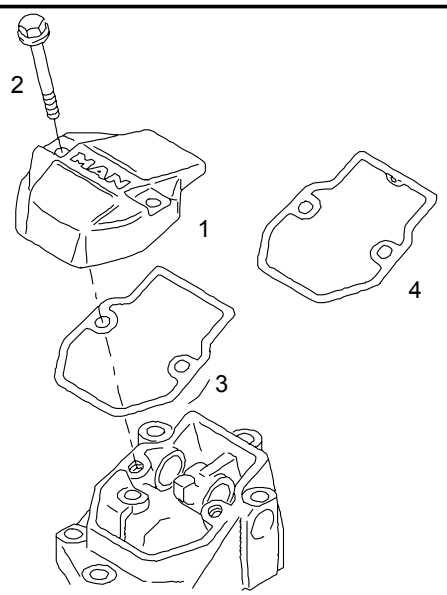

Pos	Part No.	Description	Pat	ME	All	Stk
	51.03401-6008	cylinder head cover assembly standard		0		6
1	51.03401-0186	cylinder head cover		0		6
2	51.90020-0358	>hex collar bolt >M8X43,5-8.8-A2C		0		12
3	51.03905-0157	gasket cylinder head cover asbestos-free		0		5
		>in >set of gaskets for engine >not >contained				*
4	51.03905-0161	gasket cylinder head cover asbestos-free		0		1

17.12.2003	Type V48 00	Pet	Chassis No.	Group 030-0	Figure 03 8076	
15:02	Table cylinder head cover			Reference No. 51.#0010-0686 00.00 - 00.00 engine D2866 LOH29/34 with EVB		
Seite: 002						

Pos	Part No.	Description	Pat	ME	All	Stk
		>in >set of gaskets for engine >not >contained				*

17.12.2003	Type V48 00	Pet	Chassis No.	Group 030-0	Figure 03 8070
15:03	Table mounting parts for cylinder head upper part and cylinder head			Reference No. 51.#0010-0686 00.00 - 00.00 engine D2866 LOH29/34 with EVB	
Seite: 001					

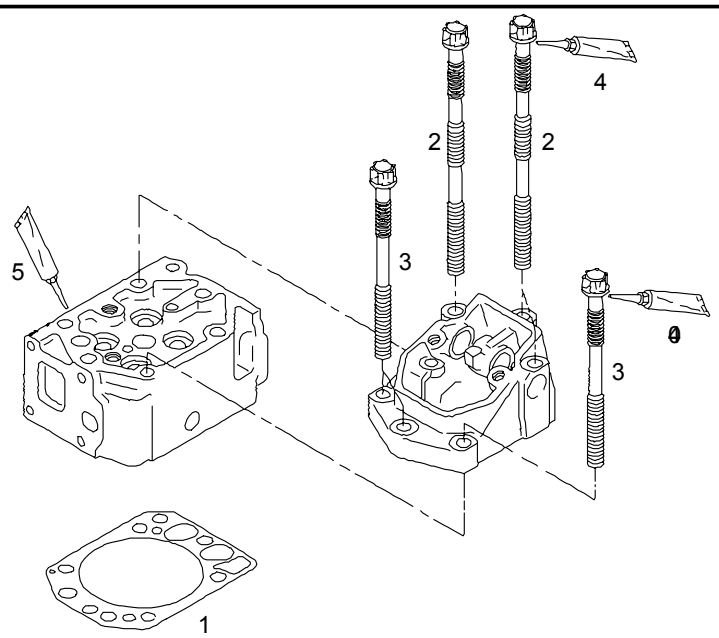

Pos	Part No.	Description	Pat	ME	All	Stk
1	51.03901-0338	cylinder head gasket asbestos-free	0603	0		6
1	51.03901-0382	cylinder head gasket		0		6
2	51.90490-0070	screw with external torx M15X2X259,5-1200N/MM2-E20-ZNPH		0		18
3	51.90490-0071	screw with external torx M15X2X198-1200N/MM2-E20-ZNPHR5		0		18
4	09.16012-0117	assembly paste 100 G tube		U		NB
5	04.10394-9272	sealants 300 ML - cartridge with nozzle		M		NB

17.12.2003	Type V48 00	Pet	Chassis No.	Group 040-0	Figure 04 9014
15:15	Table camshaft with timing gear without injection timer		Reference No. 51.#0170-0231 00.00 - 00.00 camshaft not for power take-off D2866/76 LF..LOH..LUH.. D2876 LOH05		
Seite: 001					

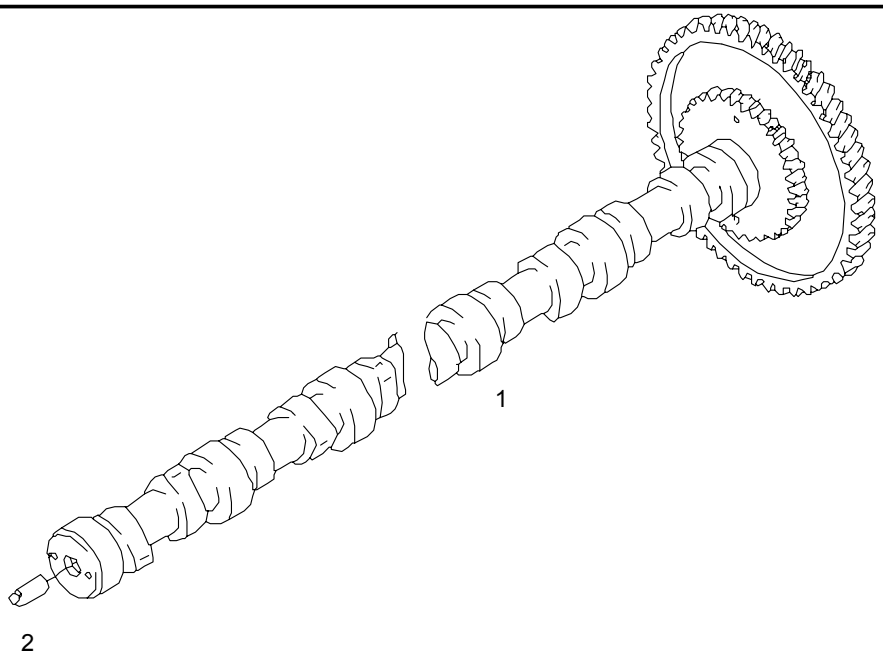

Pos	Part No.	Description	Pat	ME	All	Stk
1	51.04401-5053	camshaft assembly		0		1
2		driving dog deleted				*

17.12.2003	Type V48 00	Pet	Chassis No.	Group 040-0	Figure 04 8027
15:17	Table drive gear for air compressor		Reference No. 51.#0060-0360 00.00 - 00.00 2-cyl.in-line air compressor 600CM3 D2866/76 LOH..LUH..		
Seite: 001					

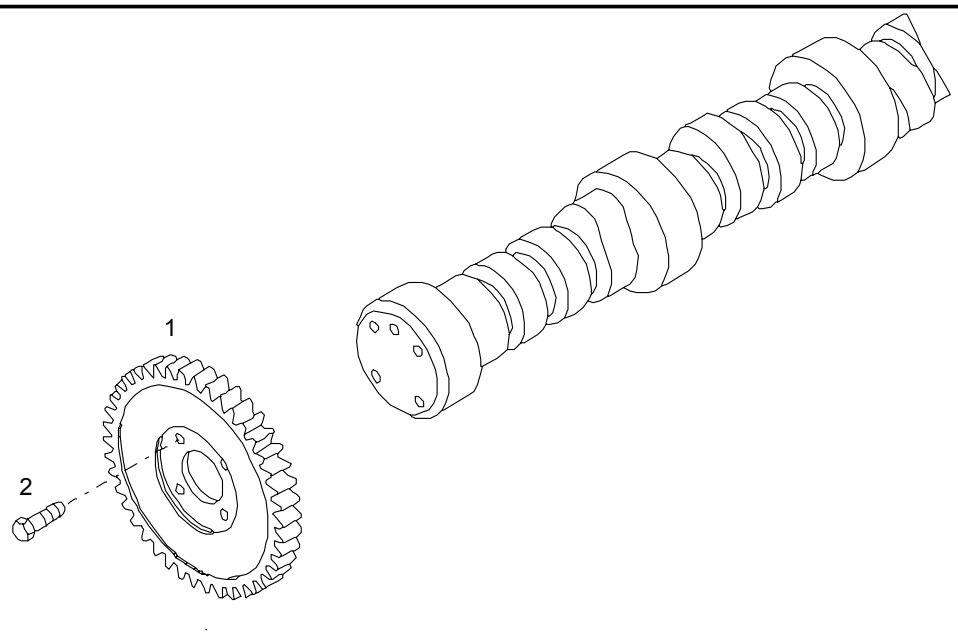

Pos	Part No.	Description	Pat	ME	All	Stk
1	51.54210-0141	drive gear on camshaft for air compressor		0		1
2	06.01285-7218	hex bolt M10X35-12.9-MAN183-PHR		0		4

17.12.2003	Type V48 00	Pet	Chassis No.	Group 040-0	Figure 04 8036
15:18	Table rocker arm bearing box with brake without		Reference No. 51.#0010-0686 00.00 - 00.00 engine D2866 LOH29/34 with EVB		
Seite: 001					

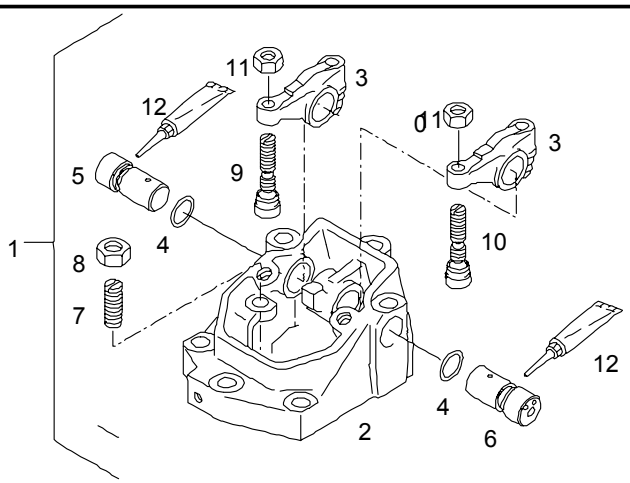

Pos	Part No.	Description	Pat	ME	All	Stk
1	51.04202-6019	rocker arm bearing box assembly with evb	2099	0		5
1	51.04202-6040	rocker arm bearing box assembly with evb	2600	0		5
1	51.04202-6059	rocker arm bearing box assembly with evb		0		5
1	51.04202-6022	rocker arm bearing box assembly with evb needle movement sensor	2099	0		1
1	51.04202-6043	rocker arm bearing box assembly with evb needle movement sensor	2600	0		1

17.12.2003	Type V48 00	Pet	Chassis No.	Group 040-0	Figure 04 8036
15:18	Table rocker arm bearing box with brake without		Reference No. 51.#0010-0686 00.00 - 00.00 engine D2866 LOH29/34 with EVB		
Seite: 002					

Pos	Part No.	Description	Pat	ME	All	Stk
1	51.04202-6062	rocker arm bearing box assembly with evb needle movement sensor		0		1
2	51.04202-0123	>rocker arm bearing box		0		5
2	51.04202-0125	>housing >for rocker arm >NBF		0		1
3	51.04201-6125	>rocker arm	2099	0		12
3	51.04201-6148	>rocker arm	2600	0		12
3	51.04201-6153	>rocker arm		0		12
4	06.56936-1200	>toric seal >23X2,5N-FPM1-70-GN		0		12
5	51.04203-0090	>rocker shaft >exhaust	2600	0		6
5	51.04203-0090	>rocker shaft >exhaust		0		6
6	51.04203-0089	>rocker shaft >intake	2600	0		6
6	51.04203-0089	>rocker shaft >intake		0		6
7	51.04205-0044	>adjusting screw >M14X1X35-12,4-C45-SW5		0		6
8	51.90501-0083	>hexagon nut >M14X1		0		6
9	51.04205-5009	>adjusting screw >M10X1X41,1-B-CF53-SW5		0		6
10	51.04205-5010	>adjusting screw >M10X1X41,1-B-CF53-SW5		0		6
11	51.90501-0030	>hexagon nut >M10X1-7-8-SW14		0		12

17.12.2003	Type V48 00	Pet	Chassis No.	Group 040-0	Figure 04 8036
15:18	Table rocker arm bearing box with brake without		Reference No. 51.#0010-0686 00.00 - 00.00 engine D2866 LOH29/34 with EVB		
Seite: 003					

Pos	Part No.	Description	Pat	ME	All	Stk
12	09.16012-0117	>assembly paste >100 G >tube		U		NB

17.12.2003	Type V48 00	Pet	Chassis No.	Group 040-0	Figure 04 8034
15:21	Table valves		Reference No. 51.#0010-0686 00.00 - 00.00 engine D2866 LOH29/34 with EVB		
Seite: 001					

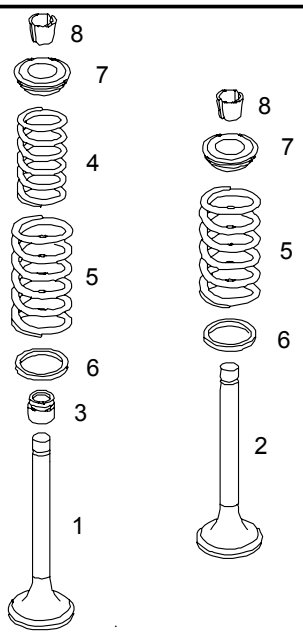

Pos	Part No.	Description	Pat	ME	All	Stk
1	51.04101-0483	exhaust valve 1-groove		0		12
2	51.04101-0482	intake valve 1-groove		0		12
3	51.04902-0033	seal - valve stem		0		24
		>only >outlet-end				*
4		deleted				*
5	51.04102-0138	spring - valve outer		0		24
6	51.90701-0228	washer 15,5X34X0,5-CK67V		0		24
7	51.04103-0099	spring seat		0		24
8	51.04104-0028	valve cotter 1-groove		0		48

17.12.2003	Type V48 00	Pet	Chassis No.	Group 050-0	Figure 05 8433
15:23	Table mono oil filter components with oil cooler		Reference No. 51.#0120-0226 00.00 - 00.00 oil filter + oil cooler		
Seite: 001					

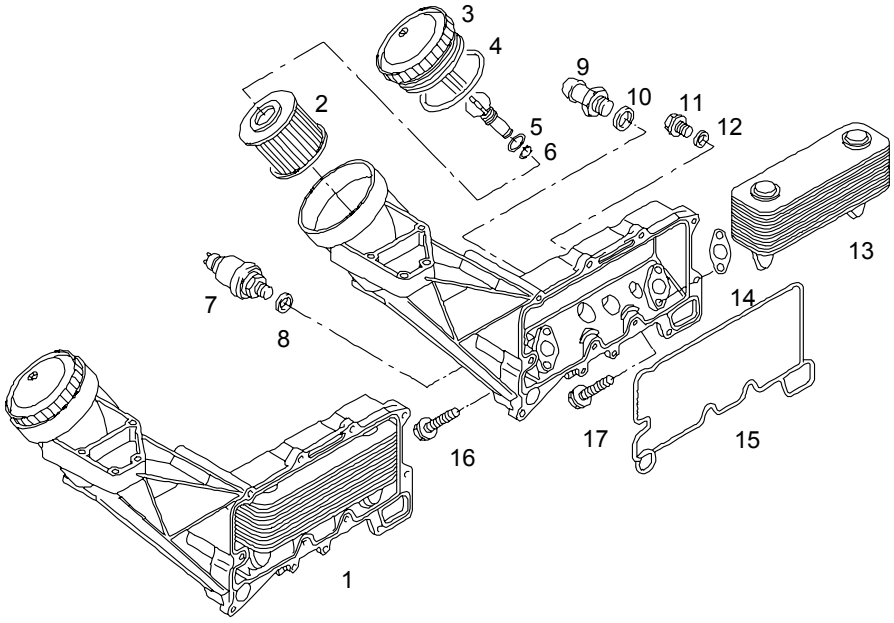

Pos	Part No.	Description	Pat	ME	All	Stk
1	51.05501-7201	oil filter assembly		0		1
2	51.05504-0098	>engine oil filter element >with gasket		0		1
3	51.05505-6002	>cover >for oil filter		0		1
4	51.96501-0487	>>toric seal >>130X4-ACM1-60		0		1
5	51.96501-0486	>>toric seal >>12X2-ACM1-60		0		1
6	51.96501-0485	>>toric seal >>8X2-ACM1-60		0		1
7	81.27421-0109	>pressure sensor >0-5 BAR		0		1

17.12.2003	Type V48 00	Pet	Chassis No.	Group 050-0	Figure 05 8433
15:23	Table mono oil filter components with oil cooler		Reference No. 51.#0120-0226 00.00 - 00.00 oil filter + oil cooler		
Seite: 002					

Pos	Part No.	Description	Pat	ME	All	Stk
8	06.56631-0109	>seal >with elastomer lip >18,7X26X1,5-ST/FPM1-80		0		1
9	51.98131-0213	>hose nipple >22-M26X1,5-ST		0		1
10	06.56631-0112	>seal >with elastomer lip >26,7X34,93X2-ST/FPM1-80		0		1
11	51.90310-0219	>drain plug >M14X1,5X24-ST		0		1
12	06.56631-0106	>seal >with elastomer lip >14,7X22X1,5-ST/FPM1-80		0		1
13	51.05601-0121	>oil cooler		0		1
14	06.56254-2203	>gasket >26X48X1,0-AFOE2-M3219		0		2
15	51.05901-0122	>gasket		0		1
16	51.90490-0027	>screw >with external torx >M8X65,5AK-8.8-E12-FEZN12CD		0		2
17	51.90490-0026	>screw >with external torx >M8X40,5AK-8.8-E12-FEZN12CD		0		2

17.12.2003	Type V48 00	Pet	Chassis No.	Group 050-0	Figure 05 8434
15:23	Table mono oil filter mounting with mounting parts		Reference No. 51.#0120-0226 00.00 - 00.00 oil filter + oil cooler		
Seite: 001					

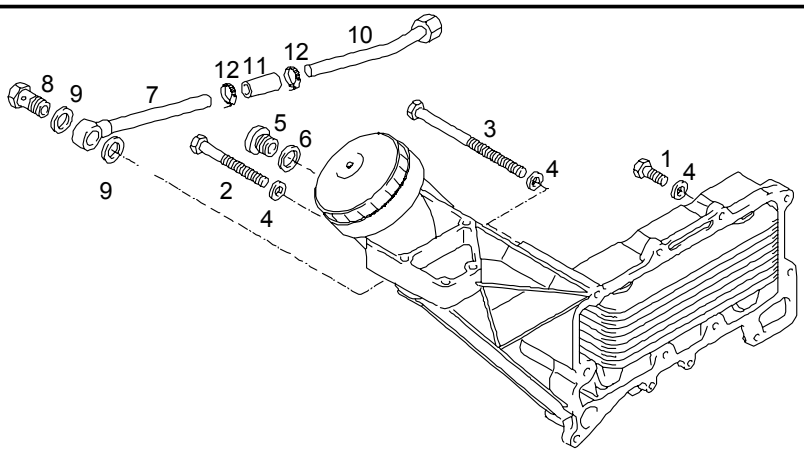

Pos	Part No.	Description	Pat	ME	All	Stk
1	06.01283-5218	hex bolt M10X35-8.8-MAN183-B1		0		8
2	06.01019-0113	hex shoulder stud M10X145-8.8-A3C		0		1
3	06.01019-0148	hex shoulder stud M10X170-8.8-A3C		0		1
4	06.16049-0025	spring washer B10-FST-MAN183-B1		0		10
5	06.08042-0605	drain plug M18X1,5-ST-A3C		0		1
6	06.56631-0109	seal with elastomer lip 18,7X26X1,5-ST/FPM1-80		0		1
7	51.05703-5264	oil return pipe with bead		0		1

17.12.2003	Type V48 00	Pet	Chassis No.	Group 050-0	Figure 05 8434
15:23	Table mono oil filter mounting with mounting parts		Reference No. 51.#0120-0226 00.00 - 00.00 oil filter + oil cooler		
Seite: 002					

Pos	Part No.	Description	Pat	ME	All	Stk
8	06.78340-8107	hollow screw 12-A4D		0		1
9	06.56631-0107	seal with elastomer lip 16,7X24X1,5-ST/FPM1-80		0		2
10	51.05703-5226	oil return pipe with bead		0		1
11	51.96330-0414	hose 12X70+-2-1		0		1
12	51.97440-0144	spring clip 23X12-CK75		0		2

17.12.2003	Type V48 00	Pet	Chassis No.	Group 050-0	Figure 05 8435
15:24	Table oil dipstick		Reference No. 51.#0380-0509 00.00 - 00.00 oil dipstick turbocharger lateral D2866/76 LOH..		
Seite: 001					

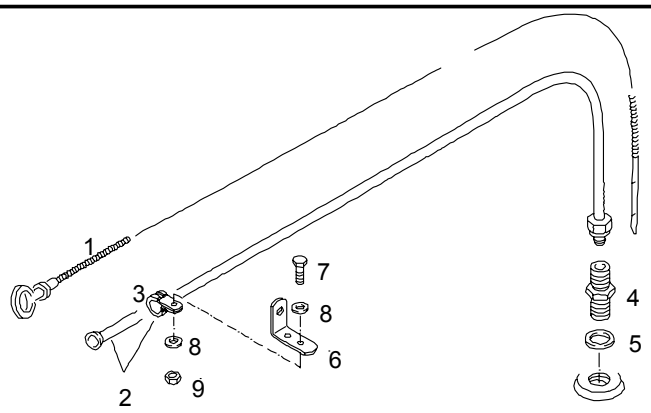

Pos	Part No.	Description	Pat	ME	All	Stk
1	51.05805-5657	oil dipstick		0		1
2	51.05806-5179	guide tube		0		1
3	06.67300-1026	>clamp >D1-10X15-W1-EPDM-2		0		1
4	06.71060-2103	straight union L10A-M-ST-A4C		0		1
5	06.56631-0106	seal with elastomer lip 14,7X22X1,5-ST/FPM1-80		0		1
6	51.97480-0438	bracket		0		1
7	06.01283-4914	hex bolt M6X22-8.8-MAN183-B1		0		1
8	06.15013-0409	washer A6,4X12X1,6-200HV-MAN183-B1		0		2

17.12.2003	Type V48 00	Pet	Chassis No.	Group 050-0	Figure 05 8435
15:24	Table oil dipstick		Reference No. 51.#0380-0509 00.00 - 00.00 oil dipstick turbocharger lateral D2866/76 LOH..		
Seite: 002					

Pos	Part No.	Description	Pat	ME	All	Stk
9	06.11064-2112	hexagon nut M6-8-MAN183-B1		0		1

17.12.2003	Type V48 00	Pet	Chassis No.	Group 050-0	Figure 05 8445
15:26	Table oil dipstick with tube oil cooler end		Reference No. 51.#0380-0584 00.00 - 00.00 oil dipstick turbocharger lateral D2866 LOH..		
Seite: 001					

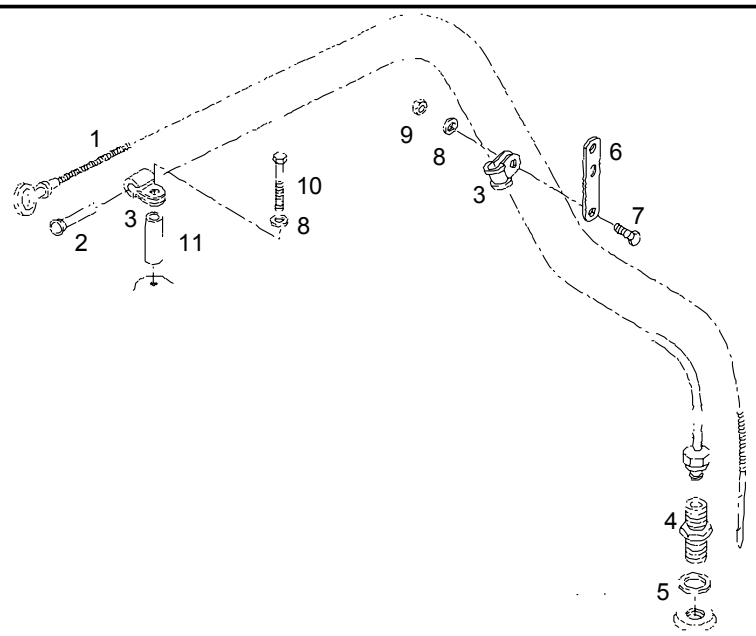

Pos	Part No.	Description	Pat	ME	All	Stk
1	51.05805-5687	oil dipstick		0		1
2	51.05806-5187	guide tube		0		1
3	06.67300-1036	>clamp >D1-10X20-W1-EPDM-2		0		2
4	06.71060-2103	straight union L10A-M-ST-A4C		0		1
5	06.56631-0106	seal with elastomer lip 14,7X22X1,5-ST/FPM1-80		0		1
6	51.97480-0558	bracket		0		1
7	06.01283-5114	hex bolt M8X22-8.8-MAN183-B1		0		1
8	06.15013-0411	washer A8,4X16X1,6-200HV-MAN183-B1		0		2

17.12.2003	Type V48 00	Pet	Chassis No.	Group 050-0	Figure 05 8445
15:26	Table oil dipstick with tube oil cooler end		Reference No. 51.#0380-0584 00.00 - 00.00 oil dipstick turbocharger lateral D2866 LOH..		
Seite: 002					

Pos	Part No.	Description	Pat	ME	All	Stk
9	06.11064-2114	hexagon nut M8-8-MAN183-B1		0		1
10	06.01013-7120	hex shoulder stud M8X75-8.8-MAN183-B1		0		1
11	51.91701-0401	bush 9X18X50-ST35NBK		0		1

17.12.2003	Type V48 00	Pet	Chassis No.	Group 050-0	Figure 05 8444
15:26	Table oil filler pipe injection pump end		Reference No. 51.#0380-0583 00.00 - 00.00 oil filler in oil sump injection pump end D2866 LOH..		
Seite: 001					

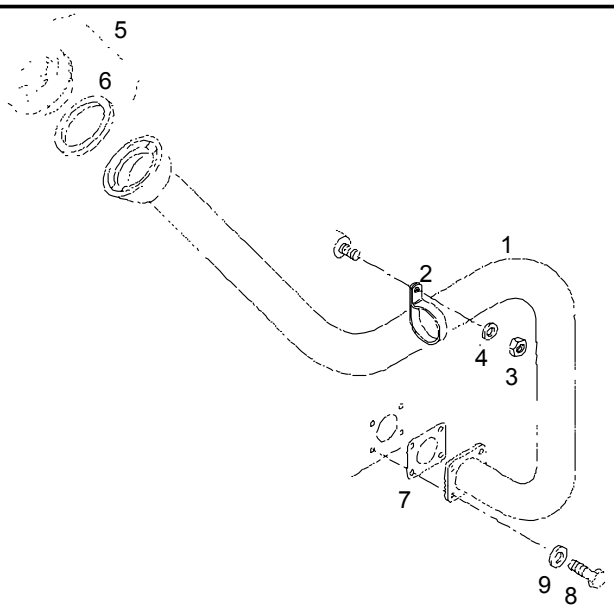

Pos	Part No.	Description	Pat	ME	All	Stk
1	51.05807-5018	oil filler pipe soldered		0		1
2	51.97401-0161	>clamp >A38X20X44-9-UST37-2		0		1
3	06.11064-2114	hexagon nut M8-8-MAN183-B1		0		1
4	06.15013-0411	washer A8,4X16X1,6-200HV-MAN183-B1		0		1
5	51.97141-7006	bayonet cap 40-ST-ZN		0		1
6	51.96601-0313	>seal >38X57X3-NBR-70		0		1
7	51.01908-0018	gasket oil filler pipe asbestos-free		0		1

17.12.2003	Type V48 00	Pet	Chassis No.	Group 050-0	Figure 05 8444
15:26	Table oil filler pipe injection pump end		Reference No. 51.#0380-0583 00.00 - 00.00 oil filler in oil sump injection pump end D2866 LOH..		
Seite: 002					

Pos	Part No.	Description	Pat	ME	All	Stk
8	06.01284-7115	hex bolt M8X25-10.9-MAN183-PHR		0		4
9	06.15013-0411	washer A8,4X16X1,6-200HV-MAN183-B1		0		4

17.12.2003	Type V48 00	Pet	Chassis No.	Group 050-0	Figure 05 8207
15:26	Table oil filler pipe long oil cooler end		Reference No. 51.#0380-0496 00.00 - 00.00 oil filler in oil sump oil cooler end D2866/76 LOH..		
Seite: 001					

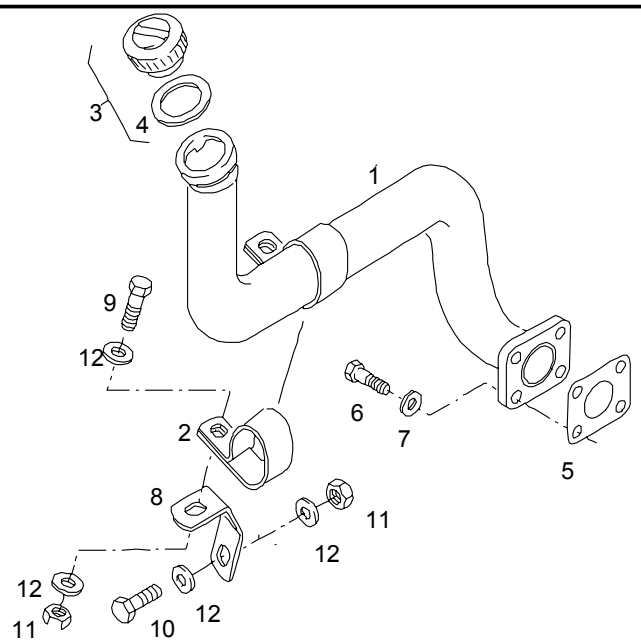

Pos	Part No.	Description	Pat	ME	All	Stk
1	51.05807-5013	oil filler pipe assembly soldered		0		1
2	51.97401-0125	>clamp >B38,2X20X53-9X13-UST37-2		0		1
3	51.97141-7006	bayonet cap 40-ST-ZN		0		1
4	51.96601-0313	>seal >38X57X3-NBR-70		0		1
5	51.01908-0018	gasket oil filler pipe asbestos-free		0		1
6	06.01284-7115	hex bolt M8X25-10.9-MAN183-PHR		0		4
7	06.15013-0411	washer A8,4X16X1,6-200HV-MAN183-B1		0		4

17.12.2003	Type V48 00	Pet	Chassis No.	Group 050-0	Figure 05 8207
15:26	Table oil filler pipe long oil cooler end			Reference No. 51.#0380-0496 00.00 - 00.00 oil filler in oil sump oil cooler end D2866/76 LOH..	
Seite: 002					

Pos	Part No.	Description	Pat	ME	All	Stk
8	51.97480-0870	bracket		0		1
9	06.01284-7115	hex bolt M8X25-10.9-MAN183-PHR		0		1
10	06.01283-5114	hex bolt M8X22-8.8-MAN183-B1		0		1
11	06.11064-2114	hexagon nut M8-8-MAN183-B1		0		2
12	06.15013-0411	washer A8,4X16X1,6-200HV-MAN183-B1		0		4

17.12.2003	Type V48 00	Pet	Chassis No.	Group 050-0	Figure 05 8302
15:27	Table oil filler pipe oil cooler end		Reference No. 51.#0380-0306 00.00 - 00.00 oil filler in oil sump oil cooler end D2866/76 LOH..		
Seite: 001					

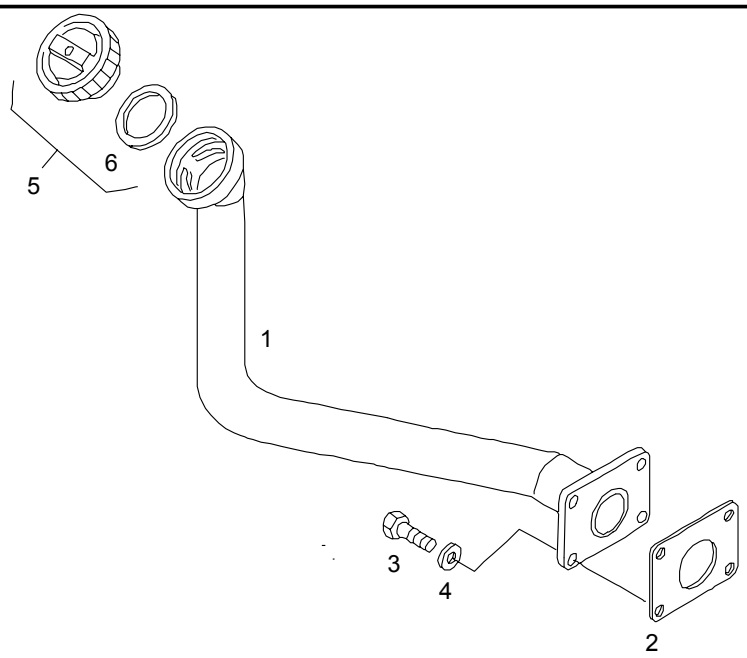

Pos	Part No.	Description	Pat	ME	All	Stk
1	51.01810-5300	oil filler pipe		0		1
2	51.01908-0018	gasket oil filler pipe asbestos-free		0		1
3	06.01284-7115	hex bolt M8X25-10.9-MAN183-PHR		0		4
4	06.15013-0411	washer A8,4X16X1,6-200HV-MAN183-B1		0		4
5	51.97141-7006	bayonet cap 40-ST-ZN		0		1
6	51.96601-0313	>seal >38X57X3-NBR-70		0		1

17.12.2003	Type V48 00	Pet	Chassis No.	Group 050-0	Figure 05 8436
15:27	Table oil filler pipe on air compressor		Reference No. 51.#0380-0563 00.00 - 00.00 oil filler on air compressor D2866/76 LOH..		
Seite: 001					

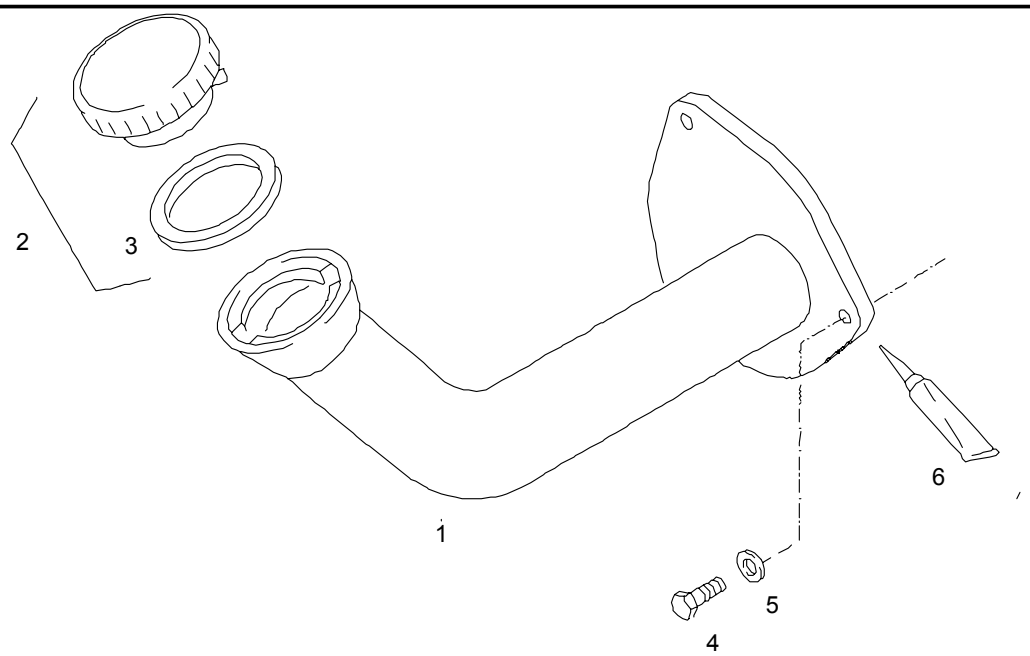

Pos	Part No.	Description	Pat	ME	All	Stk
1	51.01810-5331	oil filler pipe		0		1
2	51.97141-7006	bayonet cap 40-ST-ZN		0		1
3	51.96601-0313	>seal >38X57X3-NBR-70		0		1
4	06.01283-5114	hex bolt M8X22-8.8-MAN183-B1		0		3
5	06.15013-0411	washer A8,4X16X1,6-200HV-MAN183-B1		0		3
6	04.10394-9256	sealing compound TEROSTAT-63-310ML-RTBR cartridge with nozzle		M		NB

17.12.2003	Type V48 00	Pet	Chassis No.	Group 050-0	Figure 05 8392
15:28	Table oil filler pipe on flywheel housing			Reference No. 51.#0380-0424 00.00 - 00.00 oil filler on flywheel housing D2865/66 LOH..	
Seite: 001					

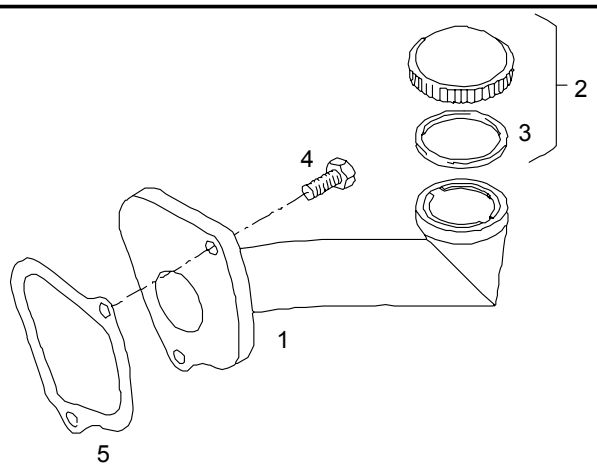

Pos	Part No.	Description	Pat	ME	All	Stk
1	51.01810-5319	oil filler pipe assembly		0		1
2	51.97141-7006	bayonet cap 40-ST-ZN		0		1
3	51.96601-0313	>seal >38X57X3-NBR-70		0		1
4	06.01283-5115	hex bolt M8X25-8.8-MAN183-B1		0		2
5	51.01903-0235	gasket asbestos-free		0		1

17.12.2003	Type V48 00	Pet	Chassis No.	Group 050-0	Figure 05 8204
15:28	Table oil suction line		Reference No. 51.#0130-0345 00.00 - 00.00 oil sump uncoated 30L flat		
Seite: 001					

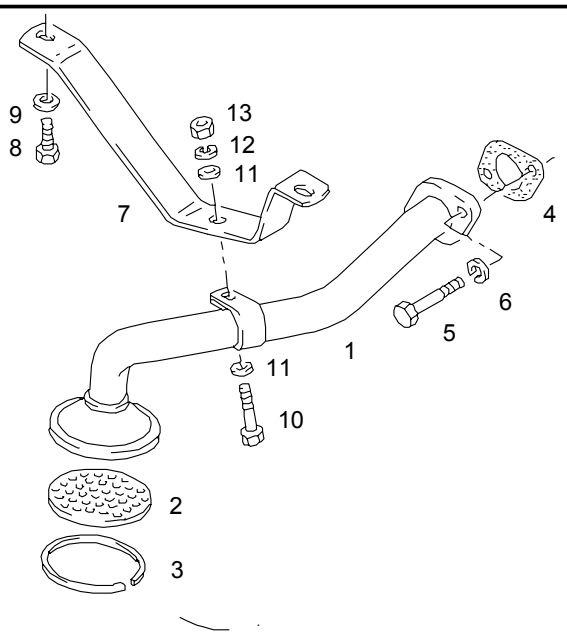

Pos	Part No.	Description	Pat	ME	All	Stk
1	51.05702-5938	oil suction line assembly soldered		0		1
2	51.05705-0025	perforated plate	1799	0		1
3	51.90815-0016	circlip 73,0X78,6X2,00	1799	0		1
4	06.56259-0033	gasket 35X58X1,0-AFOE2-M3219-A1-G1		0		1
5	06.01283-5121	hex bolt M8X50-8.8-MAN183-B1		0		2
6	06.16739-0014	spring washer A8-MAN183-B1	0698	0		2
7	51.05740-0138	bracket		0		1
8	06.01284-5113	hex bolt M8X20-10.9-MAN183-B1		0		2

17.12.2003	Type V48 00	Pet	Chassis No.	Group 050-0	Figure 05 8204
15:28	Table oil suction line		Reference No. 51.#0130-0345 00.00 - 00.00 oil sump uncoated 30L flat		
Seite: 002					

Pos	Part No.	Description	Pat	ME	All	Stk
9	06.15230-0205	washer 8,4X21X4-ST-MAN183-B1		0		2
10	06.01284-7118	hex bolt M8X35-10.9-MAN183-PHR		0		1
11	51.90710-0314	washer 9X19X3-9SMNPB28K		0		2
12	06.16739-0014	spring washer A8-MAN183-B1	0698	0		1
13	06.11064-2114	hexagon nut M8-8-MAN183-B1		0		1

17.12.2003	Type V48 00	Pet	Chassis No.	Group 050-0	Figure 05 8350
15:29	Table oil sump		Reference No. 51.#0130-0345 00.00 - 00.00 oil sump uncoated 30L flat		
Seite: 001					

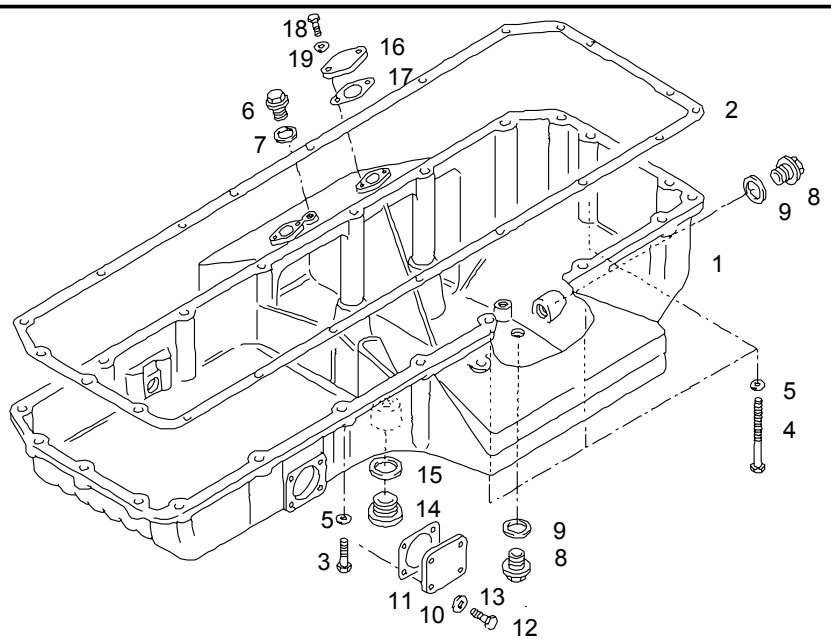

Pos	Part No.	Description	Pat	ME	All	Stk
1	51.05801-5645	oil sump assembly		0		1
2	51.05904-0132	gasket asbestos-free for oil sump		0		1
3	06.01303-3118	hex bolt M8X35SK-8.8-MAN183-A2C		0		16
4	06.01019-0074	hex shoulder stud M8X125-8.8-A2C		0		5
5	06.15013-0411	washer A8,4X16X1,6-200HV-MAN183-B1		0		21
6	51.90310-0213	drain plug M14X1,5X14-ST-SW13	3500	0		1
6	06.08042-0603	drain plug M14X1,5-ST-A3C		0		1

17.12.2003	Type V48 00	Pet	Chassis No.	Group 050-0	Figure 05 8350
15:29	Table oil sump		Reference No. 51.#0130-0345 00.00 - 00.00 oil sump uncoated 30L flat		
Seite: 002					

Pos	Part No.	Description	Pat	ME	All	Stk
7	06.56631-0106	seal with elastomer lip 14,7X22X1,5-ST/FPM1-80		0		1
8	51.90310-0198	drain plug M18X1,5X14-9SMNPB28K-SW17	0798	0		2
8	51.90310-0240	drain plug M18X1,5X15-9SMNPB28K		0		2
9	06.56190-0713	seal A18X24-CU	1400	0		2
9	06.56631-0109	seal with elastomer lip 18,7X26X1,5-ST/FPM1-80		0		2
10	51.98112-0081	rivetted flange 4-hole		0		1
11	51.01908-0018	gasket oil filler pipe asbestos-free		0		1
12	06.01284-7115	hex bolt M8X25-10.9-MAN183-PHR		0		4
13	06.15013-0411	washer A8,4X16X1,6-200HV-MAN183-B1		0		4
14	06.08042-0607	drain plug M22X1,5-ST-A3C		0		1
15	06.56190-0718	seal A22X27-CU	1400	0		1
15	06.56631-0110	seal with elastomer lip 22,7X30X2-ST/FPM1-80		0		1
16	51.98112-0199	rivetted flange		0		1
17	51.96601-0537	gasket 26X42X7X1-AFOE-W1 asbestos-free		0		1
18	06.01283-4913	hex bolt M6X20-8.8-MAN183-B1		0		2

17.12.2003	Type V48 00	Pet	Chassis No.	Group 050-0	Figure 05 8350
15:29	Table oil sump		Reference No. 51.#0130-0345 00.00 - 00.00 oil sump uncoated 30L flat		
Seite: 003					

Pos	Part No.	Description	Pat	ME	All	Stk
19	06.15013-0409	washer A6,4X12X1,6-200HV-MAN183-B1		0		2

17.12.2003	Type V48 00	Pet	Chassis No.	Group 050-0	Figure 05 8001
15:31	Table standard-capacity oil pump			Reference No. 51.#0130-0345 00.00 - 00.00 oil sump uncoated 30L flat	
Seite: 001					

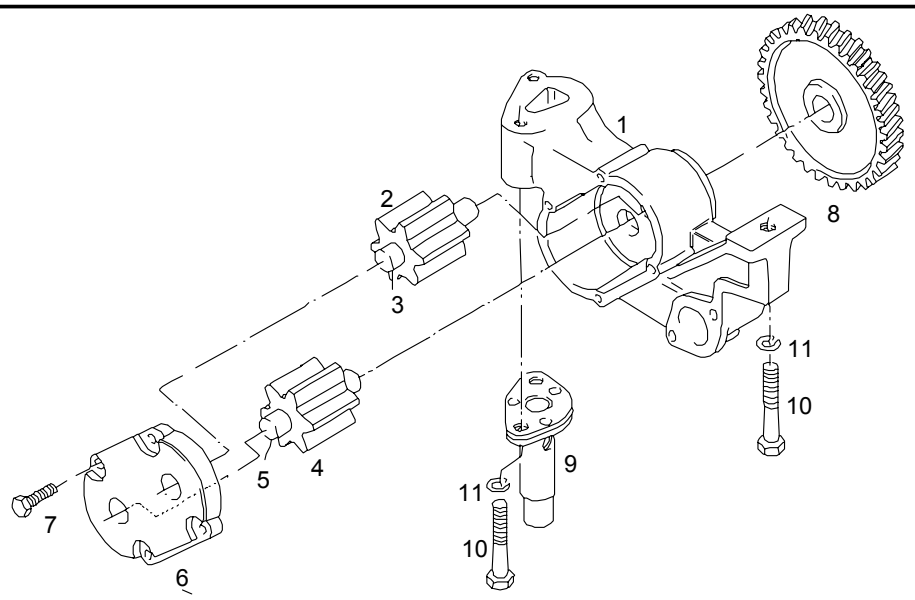

Pos	Part No.	Description	Pat	ME	All	Stk
	51.05100-6252	oil pump assembly	3298	0		1
	51.05100-6262	oil pump assembly		0		1
1	51.05102-0073	>body, oil pump		0		1
2	51.05104-6111	>gear - oil pump >assembly		0		1
3	51.05105-0062	>>drive shaft		0		1
4	51.05104-6113	>gear - oil pump >assembly >RADBREITE 38 MM		0		1
5	51.05105-0061	>>shaft		0		1
6	51.05103-0103	>cover - oil pump		0		1
7	06.01283-5120	>hex bolt >M8X45-8.8-MAN183-B1		0		4

17.12.2003	Type V48 00	Pet	Chassis No.	Group 050-0	Figure 05 8001
15:31	Table standard-capacity oil pump			Reference No. 51.#0130-0345 00.00 - 00.00 oil sump uncoated 30L flat	
Seite: 002					

Pos	Part No.	Description	Pat	ME	All	Stk
8	51.05201-0072	>drive gear >oil pump	3597	0		1
8	51.05201-0057	>drive gear		0		1
9	51.05405-5013	oil pressure valve		0		1
10	06.01283-5122	hex bolt M8X55-8.8-MAN183-B1		0		3
11	06.16739-0014	spring washer A8-MAN183-B1	0698	0		3

17.12.2003	Type V48 00	Pet	Chassis No.	Group 060-0	Figure 06 8498
15:32	Table 3-flange water pump with components		Reference No. 51.#0470-0447 00.00 - 00.00 3-flange water pump with/for exhaust gas recirculation (3X10) D2866/76 LOH..		
Seite: 001					

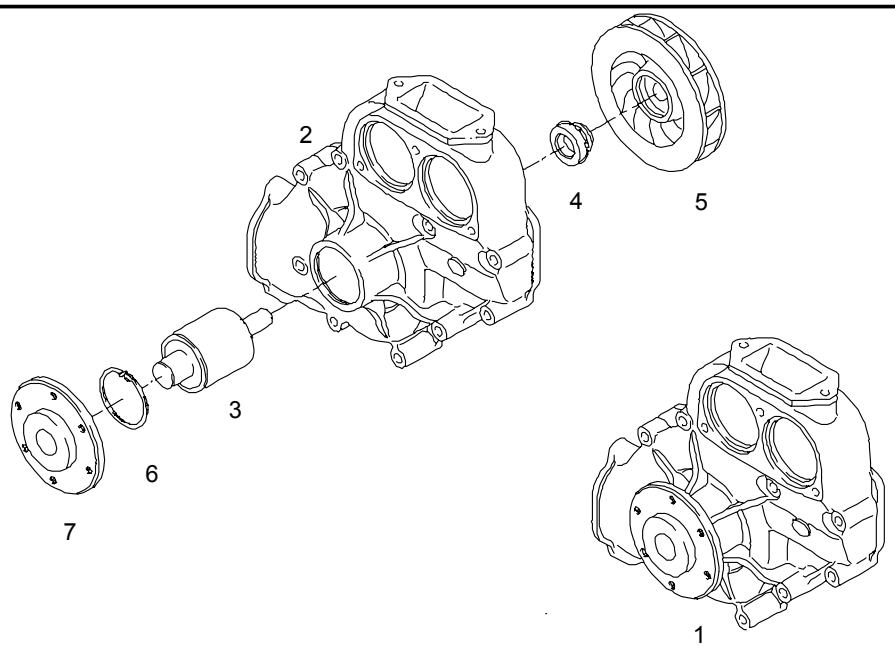

Pos	Part No.	Description	Pat	ME	All	Stk
1	51.06500-6426	coolant pump assembly		0		1
2	51.06501-0161	>water pump housing		0		1
3	51.93410-0116	>water pump bearing		0		1
4	51.06520-0085	>o-ring seal		0		1
5	51.06506-0090	>diffuser		0		1
6	06.29020-0132	>circlip >55X2,00-ZNPHR5F		0		1
7	51.06504-0035	hub		0		1

17.12.2003	Type V48 00	Pet	Chassis No.	Group 060-0	Figure 06 8526
15:33	Table bleeder pipe		Reference No. 51.#0470-0447 00.00 - 00.00 3-flange water pump with/for exhaust gas recirculation (3X10) D2866/76 LOH..		
Seite: 001					

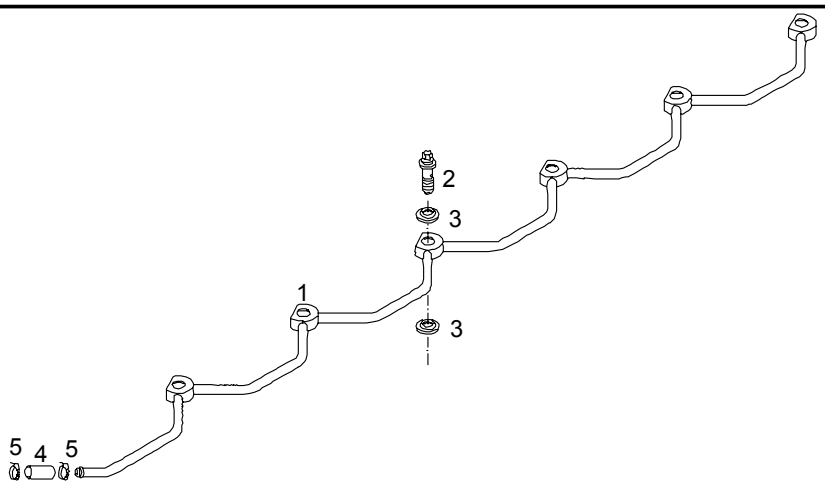

Pos	Part No.	Description	Pat	ME	All	Stk
1	51.06303-5300	coolant pipe bleeder soldered		0		1
2	51.98150-0173	hollow screw with external torx M14X1,5X26E-8.8-E14-ZNPHR3F		0		6
3	06.56631-0106	seal with elastomer lip 14,7X22X1,5-ST/FPM1-80		0		12
4	04.27405-9502	cooling water hose 10-5X20000		1		,05
5	51.97440-0149	spring clip 18X12-CK75		0		2

17.12.2003	Type V48 00	Pet	Chassis No.	Group 060-0	Figure 06 8543
15:34	Table coolant elbow coolant outlet oil cooler end		Reference No. 51.#0460-0134 00.00 - 00.00 coolant outlet oil cooler end D2866/76 LOH..		
Seite: 001					

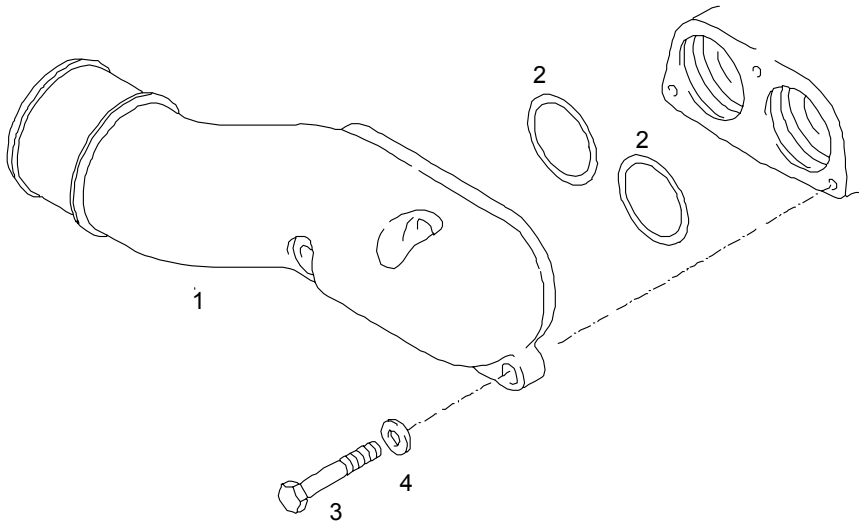

Pos	Part No.	Description	Pat	ME	All	Stk
1	51.06302-0491	coolant elbow		0		1
2	06.56341-2122	toric seal 60X4B-NBR3-60		0		2
3	06.01283-5122	hex bolt M8X55-8.8-MAN183-B1		0		2
3	06.01283-3124	hex bolt M8X65-8.8-A2C		0		1
4	06.15013-0411	washer A8,4X16X1,6-200HV-MAN183-B1		0		3

17.12.2003	Type V48 00	Pet	Chassis No.	Group 060-0	Figure 06 8366
15:35	Table coolant elbow for heater feed circuit		Reference No. 51.#0310-0173 00.00 - 00.00 without heater feed circuit with retarder + exhaust gas recirculation D2866/76 LOH..		
Seite: 001					

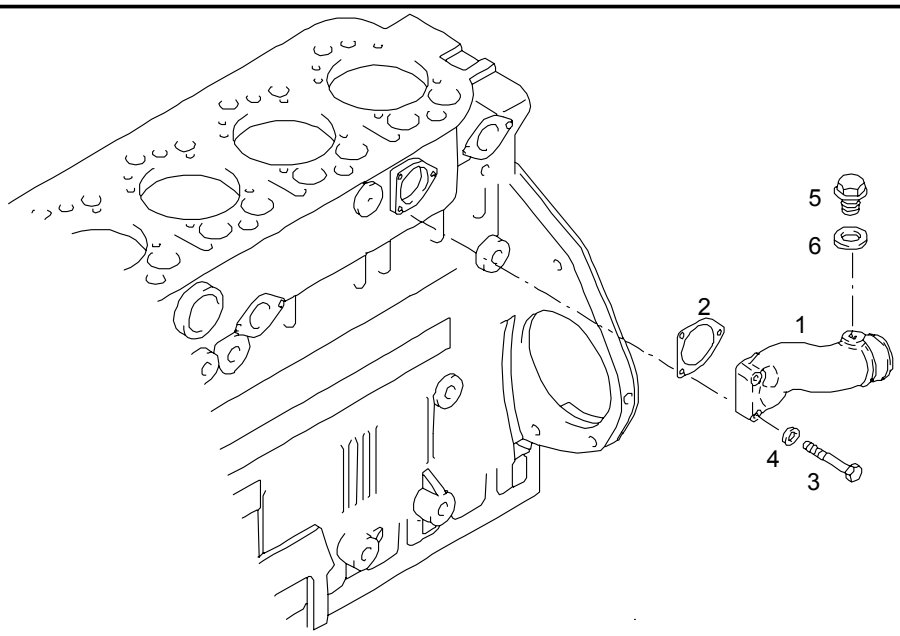

Pos	Part No.	Description	Pat	ME	All	Stk
1	51.06301-0987	coolant elbow		0		1
2	51.06901-0157	gasket		0		1
3	06.01013-7115	hex shoulder stud M8X50-8.8-MAN183-B1		0		3
4	06.15013-0411	washer A8,4X16X1,6-200HV-MAN183-B1		0		3
		item number 5 + 6 deleted				*

17.12.2003	Type V48 00	Pet	Chassis No.	Group 060-0	Figure 06 8546
15:35	Table coolant elbow inlet on coolant pump		Reference No. 51.#0470-0448 00.00 - 00.00 cooling water inlet and breather with alternator 140A D2866/76 LOH..		
Seite: 001					

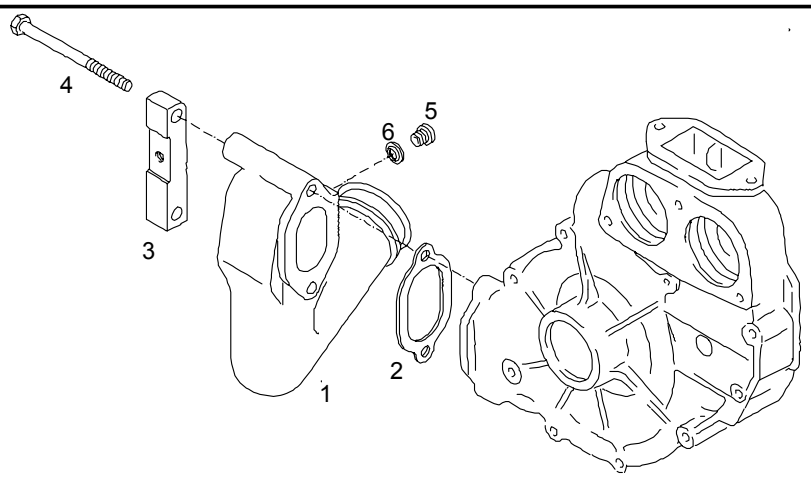

Pos	Part No.	Description	Pat	ME	All	Stk
1	51.06302-0347	coolant elbow		0		1
2	51.06901-0111	gasket asbestos-free		0		1
3	51.19103-0260	bracket for eye bolt		0		1
4	06.01019-0140	hex shoulder stud M10X130-8.8-A3C		0		2
5	06.08042-0605	drain plug M18X1,5-ST-A3C		0		1
6	06.56190-0713	seal A18X24-CU	1400	0		1
6	06.56631-0109	seal with elastomer lip 18,7X26X1,5-ST/FPM1-80		0		1

17.12.2003	Type V48 00	Pet	Chassis No.	Group 060-0	Figure 06 8281
15:36	Table coolant elbow inlet to water pump		Reference No. 51.#0470-0235 00.00 - 00.00 cooling water inlet D2865/66/76 LOH..		
Seite: 001					

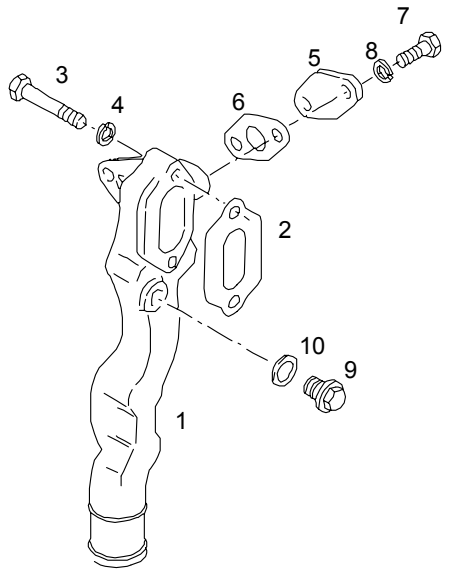

Pos	Part No.	Description	Pat	ME	All	Stk
1	51.06302-0259	coolant elbow		0		1
2	51.06901-0111	gasket asbestos-free		0		1
3	06.01283-5225	hex bolt M10X70-8.8-MAN183-B1		0		2
4	06.15013-0412	washer A10,5X20X2-200HV-MAN183-B1		0		2
5	51.98112-0108	flange		0		1
6	51.96601-0391	gasket asbestos-free		0		1
7	06.01284-6911	hex bolt M6X16-10.9-MAN183-PHR		0		2
8	06.16739-0011	spring washer A6-MAN183-B1	0698	0		2

17.12.2003	Type V48 00	Pet	Chassis No.	Group 060-0	Figure 06 8281
15:36	Table coolant elbow inlet to water pump		Reference No. 51.#0470-0235 00.00 - 00.00 cooling water inlet D2865/66/76 LOH..		
Seite: 002					

Pos	Part No.	Description	Pat	ME	All	Stk
9	06.08099-0016	drain plug AM18X1,5-ST-MAN183-B1		0		1
10	06.56190-0713	seal A18X24-CU	1400	0		1
10	06.56631-0109	seal with elastomer lip 18,7X26X1,5-ST/FPM1-80		0		1

17.12.2003	Type V48 00	Pet	Chassis No.	Group 060-0	Figure 06 8545
15:37	Table coolant elbow to heat exchanger with exhaust gas reurcucation			Reference No. 51.#0470-0447 00.00 - 00.00 3-flange water pump with/for exhaust gas recirculation (3X10) D2866/76 LOH..	
Seite: 001					

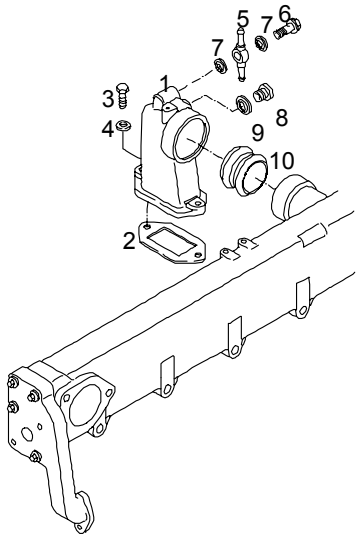

Pos	Part No.	Description	Pat	ME	All	Stk
1	51.06302-0533	coolant elbow		0		1
2	51.06901-0185	gasket		0		1
3	06.01283-5118	hex bolt M8X35-8.8-MAN183-B1		0		2
4	06.15013-0411	washer A8,4X16X1,6-200HV-MAN183-B1		0		2
5	51.98103-0087	ring union		0		1
6	06.78340-0406	hollow screw 10S		0		1
7	06.56190-0706	seal A14X20-CU	1400	0		2
7	06.56631-0106	seal with elastomer lip 14,7X22X1,5-ST/FPM1-80		0		2

17.12.2003	Type V48 00	Pet	Chassis No.	Group 060-0	Figure 06 8545
15:37	Table coolant elbow to heat exchanger with exhaust gas reurcucation			Reference No. 51.#0470-0447 00.00 - 00.00 3-flange water pump with/for exhaust gas recirculation (3X10) D2866/76 LOH..	
Seite: 002					

Pos	Part No.	Description	Pat	ME	All	Stk
8	06.08092-0145	drain plug AM16X1,5-ST-A3C		0		1
9	06.56190-0708	seal A16X20-CU	1400	0		1
9	06.56631-0107	seal with elastomer lip 16,7X24X1,5-ST/FPM1-80		0		1
10	51.98182-0008	extension tube		0		1

17.12.2003	Type V48 00	Pet	Chassis No.	Group 060-0	Figure 06 8541
15:37	Table coolant elbow to modulus exhaust gas recirculation		Reference No. 51.#0310-0173 00.00 - 00.00 without heater feed circuit with retarder + exhaust gas recirculation D2866/76 LOH..		
Seite: 001					

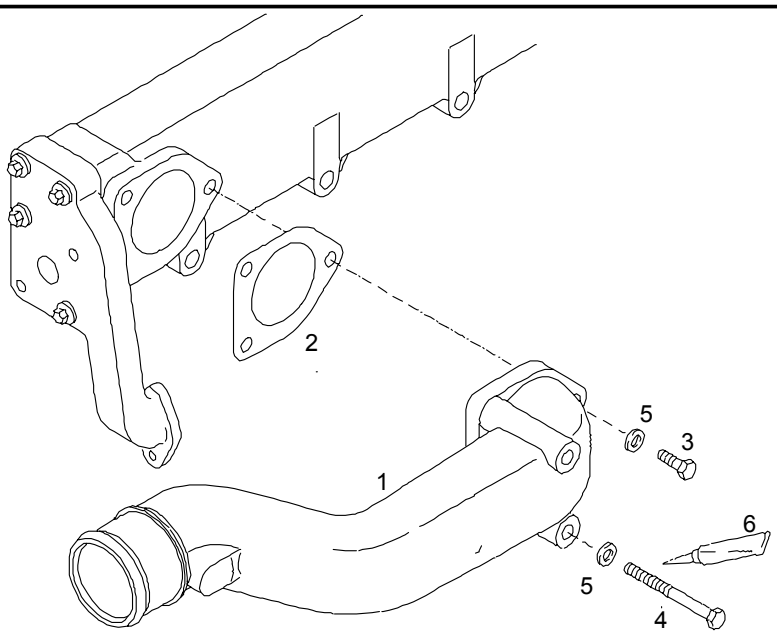

Pos	Part No.	Description	Pat	ME	All	Stk
1	51.06302-0541	coolant elbow		0		1
2	51.06901-0157	gasket		0		1
3	06.01283-5118	hex bolt M8X35-8.8-MAN183-B1		0		1
4	06.01013-3146	hex shoulder stud M8X105-8.8-A2C		0		2
5	06.15013-0411	washer A8,4X16X1,6-200HV-MAN183-B1		0		3
6	04.90300-9009	adhesive 200M-FL250G bottle		D		NB

17.12.2003	Type V48 00	Pet	Chassis No.	Group 060-0	Figure 06 1205
15:38	Table coolant pipe		Reference No. 51.#0310-0200 00.00 - 00.00 without heater feed circuit with/for exhaust gas recirculation D2866 LOH..		
Seite: 001					

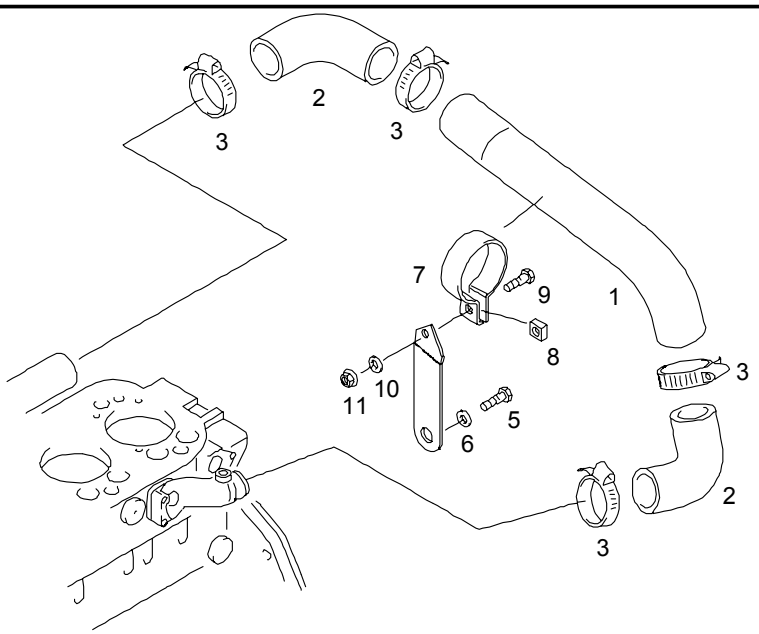

Pos	Part No.	Description	Pat	ME	All	Stk
1	81.06303-0143	coolant pipe		0		1
2	81.96305-0134	hose bend 60/60-40/40/40-MAN334-3-BL		0		2
3	06.67128-6323	hose clamp AS64-71M		0		4
4	81.06340-0252	bracket		0		1
5	06.01289-0182	hex bolt M16X30-8.8-MAN183-A3C		0		1
6	06.15013-0416	washer A17X30X3-200HV-MAN183-B1		0		1
7	06.67042-0113	clamp 60,5-A4C		0		1
8	81.90750-0649	square washer		0		1
9	06.01283-5115	hex bolt M8X25-8.8-MAN183-B1		0		1

17.12.2003	Type V48 00	Pet	Chassis No.	Group 060-0	Figure 06 1205
15:38	Table coolant pipe		Reference No. 51.#0310-0200 00.00 - 00.00 without heater feed circuit with/for exhaust gas recirculation D2866 LOH..		
Seite: 002					

Pos	Part No.	Description	Pat	ME	All	Stk
10	06.15013-0411	washer A8,4X16X1,6-200HV-MAN183-B1		0		2
11	06.11064-2114	hexagon nut M8-8-MAN183-B1		0		1

17.12.2003	Type V48 00	Pet	Chassis No.	Group 060-0	Figure 06 8542
15:39	Table coolant pipe exhaust gas recirculation		Reference No. 51.#0310-0174 00.00 - 00.00 heater feed circuit DM38 with/for exhaust gas recirculation D2866/76 LOH..		
Seite: 001					

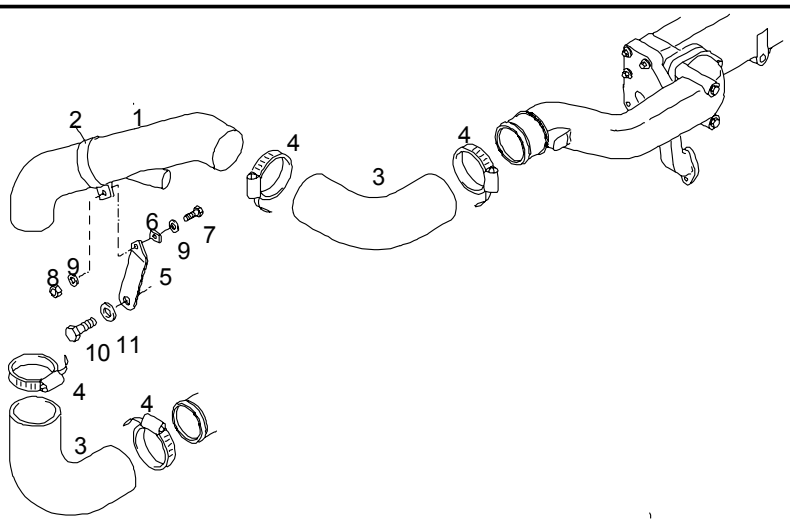

Pos	Part No.	Description	Pat	ME	All	Stk
1	51.06303-5368	coolant pipe 60MM X 2 X 740MM		0		1
2	06.67042-0113	>clamp >60,5-A4C		0		1
3	81.96305-0134	hose bend 60/60-40/40/40-MAN334-3-BL		0		2
4	06.67128-6323	hose clamp AS64-71M		0		4
5	81.06340-0252	bracket		0		1
6	81.90750-0649	square washer		0		1
7	06.01283-5115	hex bolt M8X25-8.8-MAN183-B1		0		1
8	06.11064-2114	hexagon nut M8-8-MAN183-B1		0		1

17.12.2003	Type V48 00	Pet	Chassis No.	Group 060-0	Figure 06 8542
15:39	Table coolant pipe exhaust gas recirculation		Reference No. 51.#0310-0174 00.00 - 00.00 heater feed circuit DM38 with/for exhaust gas recirculation D2866/76 LOH..		
Seite: 002					

Pos	Part No.	Description	Pat	ME	All	Stk
9	06.15013-0411	washer A8,4X16X1,6-200HV-MAN183-B1		0		2
10	06.01289-0182	hex bolt M16X30-8.8-MAN183-A3C		0		1
11	06.15013-0416	washer A17X30X3-200HV-MAN183-B1		0		1

17.12.2003	Type V48 00	Pet	Chassis No.	Group 060-0	Figure 06 8550
15:40	Table cooling water inlet socket to water pump		Reference No. 51.#0470-0312 00.00 - 00.00 cooling water inlet with flanged union D2865/66 LUH../E/G2866 DUH.. LOH..		
Seite: 001					

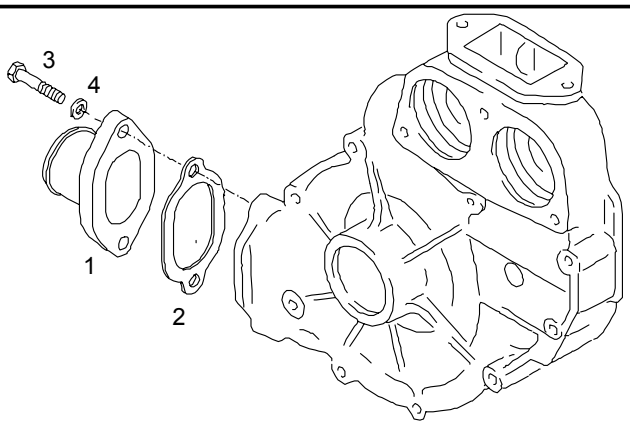

Pos	Part No.	Description	Pat	ME	All	Stk
1	88.54301-0023	flanged union	3497	0		1
1	51.06301-0981	cooling water pipe		0		1
2	51.06901-0111	gasket asbestos-free		0		1
3	06.01283-5218	hex bolt M10X35-8.8-MAN183-B1		0		2
4	06.15013-0412	washer A10,5X20X2-200HV-MAN183-B1		0		2

17.12.2003	Type V48 00	Pet	Chassis No.	Group 060-0	Figure 06 8229
15:41	Table cooling water thermostat		Reference No. 51.#0090-0156 00.00 - 00.00 cooling water thermostat 83 - deg.		
Seite: 001					

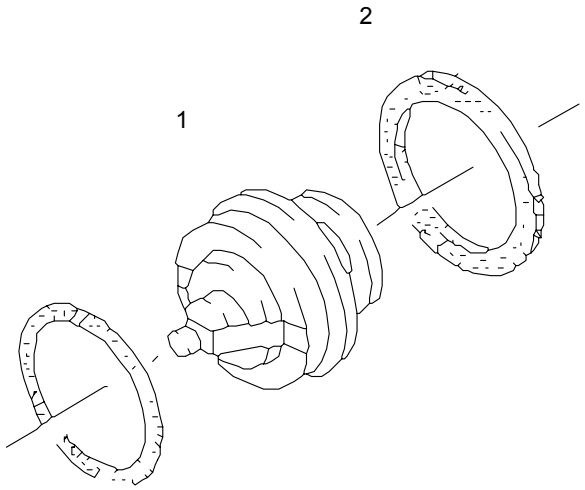

Pos	Part No.	Description	Pat	ME	All	Stk
1	51.06402-0060	cooling water thermostat 83 deg.		0		2
2	51.06901-0108	gasket asbestos-free		0		2
3	06.56341-2122	toric seal 60X4B-NBR3-60		0		2

17.12.2003	Type V48 00	Pet	Chassis No.	Group 060-0	Figure 06 8458
15:41	Table cover on water pump		Reference No. 51.#0470-0234 00.00 - 00.00 without cooling water inlet D2865/66/76 LOH..		
Seite: 001					

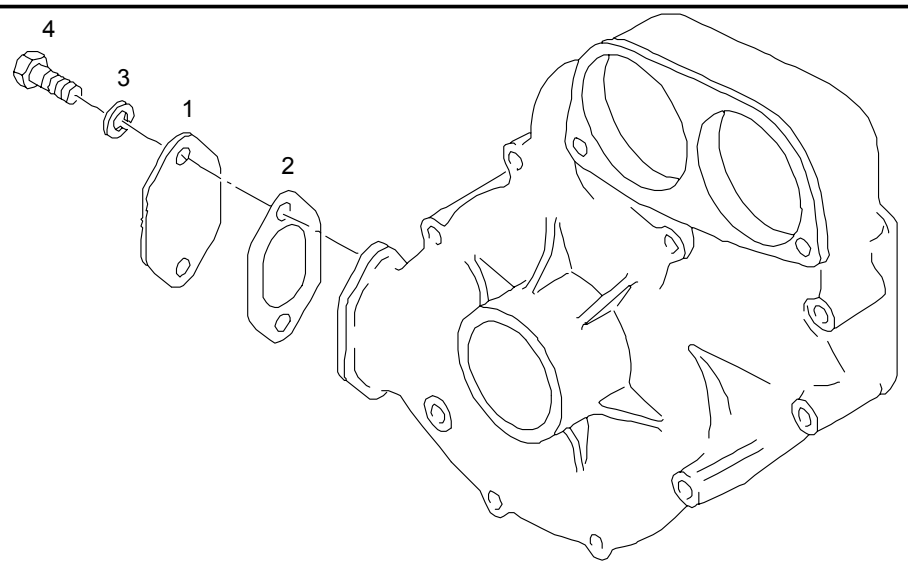

Pos	Part No.	Description	Pat	ME	All	Stk
1	51.06512-0033	cover		0		1
2	51.06901-0111	gasket asbestos-free		0		1
3	06.01283-5211	hex bolt M10X16-8.8-MAN183-B1		0		2
4	06.16049-0025	spring washer B10-FST-MAN183-B1		0		2

17.12.2003	Type V48 00	Pet	Chassis No.	Group 060-0	Figure 06 8544
15:42	Table gasket v-belt pulley for coolant pump		Reference No. 51.#0470-0447 00.00 - 00.00 3-flange water pump with/for exhaust gas recirculation (3X10) D2866/76 LOH..		
Seite: 001					

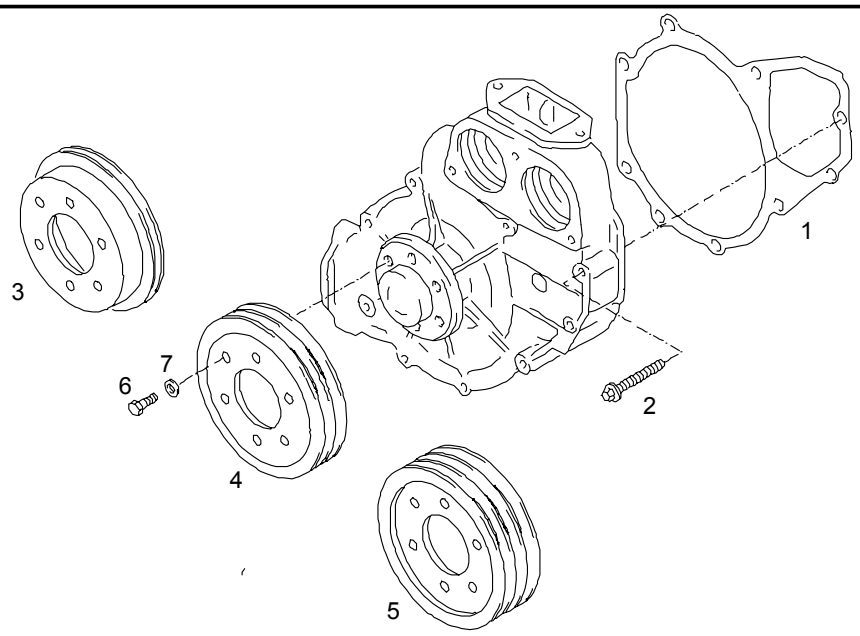

Pos	Part No.	Description	Pat	ME	All	Stk
1	51.06901-0147	gasket asbestos-free		0		1
2	06.03221-0612	screw with external torx BM8X55-8.8-MAN183-PHR with large flange		0		9
3		deleted				*
4		deleted				*
5	51.06503-0322	v-belt pulley 3Z142,6-6X90		0		1
6	06.01283-5112	hex bolt M8X18-8.8-MAN183-B1		0		6
7	06.15013-0411	washer A8,4X16X1,6-200HV-MAN183-B1		0		6

17.12.2003	Type V48 00	Pet	Chassis No.	Group 060-0	Figure 08 9401
15:42	Table heater flange with fish plate		Reference No. 51.#0310-0173 00.00 - 00.00 without heater feed circuit with retarder + exhaust gas recirculation D2866/76 LOH..		
Seite: 001					

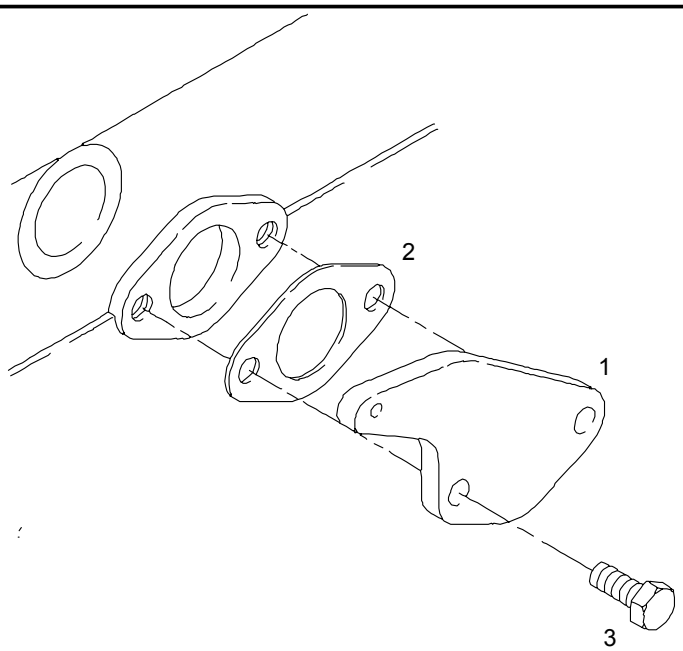

Pos	Part No.	Description	Pat	ME	All	Stk
1	51.98112-0238	flange		0		1
2	06.56254-3706	gasket 40X68X1,0-AFOE4-M3219-G1		0		1
3	06.01283-5217	hex bolt M10X30-8.8-MAN183-B1		0		2

17.12.2003	Type V48 00	Pet	Chassis No.	Group 060-0	Figure 06 8478
15:43	Table installation hydraulic pump on air compressor			Reference No. 51.#0140-0677 00.00 - 00.00 hydraulic pump 32CM3 on air compressor for fan drive	
Seite: 001					

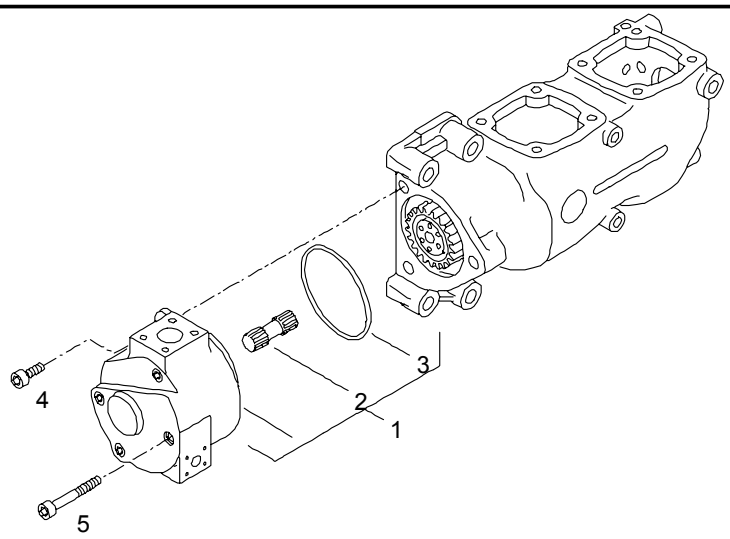

Pos	Part No.	Description	Pat	ME	All	Stk
1	51.06650-7003	hydraulic pump		0		1
2	51.06650-0001	>drive shaft		0		1
3	06.56936-2944	>toric seal >84X2-FPM1-70-GN		0		1
4	06.02099-0377	cylinder screw M8X25-10.9-MAN183-A2C		0		2
5	06.02191-0422	cylinder screw M8X100-10.9-MAN183-PHR		0		1

17.12.2003	Type V48 00	Pet	Chassis No.	Group 060-0	Figure 06 9345
15:43	Table repair kit for coolant pump		Reference No. 51.#0470-0447 00.00 - 00.00 3-flange water pump with/for exhaust gas recirculation (3X10) D2866/76 LOH..		
Seite: 001					

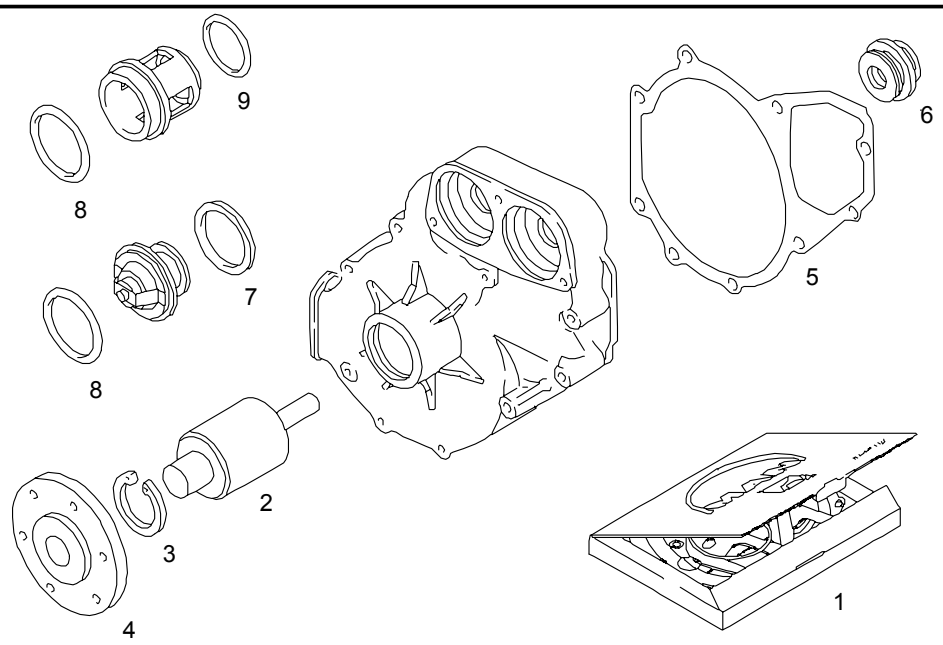

Pos	Part No.	Description	Pat	ME	All	Stk
1	51.06599-6082	repair kit for water pump		S		1
2	51.93410-0116	>water pump bearing		0		1
3	06.29020-0132	>circlip >55X2,00-ZNPHR5F		0		1
4	51.06504-0036	>hub		0		1
5	51.06901-0147	>gasket >asbestos-free		0		1
6	51.06520-0085	>o-ring seal		0		1
7	51.06901-0108	>gasket >asbestos-free		0		2
8	06.56341-2122	>toric seal >60X4B-NBR3-60		0		2
9	51.96501-0337	>toric seal >36,5X3,5-NBR3-60		0		2

17.12.2003	Type V48 00	Pet	Chassis No.	Group 080-0	Figure 08 8487
16:42	Table air distributor pipe		Reference No. 51.#0110-0521 00.00 - 00.00 charge air system (exhaust gas recirculation) with union curved D2866 LOH..D2876 LOH02/03		
Seite: 001					

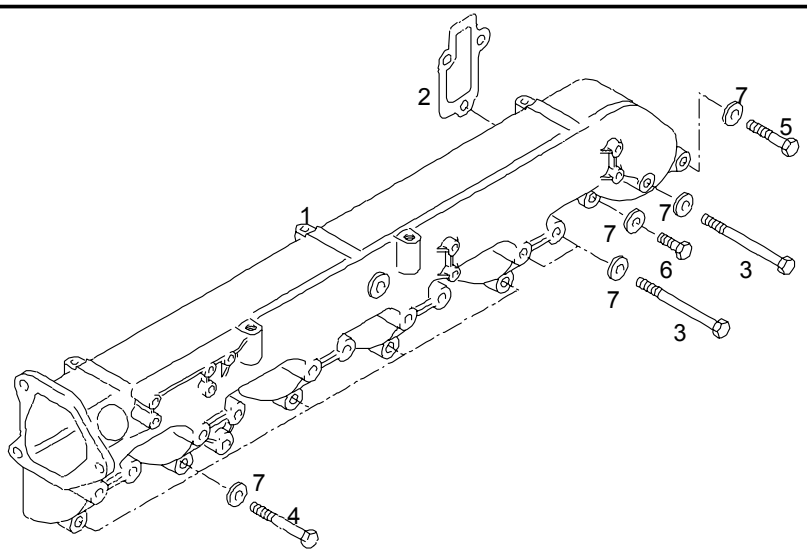

Pos	Part No.	Description	Pat	ME	All	Stk
1	51.08201-0353	air distributor pipe		0		1
2	51.08902-0194	gasket		0		6
3	06.01014-9128	hex shoulder stud M8X130-10.9-MAN183-PHR		0		11
4	06.01014-9120	hex shoulder stud M8X75-10.9-MAN183-PHR		0		5
5	06.01284-7122	hex bolt M8X55-10.9-MAN183-PHR		0		1
6	06.01284-7118	hex bolt M8X35-10.9-MAN183-PHR		0		1
7	51.90710-0371	washer 8,4X19X4-C45K		0		17

17.12.2003	Type V48 00	Pet	Chassis No.	Group 080-0	Figure 08 8258
16:43	Table drain plug and seal deletion starting aid		Reference No. 51.#0430-0345 00.00 - 00.00 without starting aid D2866/76 LOH..		
Seite: 001					

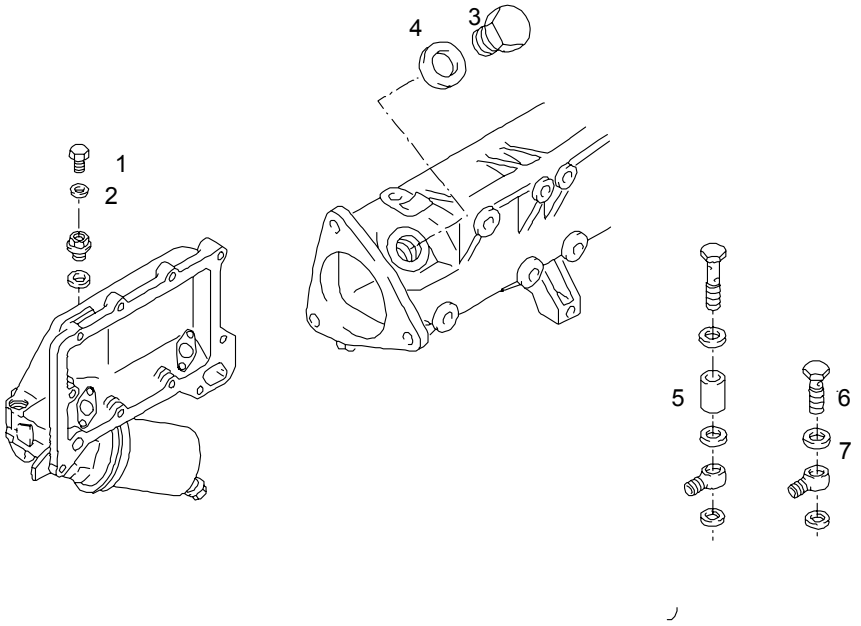

Pos	Part No.	Description	Pat	ME	All	Stk
1	06.08092-2142	drain plug CM10X1-ST-A3C		0		1
2	06.56180-0716	seal A10X16-CU	1400	0		1
2	06.56631-0104	seal with elastomer lip 10,7X16X1,5-ST/FPM1-80		0		1
3	51.90310-0117	drain plug M32X1,5X22-ST		0		1
4	06.56190-0734	seal A32X38-CU	0701	0		1
4	06.56631-0126	seal with elastomer lip 32,7X40X2,0-ST/FPM1-80		0		1
5		deleted				*

17.12.2003	Type V48 00	Pet	Chassis No.	Group 080-0	Figure 08 8258
16:43	Table drain plug and seal deletion starting aid		Reference No. 51.#0430-0345 00.00 - 00.00 without starting aid D2866/76 LOH..		
Seite: 002					

Pos	Part No.	Description	Pat	ME	All	Stk
6	51.98150-0175	hollow screw M14X1,5X26E-ST-SW19-P3A		0		1
7	06.56190-0706	seal A14X20-CU	1400	0		1
7	06.56631-0106	seal with elastomer lip 14,7X22X1,5-ST/FPM1-80		0		1

17.12.2003	Type V48 00	Pet	Chassis No.	Group 080-0	Figure 08 8467
16:43	Table exhaust elbow and cover plates		Reference No. 51.#0160-0290 00.00 - 00.00 exhaust elbow with/for exhaust gas recirculation D2876 LF..LOH..D2866 LF..LOH..		
Seite: 001					

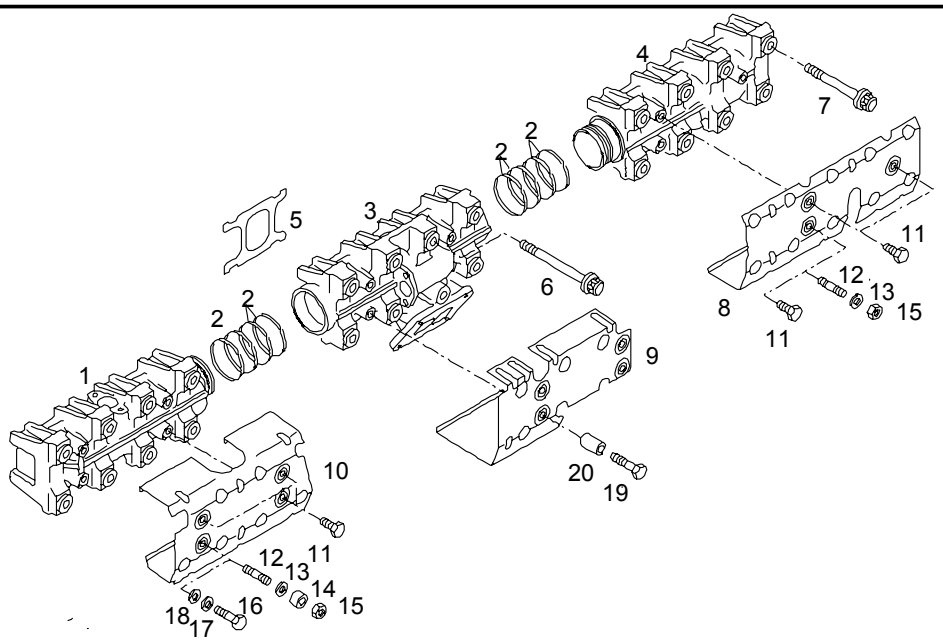

Pos	Part No.	Description	Pat	ME	All	Stk
1	51.08101-0914	exhaust elbow rear		0		1
2	51.98701-0082	multipiece oil ring set		S		8
3	51.08101-0964	exhaust manifold center		0		1
4	51.08101-0913	exhaust elbow front		0		1
5	51.08901-0152	gasket for exhaust pipe		0		6
6	51.90490-0054	screw with external torx M10X103-1.4980-E14-SD-HOCHWARM		0		1
7	51.90490-0032	screw with external torx M10X95-1.4980-E14-SD-HOCHWARMF		0		23

17.12.2003	Type V48 00	Pet	Chassis No.	Group 080-0	Figure 08 8467
16:43	Table exhaust elbow and cover plates		Reference No. 51.#0160-0290 00.00 - 00.00 exhaust elbow with/for exhaust gas recirculation D2876 LF..LOH..D2866 LF..LOH..		
Seite: 002					

Pos	Part No.	Description	Pat	ME	All	Stk
8	51.08120-0216	guard plate front		0		1
9	51.08120-0211	guard plate center		0		1
10	51.08120-0218	heat protection plate rear		0		1
11	06.01289-0274	hex bolt M8X12-8.8-C3J		0		6
		item number 12 - 15 deleted				*
16	06.01289-0272	hex bolt M8X20-8.8-C3J		0		1
17	51.90710-0371	washer 8,4X19X4-C45K		0		1
18	06.15013-0411	washer A8,4X16X1,6-200HV-MAN183-B1		0		1
19	06.01283-5120	hex bolt M8X45-8.8-MAN183-B1		0		4
20	51.91701-0737	bush 9X18X35-ST35NBK		0		4

17.12.2003	Type V48 00	Pet	Chassis No.	Group 080-0	Figure 08 8488
16:44	Table intercooler elbow on air distributor pipe		Reference No. 51.#0110-0521 00.00 - 00.00 charge air system (exhaust gas recirculation) with union curved D2866 LOH..D2876 LOH02/03		
Seite: 001					

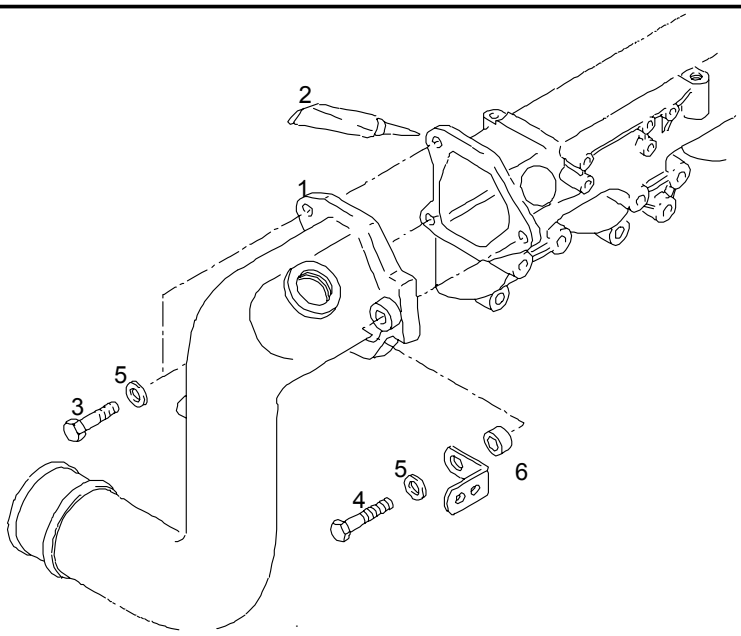

Pos	Part No.	Description	Pat	ME	All	Stk
1	51.09411-0381	intercooler elbow		0		1
2	04.10394-9272	sealants 300 ML - cartridge with nozzle		M		NB
3	06.01283-5222	hex bolt M10X55-8.8-MAN183-B1		0		2
4	06.01284-3224	hex bolt M10X65-10.9-MAN183-A3C		0		1
5	06.15013-0412	washer A10,5X20X2-200HV-MAN183-B1		0		3
6	51.90710-0309	washer 11X22X5-9SMNPB28		0		1

17.12.2003	Type V48 00	Pet	Chassis No.	Group 080-0	Figure 09 8079
16:44	Table intercooler elbow with/for turbocharger		Reference No. 51.#0110-0521 00.00 - 00.00 charge air system (exhaust gas recirculation) with union curved D2866 LOH..D2876 LOH02/03		
Seite: 001					

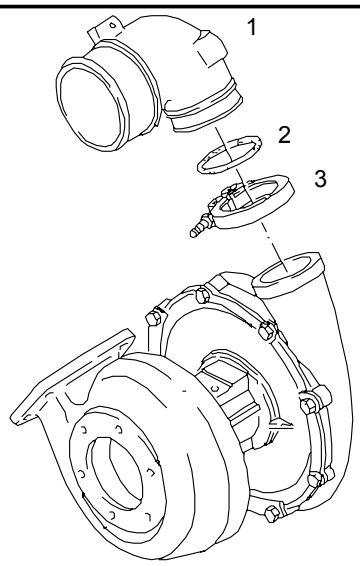

Pos	Part No.	Description	Pat	ME	All	Stk
1	51.09411-0128	intercooler elbow		0		1
2	06.56936-2479	toric seal 63X2,5-FPM1-70-GN		0		1
3	51.97445-0033	profiled clamp 76X20-W1-2		0		1

17.12.2003	Type V48 00	Pet	Chassis No.	Group 080-0	Figure 08 8470
16:45	Table modulus and lines with exhaust gas reurcucation		Reference No. 51.#0160-0290 35.99 - 00.00 exhaust elbow with/for exhaust gas recirculation D2876 LF..LOH..D2866 LF..LOH..		
Seite: 001					

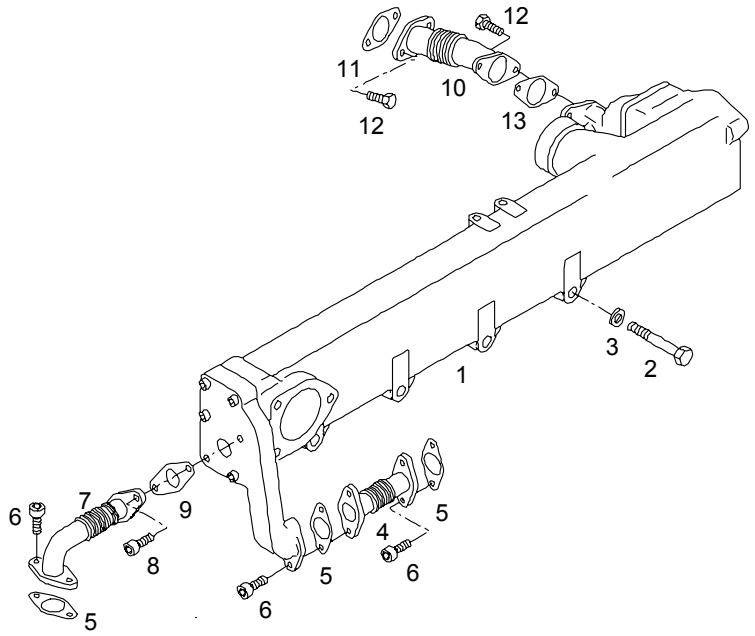

Pos	Part No.	Description	Pat	ME	All	Stk
1		see plate: modulus with exhaust gas reurcucation				*
2	06.01289-0154	hex bolt M10X85-8.8-MAN183-A3C		0		4
3	06.15013-0412	washer A10,5X20X2-200HV-MAN183-B1		0		4
4	51.08153-0003	exhaust pipe exhaust gas recirculation	0300	0		1
4	51.08153-0010	exhaust pipe exhaust gas recirculation		0		1
5	51.08901-0121	gasket		0		3
6	51.90030-0083	cylinder screw M8X20-GA-WARMFEST-C3J		0		6
7	51.08153-0004	exhaust pipe exhaust gas recirculation	0300	0		1

17.12.2003	Type V48 00	Pet	Chassis No.	Group 080-0	Figure 08 8470
16:45	Table modulus and lines with exhaust gas reurcucation		Reference No. 51.#0160-0290 35.99 - 00.00 exhaust elbow with/for exhaust gas recirculation D2876 LF..LOH..D2866 LF..LOH..		
Seite: 002					

Pos	Part No.	Description	Pat	ME	All	Stk
7	51.08153-0011	exhaust pipe exhaust gas recirculation		0		1
8	51.90030-0086	cylinder screw M8X58-GA-WARMFEST		0		2
9	51.08901-0117	gasket		0		1
10	51.08153-0006	exhaust pipe exhaust gas recirculation		0		1
11	51.08901-0120	gasket		0		1
12	06.01283-5114	hex bolt M8X22-8.8-MAN183-B1		0		4
13	51.08901-0124	gasket		0		1

17.12.2003	Type V48 00	Pet	Chassis No.	Group 080-0	Figure 08 8492
16:45	Table modulus with exhaust gas reurcucation		Reference No. 51.#0160-0290 00.00 - 00.00 exhaust elbow with/for exhaust gas recirculation D2876 LF..LOH..D2866 LF..LOH..		
Seite: 001					

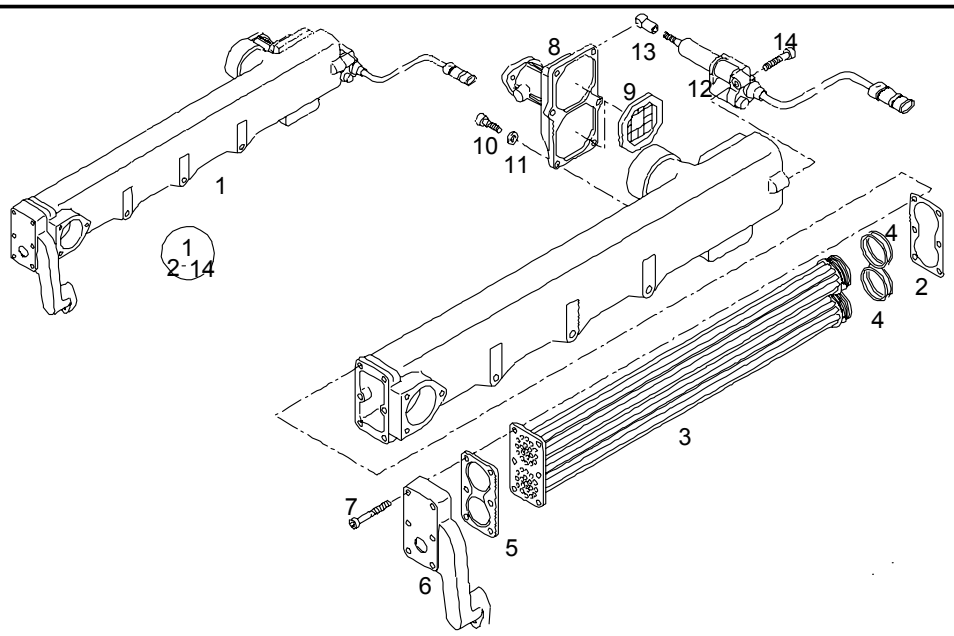

Pos	Part No.	Description	Pat	ME	All	Stk
1	51.08100-7028	modulus exhaust gas recirculation		0		1
2	51.08901-0115	>gasket		0		1
3	51.08152-0007	>heat exchanger >insert >FUER AGR-MODUL		0		1
4	06.56937-1884	>toric seal >39,34X2,62N-FPM2-70-GN		0		4
5	51.08901-0114	>gasket		0		1
6	51.08151-0003	>housing >FUER AGR-MODUL		0		1
7	06.02191-0414	>cylinder screw >M8X50-10.9-MAN183-PHR		0		4
8	51.08150-6010	>blocking flap >for >exhaust gas recirculation		0		1

17.12.2003	Type V48 00	Pet	Chassis No.	Group 080-0	Figure 08 8492
16:45	Table modulus with exhaust gas reurcucation		Reference No. 51.#0160-0290 00.00 - 00.00 exhaust elbow with/for exhaust gas recirculation D2876 LF..LOH..D2866 LF..LOH..		
Seite: 002					

Pos	Part No.	Description	Pat	ME	All	Stk
9	51.08150-6019	>check valve		0		2
10	06.02099-0377	>cylinder screw >M8X25-10.9-MAN183-A2C		0		6
11	06.15013-0411	>washer >A8,4X16X1,6-200HV-MAN183-B1		0		6
12	51.08150-0023	>air cylinder		0		1
13	06.36090-0203	>angle joint >CS13		0		1
14	06.02192-0412	>cylinder screw >M8X40-8.8-A2C		0		1

17.12.2003	Type V48 00	Pet	Chassis No.	Group 090-0	Figure 09 8198
16:51	Table air intake on turbocharger		Reference No. 51.#0300-0285 00.00 - 00.00 air intake 10- deg. downwards D2866/76 LOH..		
Seite: 001					

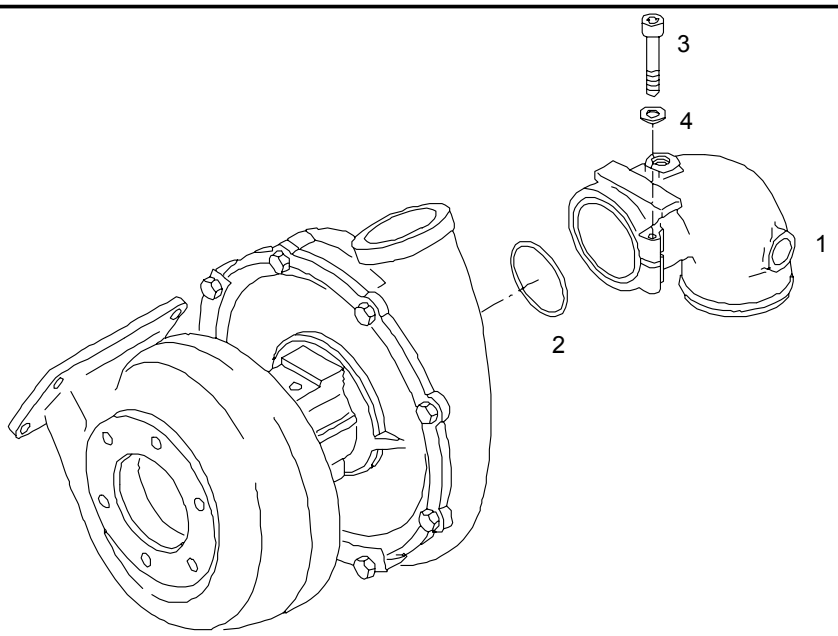

Pos	Part No.	Description	Pat	ME	All	Stk
1	51.09402-0072	intake manifold	1399	0		1
1	51.09402-0086	intake manifold		0		1
2	06.56930-3307	toric seal 102X5-NBR3-70		0		1
3	06.02099-0192	cylinder screw M10X65-8.8-A3C		0		1
4	06.15013-0412	washer A10,5X20X2-200HV-MAN183-B1		0		1

17.12.2003	Type V48 00	Pet	Chassis No.	Group 090-0	Figure 09 8232
16:52	Table elbow nipple for exhaust gas recirculation modulus		Reference No. 51.#0160-0324 00.00 - 00.00 accessory for exhaust gas recirculation (not installed)		
Seite: 001					

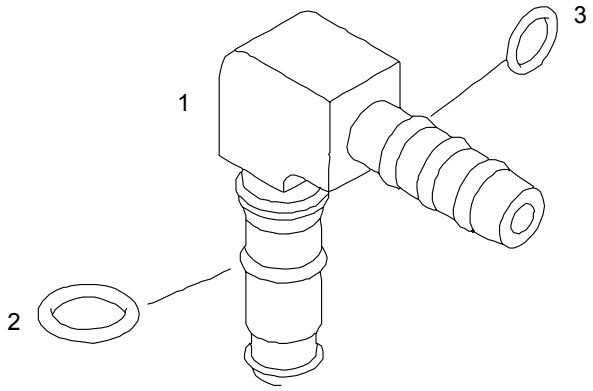

Pos	Part No.	Description	Pat	ME	All	Stk
1	81.98181-6347	angle union W-S6-D4		0		1
2	06.56939-0050	>toric seal >5,5X1-NBR--70-RT		0		1
3	06.56939-0051	>toric seal >3,5X1,5-NBR--70-KAELTE >resistand to cold		0		1

17.12.2003	Type V48 00	Pet	Chassis No.	Group 090-0	Figure 09 8225
16:53	Table turbocharger with mounting parts and lines		Reference No. 51.#0070-0503 00.00 - 00.00 turbocharger D2866 LOH27/28/35		
Seite: 001					

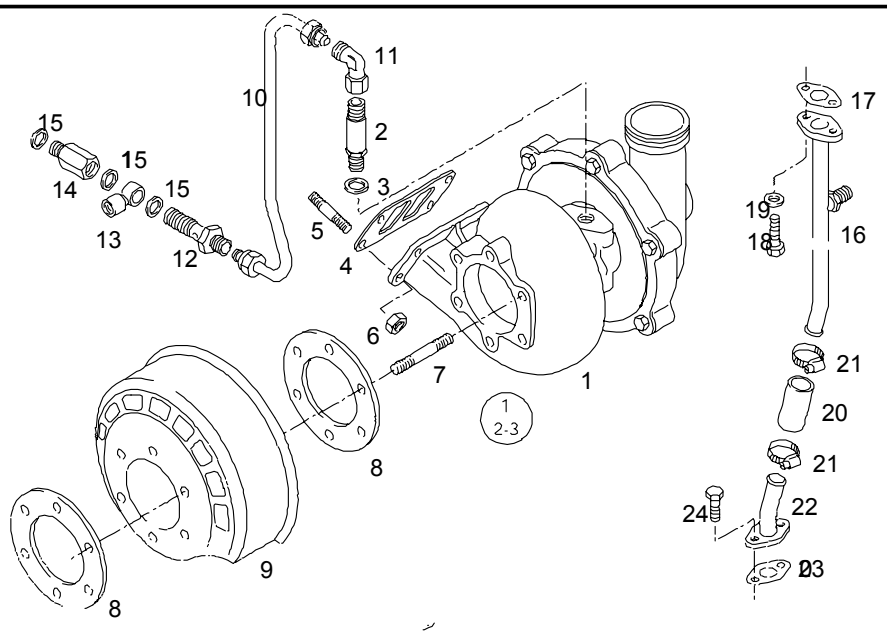

Pos	Part No.	Description	Pat	ME	All	Stk
1	51.09100-7538	turbocharger		0		1
2	51.98130-0442	>threaded union >for >turbocharger		0		1
3	06.56631-0107	>seal >with elastomer lip >16,7X24X1,5-ST/FPM1-80		0		1
4	51.08901-0151	gasket		0		1
5	51.90201-0254	stud M10X30-X5NICRTI2615		0		4
6	06.11241-0306	hex lock nut AM10-10-MAN183-B1		0		4
7	51.90201-0173	stud M10X30-21CRMOV57-C3J		0		6
8	51.15901-0012	gasket asbestos-free		0		2

17.12.2003	Type V48 00	Pet	Chassis No.	Group 090-0	Figure 09 8225
16:53	Table turbocharger with mounting parts and lines		Reference No. 51.#0070-0503 00.00 - 00.00 turbocharger D2866 LOH27/28/35		
Seite: 002					

Pos	Part No.	Description	Pat	ME	All	Stk
9	51.09141-0031	heat shield		0		1
10	51.05703-5125	oil pressure pipe		0		1
11	06.71230-2104	elbow union L12-A4C		0		1
12	51.98130-0435	reducing union		0		1
13	51.98103-0082	ring union		0		1
14	51.98130-0242	reducing union		0		1
15	06.56631-0107	seal with elastomer lip 16,7X24X1,5-ST/FPM1-80		0		3
16	51.05703-5126	oil return pipe soldered		0		1
17	51.96601-0575	gasket		0		1
18	06.01283-5115	hex bolt M8X25-8.8-MAN183-B1		0		2
19	06.15013-0411	washer A8,4X16X1,6-200HV-MAN183-B1		0		2
20	51.96330-0346	hose 22X65-1		0		1
21	51.97440-0126	spring clip 29X12-CK75		0		2
22	51.05702-5736	oil return pipe assembly soldered		0		1
23	51.96601-0546	gasket 20X44X9X0,5-AFOE4 asbestos-free		0		1
24	06.01283-5115	hex bolt M8X25-8.8-MAN183-B1		0		2

17.12.2003	Type V48 00	Pet	Chassis No.	Group 100-0	Figure 10 8102
16:53	Table injection lines		Reference No. 51.#0210-0759 00.00 - 00.00 injection system + MS5/5.32-EDC - governor D2866 LOH28		
Seite: 001					

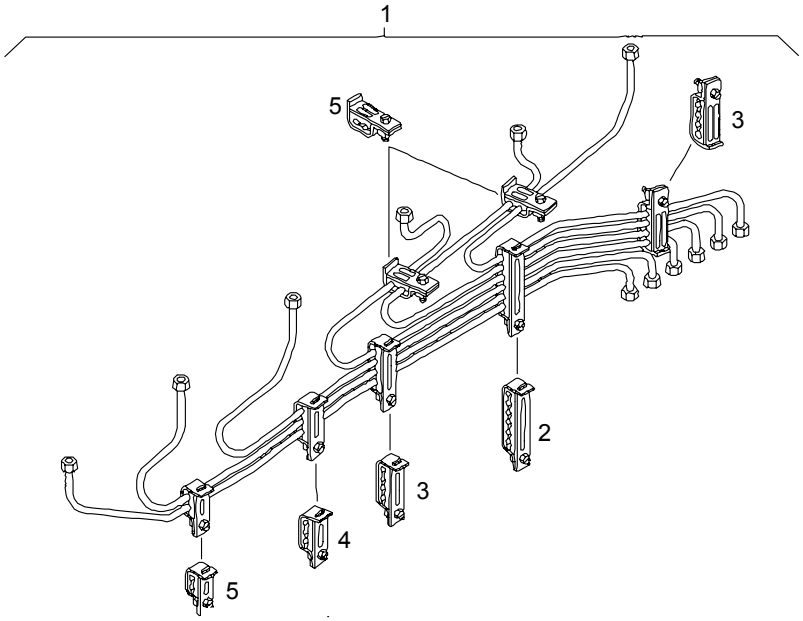

Pos	Part No.	Description	Pat	ME	All	Stk
1	51.10300-6023	injection line set cylinders 1-6 hydraulically pre-compressed		0		1
2	51.97401-6067	>mounting clamp >for injection pipes >B-6-ST/FPM-FE/ZN8C		0		1
3	51.97401-6066	>mounting clamp >for injection pipes >B-4-ST/FPM-FE/ZN8C		0		2
4	51.97401-6069	>mounting clamp >for injection pipes >C-3-ST/FPM-FE/ZN8C		0		1
5	51.97401-6064	>mounting clamp >for injection pipes >B-2-ST/FPM-FE/ZN8C		0		3

17.12.2003	Type V48 00	Pet	Chassis No.	Group 100-0	Figure 10 8101
16:54	Table nozzle holder with nozzle cartridge with nozzle pressure flange			Reference No. 51.#0210-0759 00.00 - 00.00 injection system + MS5/5.32-EDC - governor D2866 LOH28	
Seite: 001					

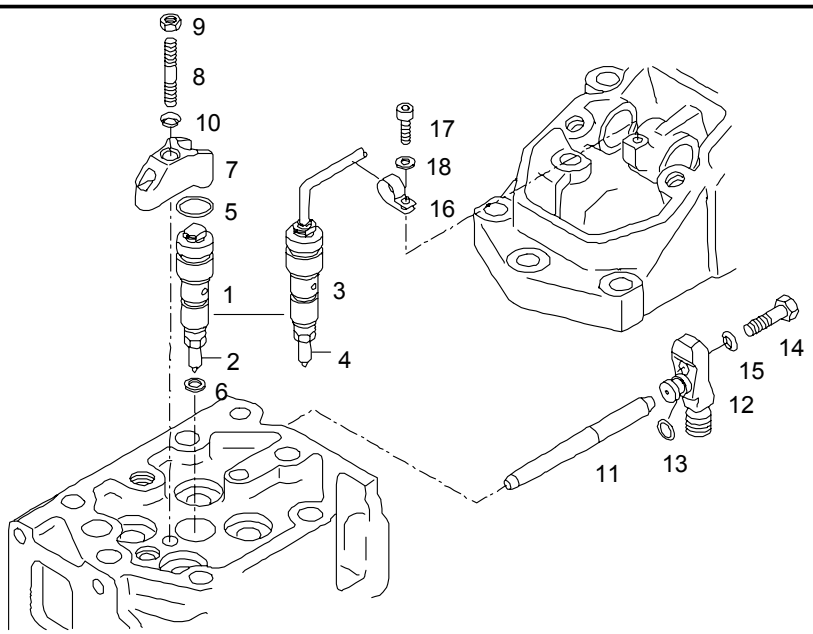

Pos	Part No.	Description	Pat	ME	All	Stk
1	51.10100-7430	nozzle holder with nozzle	1200	0		5
1	51.10100-7453	nozzle holder assembly with nozzle		0		5
	51.10101-6031	>nozzle holder	1200	0		5
	51.10101-6038	>nozzle holder		0		5
2	51.10102-0259	>injection nozzle		0		5
3	51.10100-7452	nozzle holder with nozzle needle movement sensor		0		1
	51.10101-6039	>nozzle holder		0		1
4	51.10102-0259	>injection nozzle		0		1
5	06.56936-6409	toric seal 24,6X2,5N-FPM1-70-GN		0		6

17.12.2003	Type V48 00	Pet	Chassis No.	Group 100-0	Figure 10 8101
16:54	Table nozzle holder with nozzle cartridge with nozzle pressure flange			Reference No. 51.#0210-0759 00.00 - 00.00 injection system + MS5/5.32-EDC - governor D2866 LOH28	
Seite: 002					

Pos	Part No.	Description	Pat	ME	All	Stk
6	51.98701-0111	seal		0		6
7	51.10104-0036	pressure flange		0		6
8	06.06139-0046	stud M8X55-10.9-MAN183-PHR		0		6
9	06.11116-0101	hex collar nut M8-10-MAN183-PHR		0		6
10	06.15142-0102	retaining washer C8,4-ST-A2C		0		6
11	51.10101-6036	pressure pipe neck to nozzle holder		0		6
12	51.10303-0989	bracket		0		6
13	06.56936-0459	toric seal 9X3N-FPM1-70-GN		0		6
14	06.01285-7218	hex bolt M10X35-12.9-MAN183-PHR		0		6
15	06.15140-0103	retaining washer C10,5		0		6
16		deleted				*
17	06.02192-0304	cylinder screw M6X12-8.8-A2C		0		1
18	06.15013-0409	washer A6,4X12X1,6-200HV-MAN183-B1		0		1

17.12.2003	Type V48 00	Pet	Chassis No.	Group 110-0	Figure 27 8009
16:55	Table electronic control unit EDC for electronic injection pump			Reference No. 51.#0210-0759 00.00 - 00.00 injection system + MS5/5.32-EDC - governor D2866 LOH28	
Seite: 001					

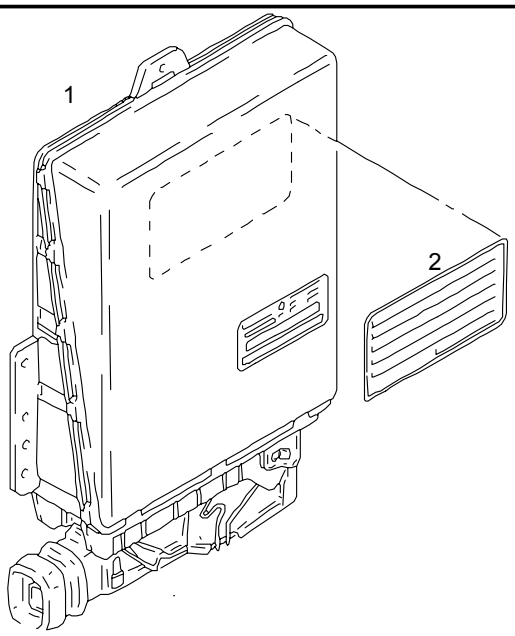

Pos	Part No.	Description	Pat	ME	All	Stk
1	51.11615-7245	electronic control unit electronic diesel control		0		1
2	51.97801-0229	instruction plate		0		1

17.12.2003	Type V48 00	Pet	Chassis No.	Group 110-0	Figure 11 8380
16:55	Table injection pump with mounting parts			Reference No. 51.#0210-0759 00.00 - 00.00 injection system + MS5/5.32-EDC - governor D2866 LOH28	
Seite: 001					

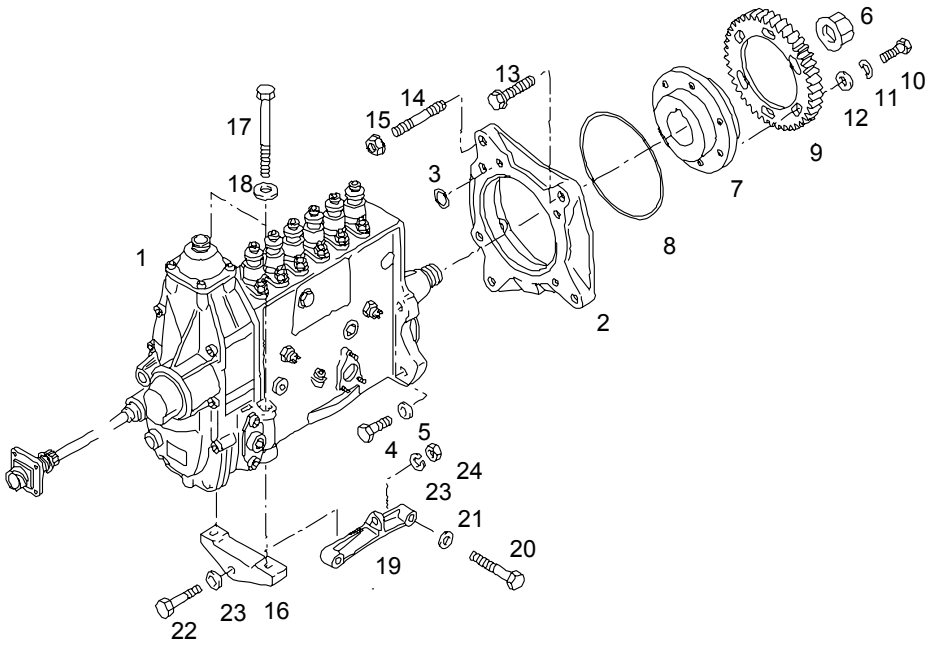

Pos	Part No.	Description	Pat	ME	All	Stk
1	51.11103-7668	injection pump		0		1
		>for individual parts see >parts catalogue >model v90-.. >inj.pump individual parts				*
2	51.11401-0142	mounting flange for injection pump		0		1
3	06.56938-0522	toric seal 10X3-FPM1-80-GN		0		1
4	06.01285-7218	hex bolt M10X35-12.9-MAN183-PHR		0		4
5	06.15231-0206	washer 10,5X25X4-ST60-MAN183-B1		0		4
6	51.90640-0031	hex collar nut M30X1,5-15-C45-SW41-ZNPHR5F		0		1

17.12.2003	Type V48 00	Pet	Chassis No.	Group 110-0	Figure 11 8380
16:55	Table injection pump with mounting parts			Reference No. 51.#0210-0759 00.00 - 00.00 injection system + MS5/5.32-EDC - governor D2866 LOH28	
Seite: 002					

Pos	Part No.	Description	Pat	ME	All	Stk
7	51.11139-0039	hub for injection pump	2900	0		1
7	51.11139-0043	hub for injection pump		0		1
8	51.96501-0346	toric seal 138X3,5-FPM1-70-GN		0		1
9	51.11301-0163	drive gear	2900	0		1
9	51.11301-0223	drive gear injection pump		0		1
10	06.01284-5113	hex bolt M8X20-10.9-MAN183-B1	2900	0		6
10	06.01284-7115	hex bolt M8X25-10.9-MAN183-PHR		0		6
11	06.16043-0210	spring washer B8-FST-A3C		0		6
12	51.90710-0371	washer 8,4X19X4-C45K		0		6
13	06.02202-0205	hex collar bolt M10X35		0		3
14	06.06226-0809	stud M10X35-10.9		0		1
15	51.90501-0050	hex collar nut M10-15-CK45V-SW13		0		1
16	51.11402-0083	bracket		0		1
17	06.01013-7125	hex shoulder stud M8X100-8.8-MAN183-B1		0		2
18	81.90710-0080	washer 60X72X5-C60		0		2
19	51.11402-0092	support		0		1
20	06.01289-0149	hex bolt M12X50-8.8-MAN183-A3C		0		2

17.12.2003	Type V48 00	Pet	Chassis No.	Group 110-0	Figure 11 8380
16:55	Table injection pump with mounting parts			Reference No. 51.#0210-0759 00.00 - 00.00 injection system + MS5/5.32-EDC - governor D2866 LOH28	
Seite: 003					

Pos	Part No.	Description	Pat	ME	All	Stk
21	51.90710-0328	washer 12,5X24X4-C45K		0		2
22	06.01284-7221	hex bolt M10X50-10.9-MAN183-PHR		0		1
23	51.90710-0207	washer 11X21X3-9SMNPB28K		0		2
24	06.11069-0062	hexagon nut M10-10-A3C		0		1

17.12.2003	Type V48 00	Pet	Chassis No.	Group 120-0	Figure 12 8278
16:56	Table drip oil line on nozzle holders		Reference No. 51.#0150-0794 00.00 - 00.00 fuel filter with precleaner+hand pump D2866/76 LOH..		
Seite: 001					

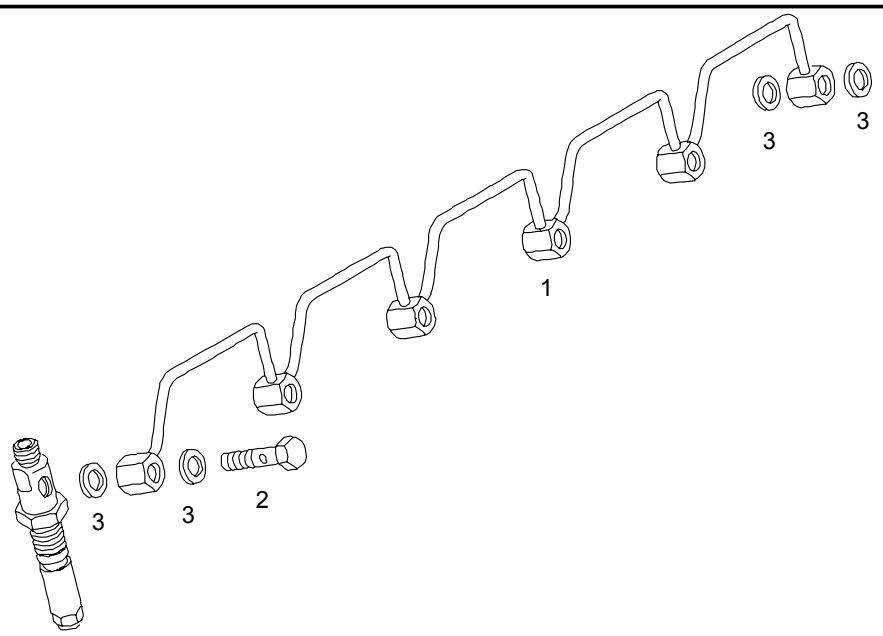

Pos	Part No.	Description	Pat	ME	All	Stk
1	51.12305-5163	drip oil line soldered		0		1
2	51.98150-0177	hollow screw M8X22E-42CRMOS4V-A3C		0		5
3	06.56631-0125	seal with elastomer lip 8,7X14X1-ST/FPM1-80		0		12

17.12.2003	Type V48 00	Pet	Chassis No.	Group 120-0	Figure 12 8279
16:57	Table drip oil line steel tube to injection pump		Reference No. 51.#0150-0794 00.00 - 00.00 fuel filter with precleaner+hand pump D2866/76 LOH..		
Seite: 001					

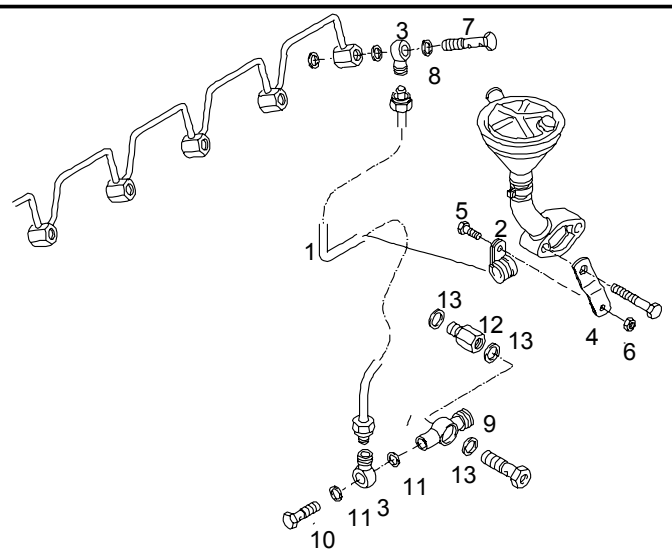

Pos	Part No.	Description	Pat	ME	All	Stk
1	51.12305-5104	drip oil line		0		1
2	06.67300-0626	>clamp >D1-6X15-W1-EPDM-2		0		1
3	51.98103-0062	ring union D 8,1 / M 10X1		0		2
4	51.97480-0891	bracket		0		1
5	06.01283-4911	hex bolt M6X16-8.8-MAN183-B1		0		1
6	06.11064-2112	hexagon nut M6-8-MAN183-B1		0		1
7	51.98150-0162	hollow screw M8X40D-42CRMOS4V-A3C	1800	0		1
7	51.98150-0178	hollow screw M8X31D-42CRMOS4V-A3C		0		1

17.12.2003	Type V48 00	Pet	Chassis No.	Group 120-0	Figure 12 8279	
16:57	Table drip oil line steel tube to injection pump			Reference No. 51.#0150-0794 00.00 - 00.00 fuel filter with precleaner+hand pump D2866/76 LOH..		
Seite: 002						

Pos	Part No.	Description	Pat	ME	All	Stk
8	06.56631-0125	seal with elastomer lip 8,7X14X1-ST/FPM1-80		0		1
9	51.98101-0052	twin ring union		0		1
10	06.78340-0101	hollow screw 4-5		0		1
11	06.56631-0125	seal with elastomer lip 8,7X14X1-ST/FPM1-80		0		2
12	06.78412-0305	threaded union		0		1
13	06.56631-0106	seal with elastomer lip 14,7X22X1,5-ST/FPM1-80		0		3

17.12.2003	Type V48 00	Pet	Chassis No.	Group 120-0	Figure 12 8361
16:57	Table fuel lines		Reference No. 51.#0150-0794 00.00 - 00.00 fuel filter with precleaner+hand pump D2866/76 LOH..		
Seite: 001					

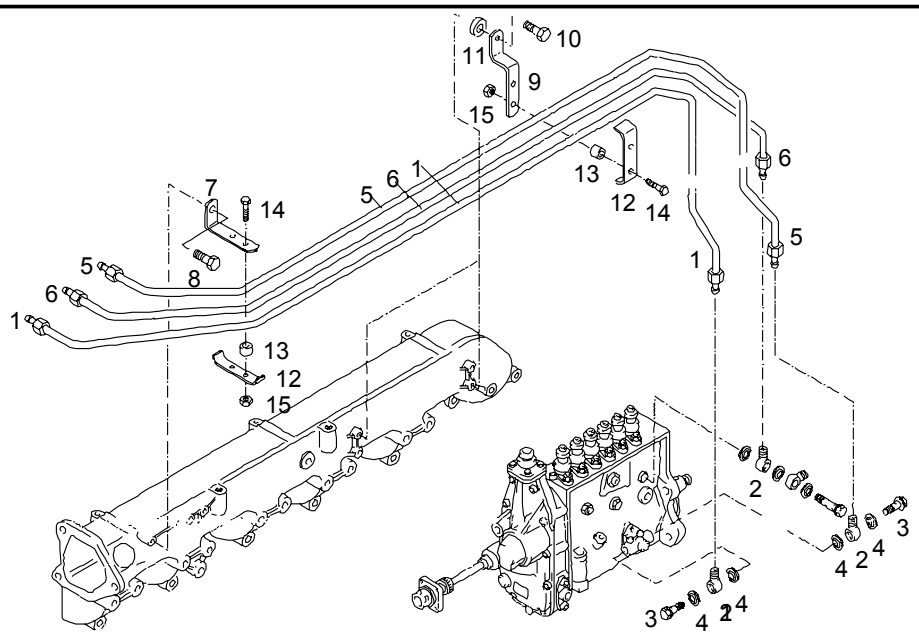

Pos	Part No.	Description	Pat	ME	All	Stk
1	51.12304-5351	fuel line		0		1
2	51.98103-0037	ring union		0		3
3	51.98150-0175	hollow screw M14X1,5X26E-ST-SW19-P3A		0		2
4	06.56190-0706	seal A14X20-CU	1400	0		4
4	06.56631-0106	seal with elastomer lip 14,7X22X1,5-ST/FPM1-80		0		4
		hollow screw ring union see starting aid				*
5	51.12304-5352	fuel line fuel pump filter		0		1

17.12.2003	Type V48 00	Pet	Chassis No.	Group 120-0	Figure 12 8361
16:58	Table fuel lines		Reference No. 51.#0150-0794 00.00 - 00.00 fuel filter with precleaner+hand pump D2866/76 LOH..		
Seite: 002					

Pos	Part No.	Description	Pat	ME	All	Stk
6	51.12304-5353	fuel line filter injection pump		0		1
7	51.97485-0112	bracket		0		1
8	06.01283-5215	hex bolt M10X25-8.8-MAN183-B1		0		1
9	51.97480-0989	bracket		0		2
10	06.01283-5115	hex bolt M8X25-8.8-MAN183-B1		0		2
11	51.90710-0080	washer 9X19X4-9SMNPB28K		0		1
12	51.97401-0515	mounting clamp		0		3
13	51.91701-0498	bush 7X12X9,5-ST35NBK		0		6
14	06.01283-4914	hex bolt M6X22-8.8-MAN183-B1		0		6
15	06.11064-2112	hexagon nut M6-8-MAN183-B1		0		6

17.12.2003	Type V48 00	Pet	Chassis No.	Group 120-0	Figure 12 8307
16:58	Table fuel prefilter 51.12501-7123/7156 with components		Reference No. 51.#0150-0794 00.00 - 00.00 fuel filter with precleaner+hand pump D2866/76 LOH..		
Seite: 001					

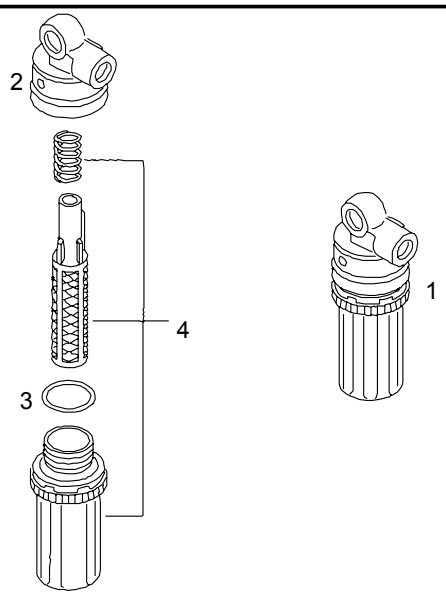

Pos	Part No.	Description	Pat	ME	All	Stk
1	51.12501-7156	fuel prefilter assembly		0		1
2	81.12103-0020	>housing cover		0		1
3	81.96503-0041	>toric seal >22X4-NBR--70		0		1
4	81.11101-6013	>parts kit >fuel prefilter		S		1

17.12.2003	Type V48 00	Pet	Chassis No.	Group 120-0	Figure 11 8304
16:59	Table fuel pump with mounting		Reference No. 51.#0150-0794 00.00 - 00.00 fuel filter with precleaner+hand pump D2866/76 LOH..		
Seite: 001					

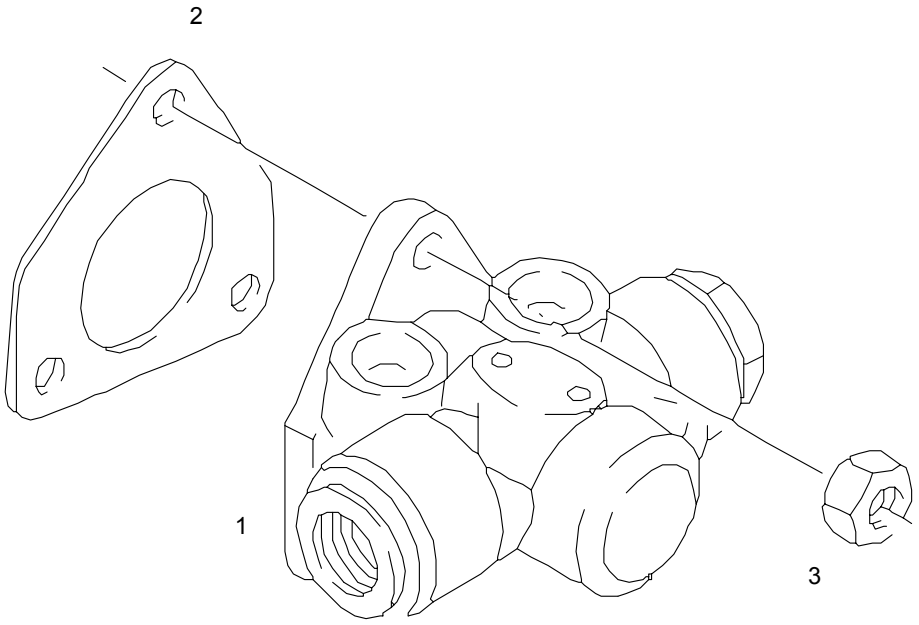

Pos	Part No.	Description	Pat	ME	All	Stk
1	51.12101-7101	fuel pump rme-resistant >for individual parts see >parts catalogue >model v90-.. >inj.pump individual parts		0		1 *
2	81.11904-0014	sealing plate asbestos-free		0		1
3	06.11064-2112	hexagon nut M6-8-MAN183-B1		0		3

17.12.2003	Type V48 00	Pet	Chassis No.	Group 120-0	Figure 12 8079
16:59	Table hand primer 51.12150-7014 with components		Reference No. 51.#0150-0794 00.00 - 00.00 fuel filter with precleaner+hand pump D2866/76 LOH..		
Seite: 001					

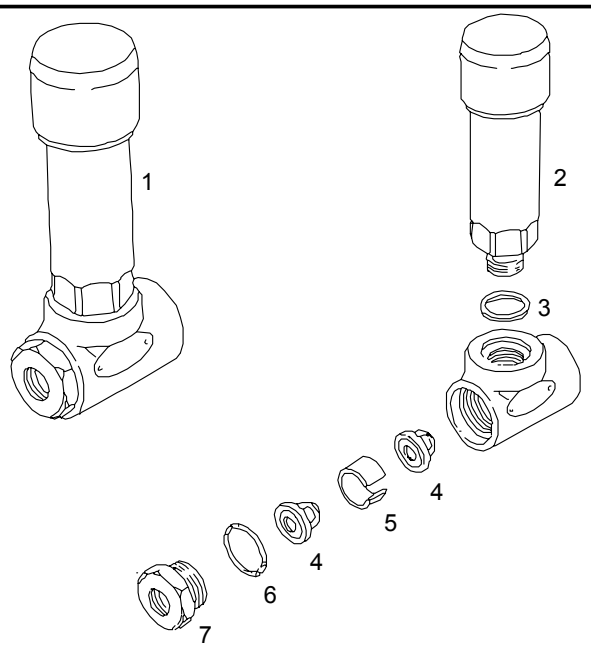

Pos	Part No.	Description	Pat	ME	All	Stk
1	51.12150-7014	hand primer RME-BESTAENDIG		0		1
2	51.12150-7015	>lift pump >RME-BESTAENDIG		0		1
3	81.11904-0028	>seal >asbestos-free		0		1
4	81.12108-0010	>valve		0		2
5	81.12112-0002	>sleeve		0		1
6	06.56938-0872	>toric seal >16,3X2,4N-FPM1-80-GN		0		1
7	81.98130-0222	>reducing nipple		0		1

17.12.2003	Type V48 00	Pet	Chassis No.	Group 120-0	Figure 12 9262
17:01	Table parallel fuel filter unheated with components 51.12501-7206			Reference No. 51.#0150-0794 00.00 - 00.00 fuel filter with precleaner+hand pump D2866/76 LOH..	
Seite: 001					

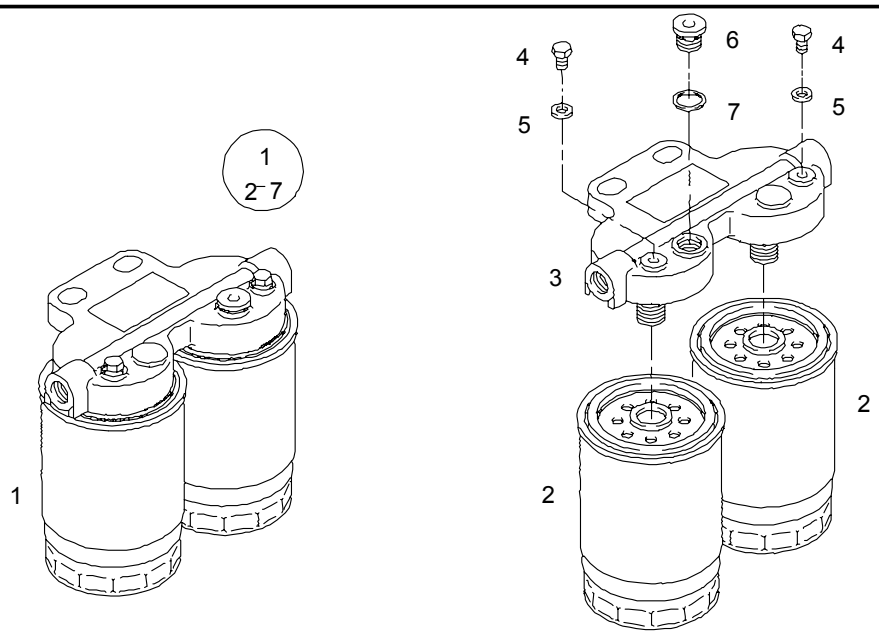

Pos	Part No.	Description	Pat	ME	All	Stk
1	51.12501-7206	fuel filter assembly unheated		0		1
2	51.12503-0040	>expendable fuel filter >rme-resistant >drain valve		0		2
3	81.12504-0028	>cover		0		1
4	81.90490-0642	>hex collar bolt >M8X12-8.8-A2C		0		2
5	06.56180-0709	>seal >A8X11,5-CU		0		2
6	06.08042-0603	>drain plug >M14X1,5-ST-A3C		0		1
7	06.56190-0705	>seal >A14X18-CU		0		1

17.12.2003	Type V48 00	Pet	Chassis No.	Group 192-0	Figure 01 8440
17:05	Table drain plug and seal on crankcase		Reference No. 51.#0410-0513 00.00 - 00.00 engine mounting without engine support D2866 LOH27-35 D2876 LOH02		
Seite: 001					

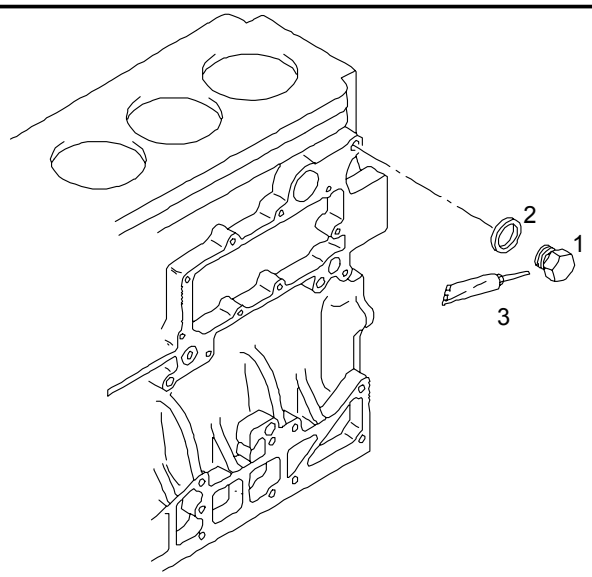

Pos	Part No.	Description	Pat	ME	All	Stk
1	51.90310-0155	drain plug M16X15-9SMNPB28K		0		1
2	06.56631-0107	seal with elastomer lip 16,7X24X1,5-ST/FPM1-80		0		1
3	04.10160-9189	sealants 5 L canister		A		NB

17.12.2003	Type V48 00	Pet	Chassis No.	Group 192-0	Figure 19 8053
17:06	Table lifting eye on exhaust elbow		Reference No. 51.#0410-0513 00.00 - 00.00 engine mounting without engine support D2866 LOH27-35 D2876 LOH02		
Seite: 001					

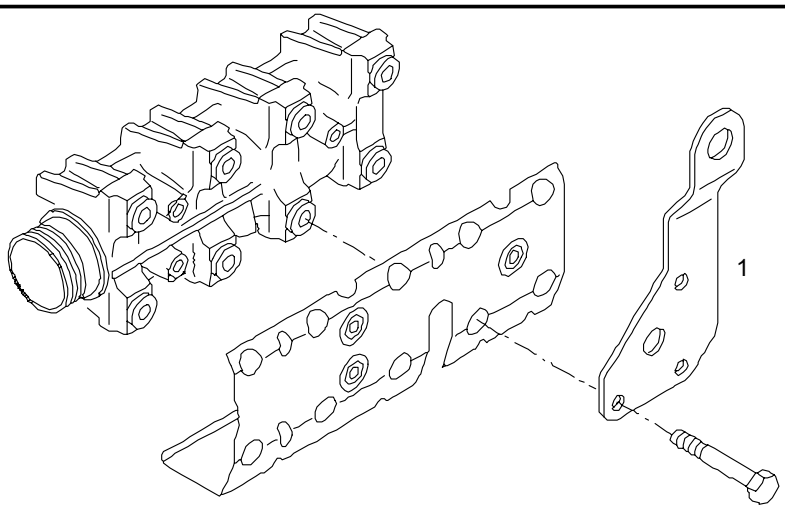

Pos	Part No.	Description	Pat	ME	All	Stk
1	51.19202-0175	lifting eye		0		1
		mounting see group 080/0:				*
		exhaust elbow and cover plates				*

17.12.2003	Type V48 00	Pet	Chassis No.	Group 192-0	Figure 01 8309
17:06	Table lifting eye on timing case		Reference No. 51.#0410-0513 00.00 - 00.00 engine mounting without engine support D2866 LOH27-35 D2876 LOH02		
Seite: 001					

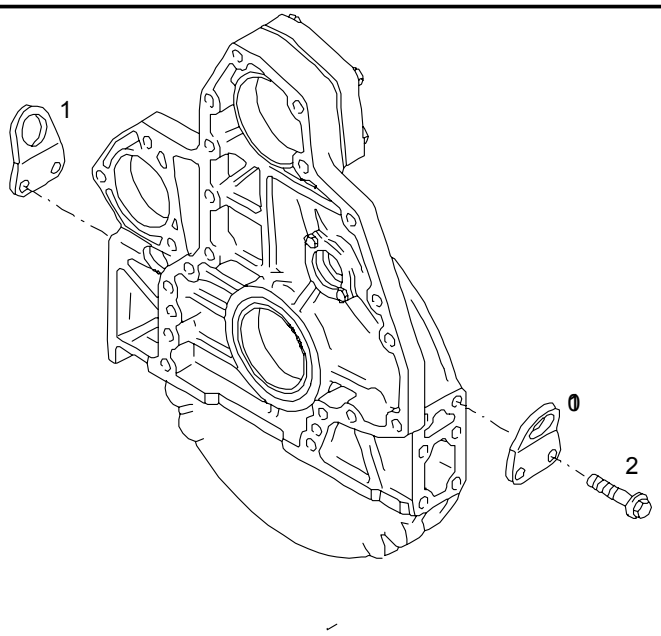

Pos	Part No.	Description	Pat	ME	All	Stk
1	51.19202-0099	lifting eye		0		1
2	06.01283-5518	hex bolt M16X35-8.8-MAN183-B1		0		2

17.12.2003	Type V48 00	Pet	Chassis No.	Group 192-0	Figure 19 8052
17:07	Table lifting eye rear		Reference No. 51.#0410-0513 00.00 - 00.00 engine mounting without engine support D2866 LOH27-35 D2876 LOH02		
Seite: 001					

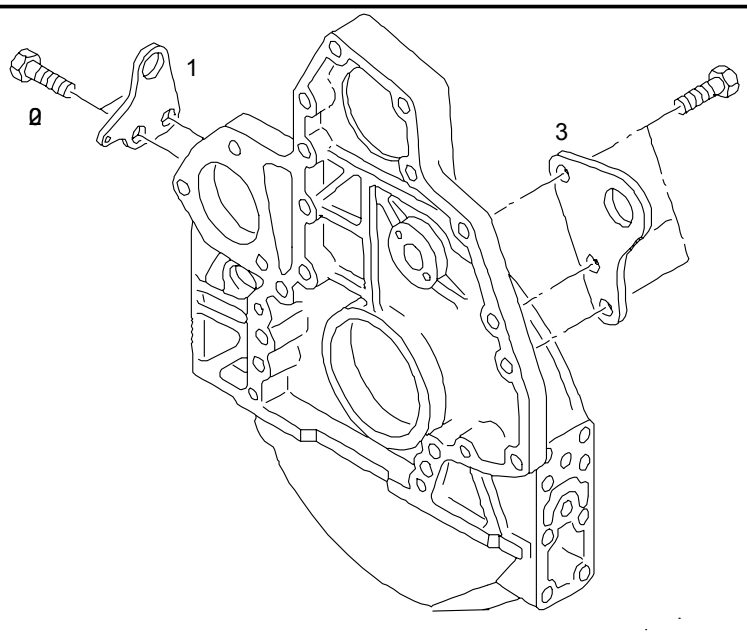

Pos	Part No.	Description	Pat	ME	All	Stk
3	51.19202-0185	lifting eye		0		1
	06.01283-5518	hex bolt M16X35-8.8-MAN183-B1		0		3

17.12.2003	Type V48 00	Pet	Chassis No.	Group 250-0	Figure 25 8114
17:08	Table bracket for loom		Reference No. 51.#0630-0161 00.00 - 00.00 loom for MS5.5-EDC - governor LG. 2000MM		
Seite: 001					

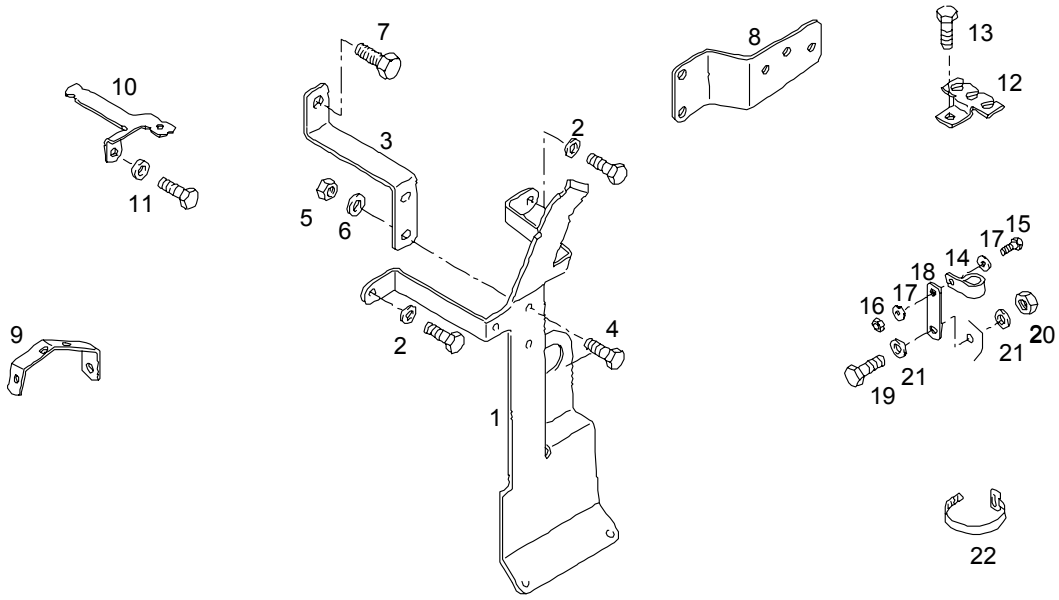

Pos	Part No.	Description	Pat	ME	All	Stk
1	81.25441-0751	bracket on engine		0		1
2	06.15013-0411	washer A8,4X16X1,6-200HV-MAN183-B1		0		2
3	81.25441-0752	bracket on engine		0		1
4	06.01283-5112	hex bolt M8X18-8.8-MAN183-B1		0		2
5	06.11064-2114	hexagon nut M8-8-MAN183-B1		0		2
6	06.15013-0411	washer A8,4X16X1,6-200HV-MAN183-B1		0		2
7	06.01289-0111	hex bolt M12X16-8.8-MAN183-A3C		0		1
8	51.25441-0161	bracket loom		0		1

17.12.2003	Type V48 00	Pet	Chassis No.	Group 250-0	Figure 25 8114
17:08	Table bracket for loom		Reference No. 51.#0630-0161 00.00 - 00.00 loom for MS5.5-EDC - governor LG. 2000MM		
Seite: 002					

Pos	Part No.	Description	Pat	ME	All	Stk
9	51.25441-0186	bracket loom		0		1
10	51.25441-0192	bracket for loom		0		1
11	51.90710-0080	washer 9X19X4-9SMNPB28K		0		1
12	81.25441-0571	line clip		0		4
13	06.01303-3111	hex bolt M8X16SK-8.8-MAN183-A2C		0		4
14	06.67840-0115	mounting clamp A20		0		1
15	06.01283-4913	hex bolt M6X20-8.8-MAN183-B1		0		1
16	06.11064-2112	hexagon nut M6-8-MAN183-B1		0		1
17	06.15013-0409	washer A6,4X12X1,6-200HV-MAN183-B1		0		2
18	51.97480-0650	fish plate 2 holes G20X3X85-10-65-9/7-ST37-2		0		1
19	06.01283-5114	hex bolt M8X22-8.8-MAN183-B1		0		1
20	06.11064-2114	hexagon nut M8-8-MAN183-B1		0		1
21	06.15013-0411	washer A8,4X16X1,6-200HV-MAN183-B1		0		2
22	81.97401-0589	cable binder 4,6X385-PA6.6-SW		0		16

17.12.2003	Type V48 00	Pet	Chassis No.	Group 250-0	Figure 25 8068
17:09	Table loom		Reference No. 51.#0630-0161 00.00 - 00.00 loom for MS5.5-EDC - governor LG. 2000MM		
Seite: 001					

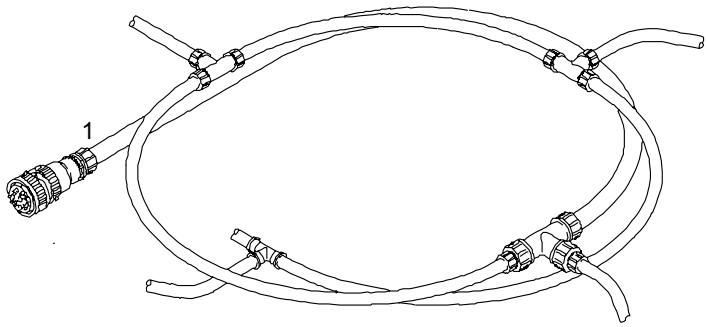

Pos	Part No.	Description	Pat	ME	All	Stk
1	81.25429-6601	loom		0		1

17.12.2003	Type V48 00	Pet	Chassis No.	Group 260-0	Figure 26 8207
17:10	Table components for starter 51. 26201-7123/7159		Reference No. 51.#0050-0152 00.00 - 00.00 starter 24V/5,4KW normal		
Seite: 001					

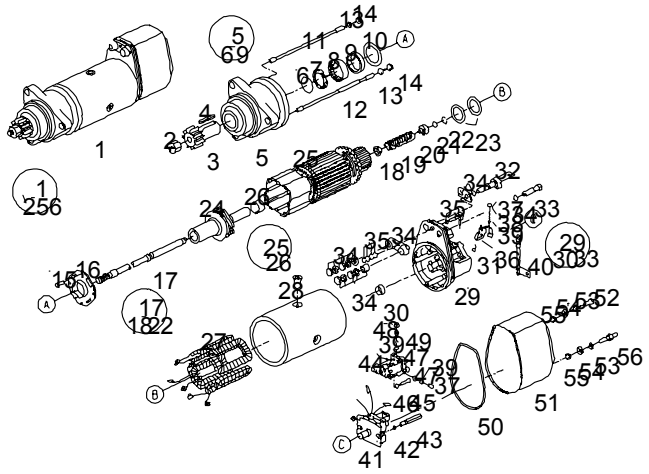

Pos	Part No.	Description	Pat	ME	All	Stk
1		see plate:				*
		starter installation with guard plate				*
2	81.90501-0141	>hex lock nut >BM10-13,8-ST-SW17-A3A		0		1
3	81.26209-0015	>starter pinion >Z=9		0		1
4	06.29100-4209	>key >A6X4X32-ST60-2K		0		1
5	81.26111-0030	>drive bearing		0		1
6	81.97601-0659	>>pressure spring		0		1
7	81.96502-0407	>>radial shaft seal >>33X45X7		0		1

17.12.2003	Type V48 00	Pet	Chassis No.	Group 260-0	Figure 26 8207
17:10	Table components for starter 51. 26201-7123/7159		Reference No. 51.#0050-0152 00.00 - 00.00 starter 24V/5,4KW normal		
Seite: 002					

Pos	Part No.	Description	Pat	ME	All	Stk
8	81.26215-6009	>>sleeve >>RH33X48X15		0		1
9	81.93020-0427	>>bush		0		1
10	81.90701-0688	>washer		0		1
11	81.90210-0026	>stud >M6X10X20X160		0		1
12	81.90210-0027	>stud >M6X10X20X210-M.I.		0		3
13	06.15013-0409	>washer >A6,4X12X1,6-200HV-MAN183-B1		0		4
14	06.11064-2112	>hexagon nut >M6-8-MAN183-B1		0		4
15	06.02849-0008	>hex lock screw >M5X14C-MK7,5-10.9-A2C		0		4
16	81.26221-0006	>bearing cap		0		1
17	81.26214-0002	>armature shaft		0		1
18	06.18879-0001	>>stop ring		0		1
19	81.97602-0320	>>pressure spring		0		1
20	81.90712-0718	>>stop ring		0		1
21	06.31630-0311	>>ball >>3G20		0		11
22	81.90820-0069	>>circlip		0		1
23	81.90701-0685	>washer >22,7X31,8X0,2-ST		0		NB
23	81.90701-0686	>washer >22,7X31,8X0,3-ST		0		NB
23	81.90701-0687	>washer >22,7X31,8X0,5-ST		0		NB
24	81.26225-6003	>clutch shaft		0		1

17.12.2003	Type V48 00	Pet	Chassis No.	Group 260-0	Figure 26 8207
17:10	Table components for starter 51. 26201-7123/7159		Reference No. 51.#0050-0152 00.00 - 00.00 starter 24V/5,4KW normal		
Seite: 003					

Pos	Part No.	Description	Pat	ME	All	Stk
25	81.26203-6018	>armature >assembly		0		1
26	81.93401-0013	>>needle sleeve >>HK1816		0		1
27	81.26204-0032	>exciter winding		0		1
28	81.90040-0043	>countersunk screw >with internal torx >M10X18-8.8-T50		0		4
29	81.26207-6026	>commutator end shield		0		1
30	81.93020-0428	>>bush		0		1
31	81.97601-0601	>>pressure spring		0		4
32	51.26220-0001	>>bar		0		1
33	81.90490-0013	>>hex shoulder stud >>M10X50X30-8.8-SW17-A3J		0		1
34	51.26232-6003	>parts kit >connector >30,31		S		1
35	51.26232-6004	>parts kit >connector >50		S		1
36	81.25921-6058	>carbon brush >set >AB FERTIGUNGSDATUM 563		S		1
37	81.90030-0045	>cylinder screw >M5X10SD-A2B		0		3
38	81.90030-0057	>cylinder screw >M5X14SD-A2B		0		4
39	06.16739-0010	>spring washer >A5-MAN183-B1		0		4
40	81.25400-6786	>power cable >starter		0		1
41	81.26212-0012	>solenoid switch		0		1

17.12.2003	Type V48 00	Pet	Chassis No.	Group 260-0	Figure 26 8207
17:10	Table components for starter 51. 26201-7123/7159		Reference No. 51.#0050-0152 00.00 - 00.00 starter 24V/5,4KW normal		
Seite: 004					

Pos	Part No.	Description	Pat	ME	All	Stk
42	81.90711-0480	>washer		0		2
43	81.90201-0092	>threaded pin		0		2
44	81.26212-0011	>solenoid switch		0		1
45	06.01284-3111	>hex bolt >M8X16-10.9-MAN183-A2C		0		2
46	06.16739-0014	>spring washer >A8-MAN183-B1		0		2
47	06.15013-0408	>washer >A5,3X10X1-200HV-MAN183-B1		0		3
48	51.26221-0003	>insulating bush		0		1
49	81.90030-0045	>cylinder screw >M5X10SD-A2B		0		1
50	81.96501-0472	>seal >asbestos-free		0		1
51	81.26221-0008	>cap		0		1
52	06.04255-1209	>cylinder screw >M6X16-8.8-A3C		0		2
53	06.16739-0011	>spring washer >A6-MAN183-B1		0		2
54	81.97651-0026	>dished washer		0		2
55	81.26233-0002	>sealing washer		0		2
56	51.26224-0001	>threaded pin		0		1

17.12.2003	Type V48 00	Pet	Chassis No.	Group 260-0	Figure 26 8162
17:11	Table starter with guard plate		Reference No. 51.#0050-0152 00.00 - 00.00 starter 24V/5,4KW normal		
Seite: 001					

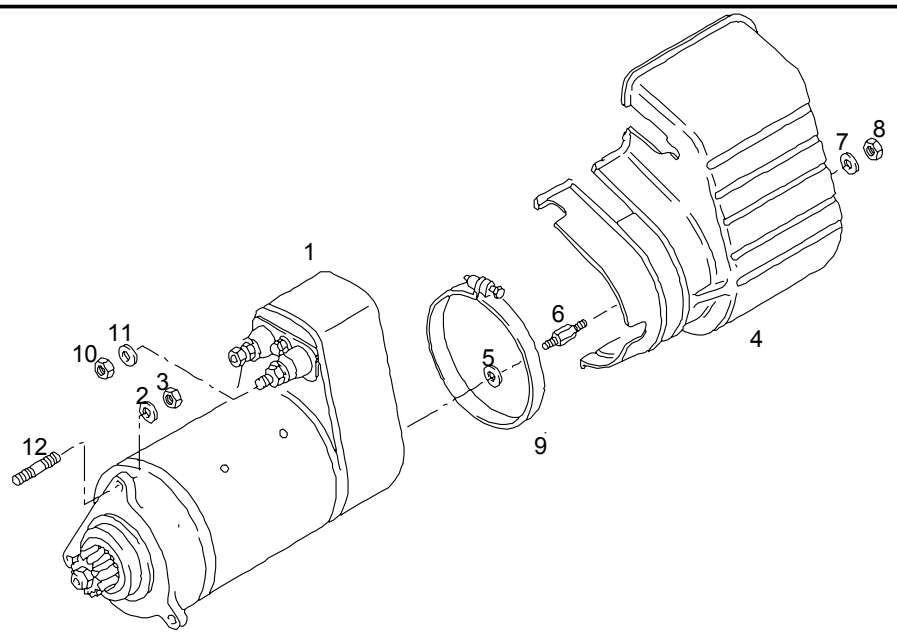

Pos	Part No.	Description	Pat	ME	All	Stk
1	51.26201-7125	starter assembly 5,4 KW	2896	0		1
		>see plate: >components for >starter >51.26201-7125	2896			*
1	51.26201-7159	starter 5,4 KW		0		1
		>see plate: >components for >starter >51.26201-7123/7159				*
2	06.16739-0013	spring washer A12-MAN183-B1	0698	0		3
3	06.11064-2316	hexagon nut M12X1,5-8-MAN183-B1		0		3

17.12.2003	Type V48 00	Pet	Chassis No.	Group 260-0	Figure 26 8162	
17:11	Table starter with guard plate			Reference No. 51.#0050-0152 00.00 - 00.00 starter 24V/5,4KW normal		
Seite: 002						

Pos	Part No.	Description	Pat	ME	All	Stk
4	51.26205-0010	guard plate for starter		0		1
5	51.90710-0218	washer 6,2X11X2-CU	2896	0		1
6	51.90441-0081	threaded pin	2896	0		1
7	06.15013-0409	washer A6,4X12X1,6-200HV-MAN183-B1		0		2
8	06.11064-2112	hexagon nut M6-8-MAN183-B1		0		1
9	51.97445-0028	clip A-125X15-W1-2		0		1
10	06.11185-0115	hexagon nut M10-8-A3C		0		1
11	06.15013-0412	washer A10,5X20X2-200HV-MAN183-B1		0		2
12	06.06145-0308	stud M12-M12X1,5X30-8.8		0		3

17.12.2003	Type V48 00	Pet	Chassis No.	Group 270-0	Figure 27 8054
17:12	Table oil pressure sender on oil filter		Reference No. 51.#0600-0310 00.00 - 00.00 engine - monitoring with/for EDC + exhaust gas recirculation D2866/76 LOH..LUH..		
Seite: 001					

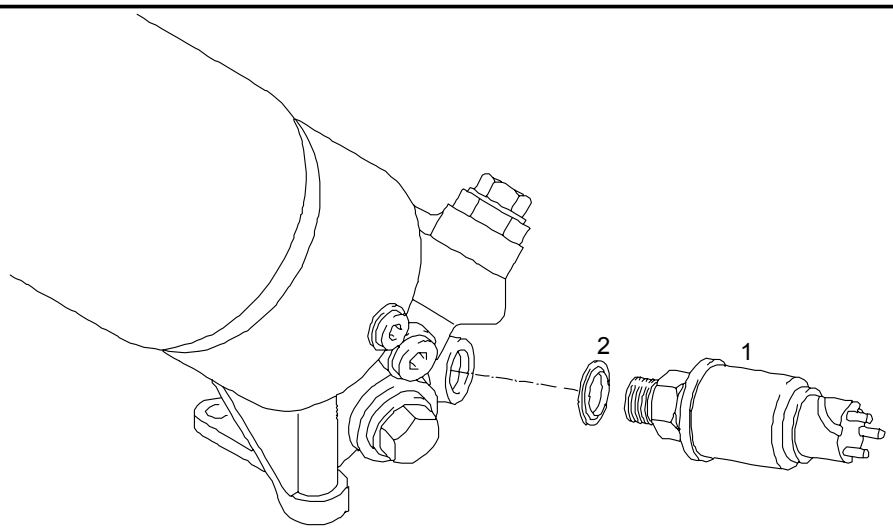

Pos	Part No.	Description	Pat	ME	All	Stk
1	81.27421-0109	pressure sensor 0-5 BAR		0		1
2	06.56190-0713	seal A18X24-CU	1400	0		1
2	06.56631-0109	seal with elastomer lip 18,7X26X1,5-ST/FPM1-80		0		1

17.12.2003	Type V48 00	Pet	Chassis No.	Group 270-0	Figure 27 8049
17:14	Table pressure sensor on intercooler elbow		Reference No. 51.#0600-0310 00.00 - 00.00 engine - monitoring with/for EDC + exhaust gas recirculation D2866/76 LOH..LUH..		
Seite: 001					

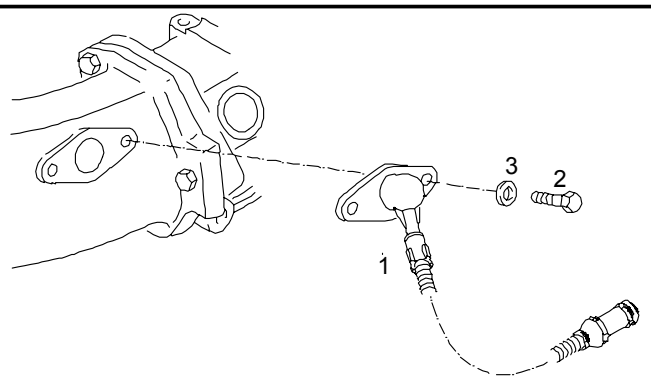

Pos	Part No.	Description	Pat	ME	All	Stk
1	51.27421-0181	charging-pressure sensor		0		1
2	06.01283-4913	hex bolt M6X20-8.8-MAN183-B1	3200	0		2
2	06.06135-8502	stud M6X16-8.8-A2C		0		2
3	06.15013-0409	washer A6,4X12X1,6-200HV-MAN183-B1	3200	0		2
3	51.90710-0332	washer 6,3X10,8X6-9SMNPB28K		0		2
3	06.11064-2112	hexagon nut M6-8-MAN183-B1		0		2

17.12.2003	Type V48 00	Pet	Chassis No.	Group 270-0	Figure 27 8055
17:15	Table speed sender		Reference No. 51.#0600-0310 00.00 - 00.00 engine - monitoring with/for EDC + exhaust gas recirculation D2866/76 LOH..LUH..		
Seite: 001					

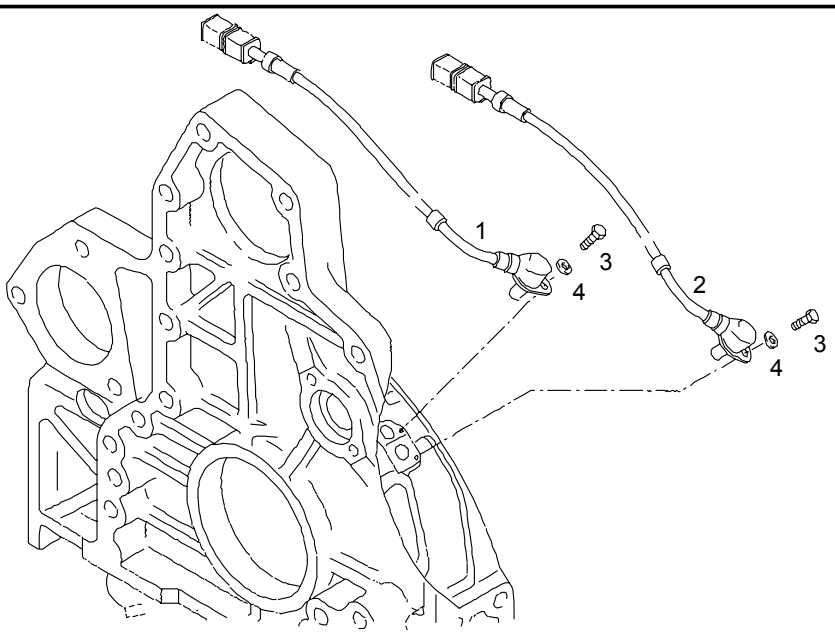

Pos	Part No.	Description	Pat	ME	All	Stk
1	51.27120-0014	speed sender		0		1
2	51.27120-0015	speed sender		0		1
3	06.01283-4911	hex bolt M6X16-8.8-MAN183-B1		0		2
4	06.15013-0409	washer A6,4X12X1,6-200HV-MAN183-B1		0		2

17.12.2003	Type V48 00	Pet	Chassis No.	Group 270-0	Figure 27 8007
17:16	Table temperature sender in coolant elbow heater feed circuit		Reference No. 51.#0600-0310 00.00 - 00.00 engine - monitoring with/for EDC + exhaust gas recirculation D2866/76 LOH..LUH..		
Seite: 001					

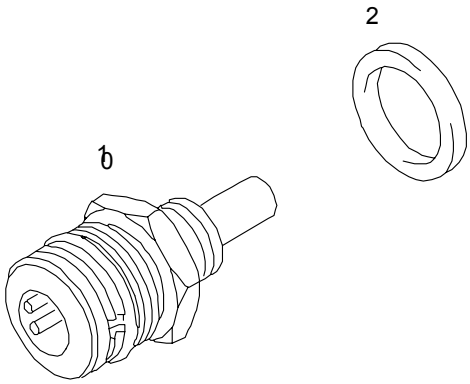

Pos	Part No.	Description	Pat	ME	All	Stk
1	51.27421-0172	temperature sensor	0601	0		1
1	51.27421-0190	temperature sensor		0		1
2	06.56190-0709	seal A16X22-CU	1400	0		1
2	06.56631-0107	seal with elastomer lip 16,7X24X1,5-ST/FPM1-80		0		1

17.12.2003	Type V48 00	Pet	Chassis No.	Group 270-0	Figure 27 8007
17:16	Table temperature sender in of injection pump		Reference No. 51.#0600-0310 00.00 - 00.00 engine - monitoring with/for EDC + exhaust gas recirculation D2866/76 LOH..LUH..		
Seite: 001					

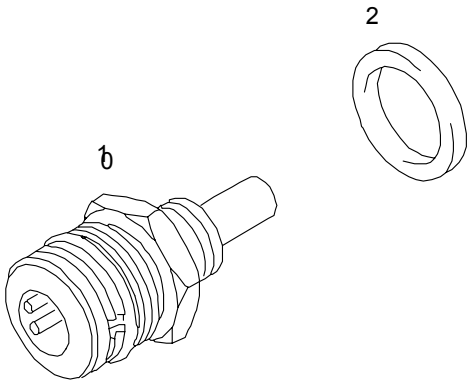

Pos	Part No.	Description	Pat	ME	All	Stk
1	51.27421-0172	temperature sensor		0		1
2	06.56631-0107	seal with elastomer lip 16,7X24X1,5-ST/FPM1-80		0		1

17.12.2003	Type V48 00	Pet	Chassis No.	Group 270-0	Figure 27 8028
17:18	Table temperature sender with warning contact			Reference No. 51.#0600-0310 00.00 - 00.00 engine - monitoring with/for EDC + exhaust gas recirculation D2866/76 LOH..LUH..	
Seite: 001					

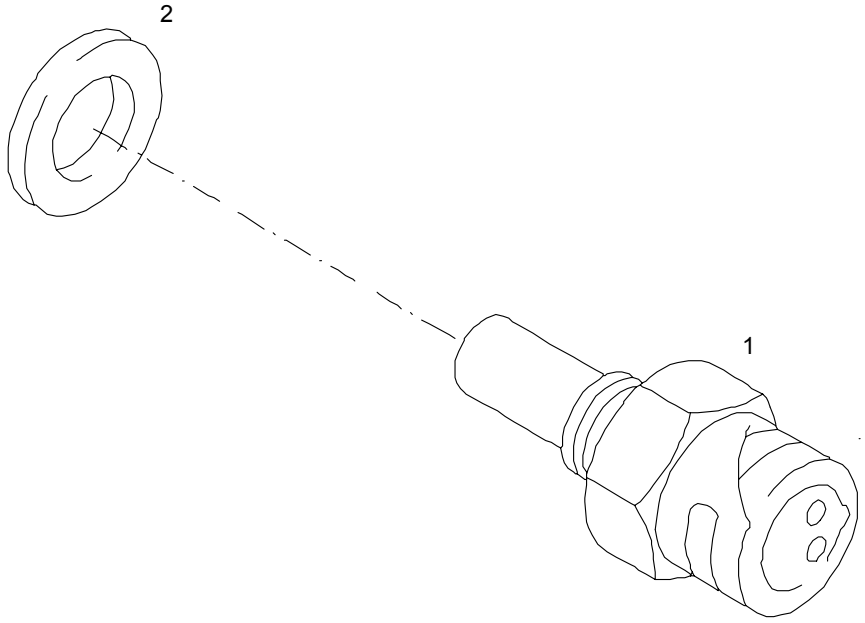

Pos	Part No.	Description	Pat	ME	All	Stk
1	81.27421-0125	temperature sender bayonet lock 100 GRAD	0801	0		1
1	51.27421-0151	temperature sender 106C+3K BEI 15K/MIN		0		1
2	06.56190-0705	seal A14X18-CU	1400	0		1
2	06.56631-0106	seal with elastomer lip 14,7X22X1,5-ST/FPM1-80		0		1

17.12.2003	Type V48 00	Pet	Chassis No.	Group 270-0	Figure 27 8028
17:18	Table temperature sensor for charge air system		Reference No. 51.#0600-0310 00.00 - 00.00 engine - monitoring with/for EDC + exhaust gas recirculation D2866/76 LOH..LUH..		
Seite: 001					

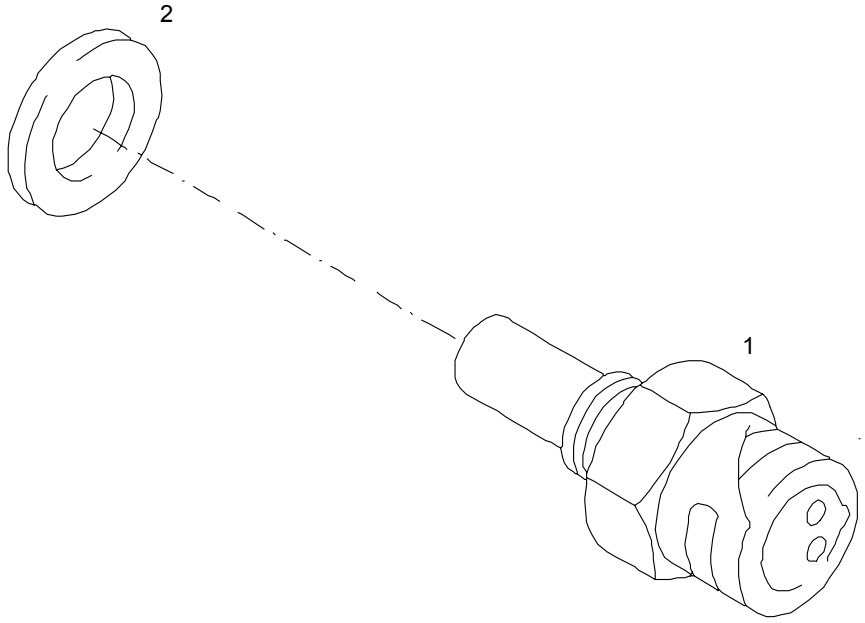

Pos	Part No.	Description	Pat	ME	All	Stk
1	51.27421-0165	temperature sender		0		1
2	06.56190-0709	seal A16X22-CU	1400	0		1
2	06.56631-0107	seal with elastomer lip 16,7X24X1,5-ST/FPM1-80		0		1

17.12.2003	Type V48 00	Pet	Chassis No.	Group 470-0	Figure 47 8001
17:20	Table steering booster pump		Reference No. 51.#0290-0199 00.00 - 00.00 steering booster pump 21.0CM3 150BAR D2865/66/76 LOH..		
Seite: 001					

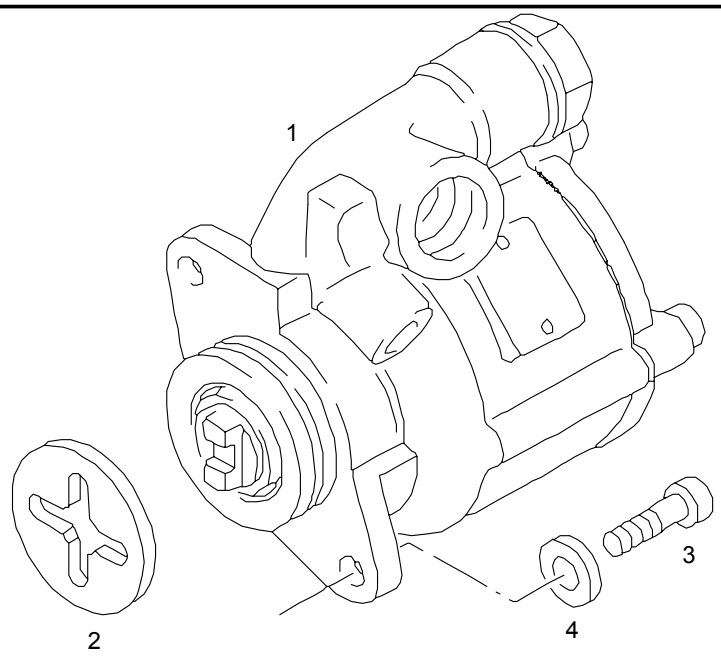

Pos	Part No.	Description	Pat	ME	All	Stk
1	81.47101-6137	vane type pump aluminium ZF/21CCM right-handed		0		1
		>see plate: >repair kits >for				*
		>vane type pump >-6132/37/54/55/63/67/78/82-84				*
2	51.47104-0024	driving dog for hydraulic pump		0		1
3	06.02099-0167	cylinder screw M10X35-8.8-A3C		0		2
4	06.15013-0412	washer A10,5X20X2-200HV-MAN183-B1		0		NB

17.12.2003	Type V48 00	Pet	Chassis No.	Group 470-0	Figure 46 0465
17:20	Table vane type pump repair kits -6132/37/54/55/63/67/78/82-84		Reference No. 51.#0290-0199 00.00 - 00.00 steering booster pump 21.0CM3 150BAR D2865/66/76 LOH..		
Seite: 001					

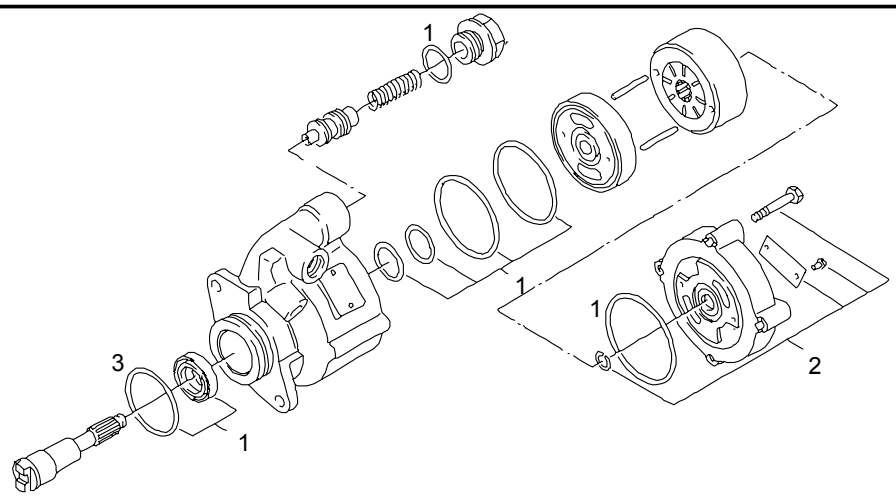

Pos	Part No.	Description	Pat	ME	All	Stk
1	81.47101-6220	>set of seals >asbestos-free		S		1
2	81.47101-6150	>small parts kits >asbestos-free		S		1
3	06.56930-2107	>toric seal >46X3N-NBR3-70		0		1

17.12.2003	Type V48 00	Pet	Chassis No.	Group 540-0	Figure 54 8056
17:21	Table 2-cyl.in-line air compressor vertical			Reference No. 51.#0060-0360 00.00 - 00.00 2-cyl.in-line air compressor 600CM3 D2866/76 LOH..LUH..	
Seite: 001					

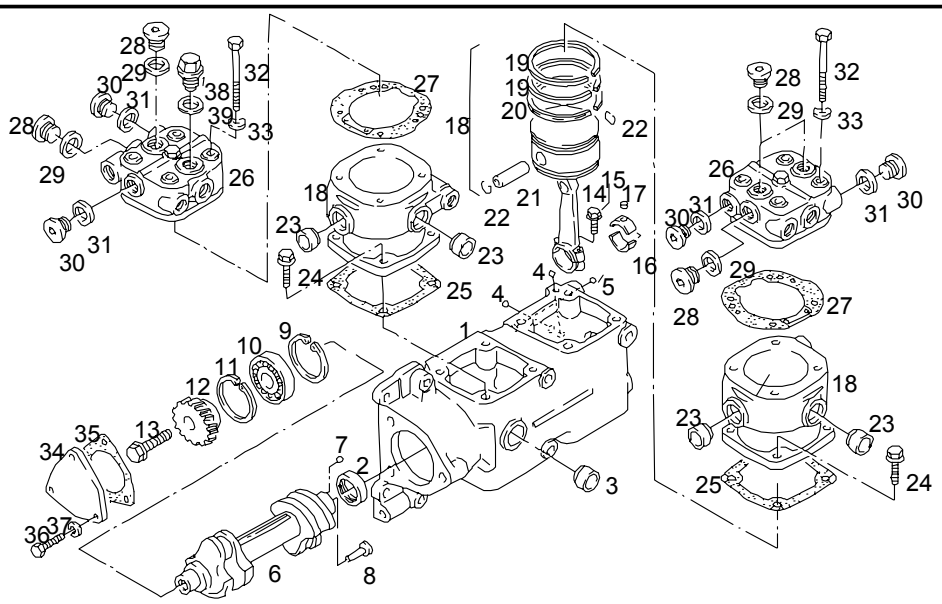

Pos	Part No.	Description	Pat	ME	All	Stk
	51.54000-7079	air compressor 2-cylinder range		0		1
1	51.54112-6020	>air compressor housing >water cooled		0		1
	04.10394-9292	>>sealants >>50 ML >>cartridge with nozzle		M		NB
2	51.93020-0335	>>bush		0		1
3	06.15090-4531	>>cover >>B52/16-ST-A4C		0		1
	04.10160-9164	>>>adhesive >>>50 ML >>>bottle		H		NB
4	06.31639-0002	>>ball >>8,5G20P2		0		2

17.12.2003	Type V48 00	Pet	Chassis No.	Group 540-0	Figure 54 8056
17:21	Table 2-cyl.in-line air compressor vertical			Reference No. 51.#0060-0360 00.00 - 00.00 2-cyl.in-line air compressor 600CM3 D2866/76 LOH..LUH..	
Seite: 002					

Pos	Part No.	Description	Pat	ME	All	Stk
5	06.31639-0002	>>ball >>8,5G20P2		0		1
6	51.54113-5014	>crankshaft >assembly	2996	0		1
6	51.54113-5025	>crankshaft >for air compressor		0		1
7	06.21641-0603	>>plug >>G5		0		1
8	06.22220-0708	>>spiral dowel pin >>3X16-ST		0		1
9	51.90815-0022	>circlip >85X3,00W		0		1
10	51.93420-0015	>roller bearing		0		1
11	06.29020-0206	>circlip >85X3,00-ZNPHR5F		0		1
12	51.54210-0138	>drive gear		0		1
13	06.02202-0861	>hex collar bolt >M18X1,5X65SK		0		1
14	51.54106-6013	>connecting rod >assembly >with bearing		0		2
15	51.90020-0181	>>hex collar bolt >>M8X38-10.9		0		4
16	81.54121-6001	>>conrod bearing >>assembly >>32,00 MM		P		2
17	06.22180-0502	>>pin >>4X5		0		2
18	51.54105-6008	>repair kit >cylinder liner with piston		0		2
19	06.18480-0232	>>oil scraper ring >>90/82,4X2,5		0		4

17.12.2003	Type V48 00	Pet	Chassis No.	Group 540-0	Figure 54 8056
17:21	Table 2-cyl.in-line air compressor vertical		Reference No. 51.#0060-0360 00.00 - 00.00 2-cyl.in-line air compressor 600CM3 D2866/76 LOH..LUH..		
Seite: 003					

Pos	Part No.	Description	Pat	ME	All	Stk
20	51.02503-0562	>>bevelled oil scraper ring >>with spring expander		0		2
21	06.21190-2721	>>piston pin >>D20X13X60-K112		0		2
22	06.29180-0105	>>circlip >>A20-FDST		0		4
23	51.91606-0040	>>cover >>A25,2/8-X5CRNI1810N		0		8
	04.10160-9164	>>>adhesive >>>50 ML >>>bottle		H		NB
24	06.02813-4311	>>hex lock screw >>M8X30-10.9-MAN183-B1		0		8
25	51.54901-0028	>gasket >asbestos-free		0		2
26	51.54114-6054	>compressor cylinder head		0		2
		>>see plate: >>components for >>air compressor				*
		>>cylinder head >>51.54114-6045/6048/6053/6054				*
27	51.54901-0027	>gasket >asbestos-free		0		2
28	06.08042-0609	>drain plug >M26X1,5-ST-A3C		0		5
29	06.56190-0726	>seal >A26X31-CU		0		5
30	06.08042-0607	>drain plug >M22X1,5-ST-A3C		0		4
31	06.56190-0718	>seal >A22X27-CU		0		4
32	06.01014-9121	>hex shoulder stud >M8X80-10.9-MAN183-PHR		0		8

17.12.2003	Type V48 00	Pet	Chassis No.	Group 540-0	Figure 54 8056
17:21	Table 2-cyl.in-line air compressor vertical			Reference No. 51.#0060-0360 00.00 - 00.00 2-cyl.in-line air compressor 600CM3 D2866/76 LOH..LUH..	
Seite: 004					

Pos	Part No.	Description	Pat	ME	All	Stk
33	06.15013-0411	>washer >A8,4X16X1,6-200HV-MAN183-B1		0		8
34	51.54111-0015	>cover		0		1
35	51.08902-0151	>gasket >asbestos-free	3493	0		1
35	04.10394-9256	>sealing compound >TEROSTAT-63-310ML-RTBR >cartridge with nozzle	2600	M		NB
35	04.10394-9272	>sealants >300 ML - >cartridge with nozzle		M		NB
36	06.01283-5114	>hex bolt >M8X22-8.8-MAN183-B1		0		3
37	06.15013-0411	>washer >A8,4X16X1,6-200HV-MAN183-B1		0		3
38	51.54122-0007	>safety valve >for air compressor >17 BAR		0		1
		>for >connecting parts >engine end				*
39	06.56190-0726	>seal >A26X31-CU		0		1
	06.56333-3256	>toric seal >24,2X3B-FPM1-70-GN		0		2
	06.71250-2705	>straight union >LL16N-M26X1,5-ST-A4C		0		2

17.12.2003	Type V48 00	Pet	Chassis No.	Group 540-0	Figure 54 8112
17:22	Table components for air compressor cylinder head 51. 54114-6045/6048/6053/6054			Reference No. 51.#0060-0360 00.00 - 00.00 2-cyl.in-line air compressor 600CM3 D2866/76 LOH..LUH..	
Seite: 001					

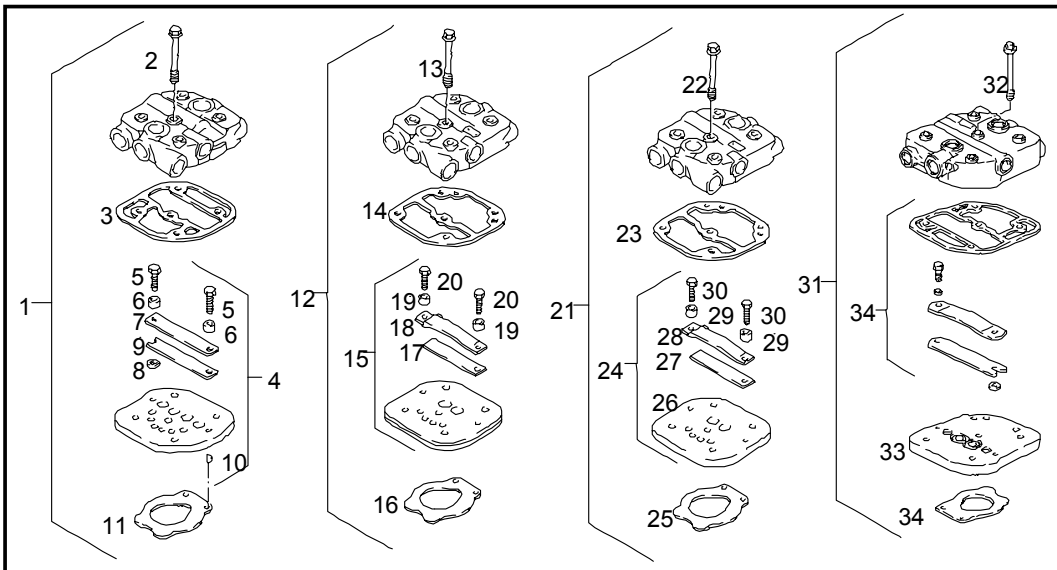

Pos	Part No.	Description	Pat	ME	All	Stk
1		>cylinder head >51.54114-6045 >make: >WESTINGHOUSE				2
2	81.90405-0208	>>hex collar bolt >>M8X60-10.9-A2C		0		2
3	81.54901-0102	>>gasket >>asbestos-free		0		2
4	81.54124-6013	>>disc valve >>assembly		0		2
5	06.01284-2913	>>>hex bolt >>>M6X20-10.9-A2C		0		4
6	81.91730-0065	>>>spacer sleeve		0		4
7	81.54117-0008	>>>pressure absorber		0		2
8		>>>no spare part				*

17.12.2003	Type V48 00	Pet	Chassis No.	Group 540-0	Figure 54 8112
17:22	Table components for air compressor cylinder head 51. 54114-6045/6048/6053/6054		Reference No. 51.#0060-0360 00.00 - 00.00 2-cyl.in-line air compressor 600CM3 D2866/76 LOH..LUH..		
Seite: 002					

Pos	Part No.	Description	Pat	ME	All	Stk
9	81.54115-0005	>>>delivery disc		0		2
10	06.22220-0704	>>>spiral dowel pin >>>3X8-ST		0		4
11	81.54116-0002	>>suction disc		0		2
12		>cylinder head >51.54114-6048 >make: >KNORR				2
13	81.90405-0208	>>hex collar bolt >>M8X60-10.9-A2C		0		2
14	81.54901-0089	>>gasket >>asbestos-free		0		2
15	81.54124-6019	>>repair kit >>disc valve >>asbestos-free		S		2
16	81.54116-0002	>>>suction disc		0		2
17	81.54115-0009	>>>delivery disc		0		2
18	81.54117-0004	>>>pressure absorber		0		2
19	81.91730-0070	>>>spacer sleeve		0		4
20	06.01304-6915	>>>hex bolt >>>M6X25SK-10.9-MAN183-PHR		0		4
21		>cylinder head >51.54114-6054 >make: >KNORR				2
22	81.90405-0208	>>hex collar bolt >>M8X60-10.9-A2C		0		2
23	81.54901-0089	>>gasket >>asbestos-free		0		2
24	81.54124-6019	>>repair kit >>disc valve >>asbestos-free		S		2

17.12.2003	Type V48 00	Pet	Chassis No.	Group 540-0	Figure 54 8112	
17:22	Table components for air compressor cylinder head 51. 54114-6045/6048/6053/6054			Reference No. 51.#0060-0360 00.00 - 00.00 2-cyl.in-line air compressor 600CM3 D2866/76 LOH..LUH..		
Seite: 003						

Pos	Part No.	Description	Pat	ME	All	Stk
25	81.54116-0002	>>>suction disc		0		2
26	81.54118-0010	>>>valve plate		0		2
27	81.54115-0009	>>>delivery disc		0		2
28	81.54117-0009	>>>pressure absorber		0		2
29	81.91730-0070	>>>spacer sleeve		0		4
30	06.01304-6915	>>>hex bolt >>>M6X25SK-10.9-MAN183-PHR		0		4
31		>cylinder head >51.54114-6053 >make: >BOSCH				2
32	81.90405-0182	>>hex collar bolt >>M8X60X16-10.9-SW13-A3C		0		2
33	81.54118-0014	>>intermediate plate		0		2
34	81.54124-6023	>>parts kit >>disc valve		S		2

17.12.2003	Type V48 00	Pet	Chassis No.	Group 540-0	Figure 54 8401
17:24	Table lines for 2-cyl.in-line air compressor		Reference No. 51.#0250-0268 00.00 - 00.00 connecting parts for 2-cyl.in-line air compressor D2866 LOH27-34 D2876 LOH02/03		
Seite: 001					

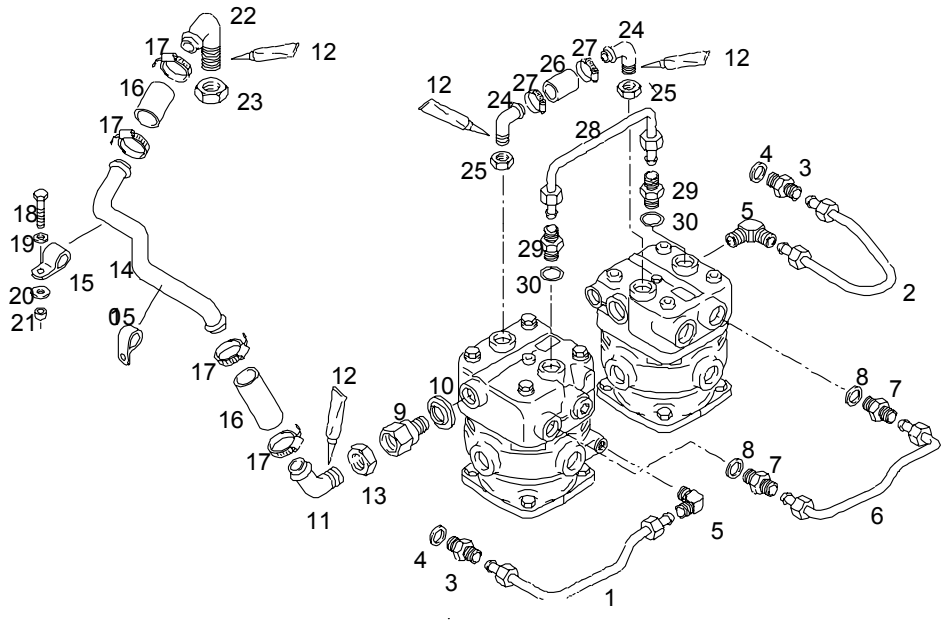

Pos	Part No.	Description	Pat	ME	All	Stk
1	51.06302-5737	coolant pipe assembly industrial engine		0		1
2	51.06302-5716	coolant pipe assembly industrial engine		0		1
3	06.71060-2103	straight union L10A-M-ST-A4C		0		2
4	06.56190-0706	seal A14X20-CU	1400	0		2
4	06.56631-0106	seal with elastomer lip 14,7X22X1,5-ST/FPM1-80		0		2
5	06.71080-2107	elbow union L10M-ST-A4C		0		2

17.12.2003	Type V48 00	Pet	Chassis No.	Group 540-0	Figure 54 8401
17:24	Table lines for 2-cyl.in-line air compressor		Reference No. 51.#0250-0268 00.00 - 00.00 connecting parts for 2-cyl.in-line air compressor D2866 LOH27-34 D2876 LOH02/03		
Seite: 002					

Pos	Part No.	Description	Pat	ME	All	Stk
6	51.06302-5736	coolant pipe assembly industrial engine		0		1
7	51.98130-0192	threaded union		0		2
8	06.56190-0718	seal A22X27-CU	1400	0		2
8	06.56631-0110	seal with elastomer lip 22,7X30X2-ST/FPM1-80		0		2
9	51.98130-0434	threaded union M26X1,5-M32X1-9SMNPB28K-FE/ZN8		0		1
10	06.56631-0126	seal with elastomer lip 32,7X40X2,0-ST/FPM1-80		0		2
11	51.54120-0378	intake manifold		0		1
12	04.10160-9029	sealants 350 ML can		D		NB
13	51.90501-0055	hexagon nut M32X1,5-8-9SMNPB28K-SW36		0		1
14	51.54120-5225	suction pipe		0		1
15	51.97401-0028	>clamp >B32,2X20X42-9X13-UST37-2		0		2
16	04.27199-1032	hose N1-32		1		,08
17	51.97440-0139	spring clip 44X15-CK75		0		4
18	06.01283-5117	hex bolt M8X30-8.8-MAN183-B1		0		1
19	06.15013-0411	washer A8,4X16X1,6-200HV-MAN183-B1		0		1
20	51.90710-0371	washer 8,4X19X4-C45K		0		1

17.12.2003	Type V48 00	Pet	Chassis No.	Group 540-0	Figure 54 8401
17:24	Table lines for 2-cyl.in-line air compressor		Reference No. 51.#0250-0268 00.00 - 00.00 connecting parts for 2-cyl.in-line air compressor D2866 LOH27-34 D2876 LOH02/03		
Seite: 003					

Pos	Part No.	Description	Pat	ME	All	Stk
21	51.91701-0534	bush 9X20X14-ST35NBK		0		1
22	51.54120-0379	intake manifold		0		1
23	51.90501-0055	hexagon nut M32X1,5-8-9SMNPB28K-SW36		0		1
24	51.54120-6028	intake manifold		0		2
25	06.79090-4202	>hexagon nut >M26X1,5-4D-A4C		0		2
26	04.27199-1025	hose N1-25		1		,08
27	51.97440-0141	spring clip 35X12-CK75		0		2
28	81.51225-5017	piping assembly 16X1,5 curved		0		1
29	06.71250-2705	straight union LL16N-M26X1,5-ST-A4C		0		2
30	06.56333-3256	toric seal 24,2X3B-FPM1-70-GN		0		2

17.12.2003	Type V48 00	Pet	Chassis No.	Group 540-0	Figure 54 8095
17:24	Table mounting for 2-cyl.in-line air compressor		Reference No. 51.#0060-0360 00.00 - 00.00 2-cyl.in-line air compressor 600CM3 D2866/76 LOH..LUH..		
Seite: 001					

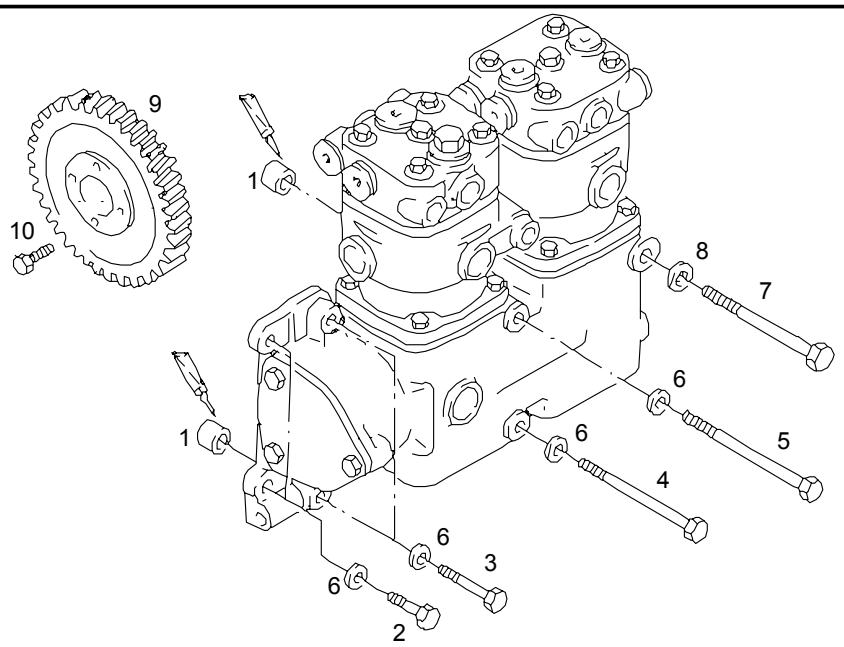

Pos	Part No.	Description	Pat	ME	All	Stk
1	51.91701-0204	bush		0		2
	04.10394-9292	>sealants >50 ML >cartridge with nozzle		M		NB
2	06.01284-7116	hex bolt M8X28-10.9-MAN183-PHR	2892	0		2
2	06.01284-7122	hex bolt M8X55-10.9-MAN183-PHR		0		2
3	06.01284-7122	hex bolt M8X55-10.9-MAN183-PHR		0		2
4	51.90001-0091	hex stud bolt M8-140X6X14-8.8-SW14		0		1
5	06.01014-9130	hex shoulder stud M8X150-10.9-MAN183-PHR		0		1
6	06.16739-0014	spring washer A8-MAN183-B1	0698	0		6

17.12.2003	Type V48 00	Pet	Chassis No.	Group 540-0	Figure 54 8095
17:24	Table mounting for 2-cyl.in-line air compressor		Reference No. 51.#0060-0360 00.00 - 00.00 2-cyl.in-line air compressor 600CM3 D2866/76 LOH..LUH..		
Seite: 002					

Pos	Part No.	Description	Pat	ME	All	Stk
7	06.01019-0141	hex shoulder stud M10X140-8.8-A3C		0		1
8	06.16739-0012	spring washer A10-MAN183-B1	0698	0		1
		item number 9 + 10 see group 40/0:				*
		drive gear for air compressor				*

02 MOTOR SOĞUTMA
ENGINE COOLING
x

02-010	Soğutma sistemi Cooling system x	TB162W	TB162Z	TB162X	TB162Y
02-011	Soğutma sistemi Cooling system x	TB163W	TB163Z	TB163X	TB163Y
02-020	Şarj havası soğutucu ve borular Intercooler and Piping x	TB162W	TB162Z	TB162X	TB162Y
02-021	Şarj havası soğutucu ve borular Intercooler and Piping x	TB163W	TB163Z	TB163X	TB163Y
02-030	Motor soğutma boru ve hortum hattı Engine cooling, pipe & hose line x	TB162W	TB162Z	TB162X	TB162Y
02-031	Motor soğutma boru ve hortum hattı Engine cooling, pipe & hose line x	TB163W	TB163Z	TB163X	TB163Y

TEMSA	Soğutma sistemi Cooling system	Group No : 02-010 Draw. Num. : x Rev. Date : Page : 1
	Vehicle Model: TB162W, TB162Z, TB162X, TB162Y	

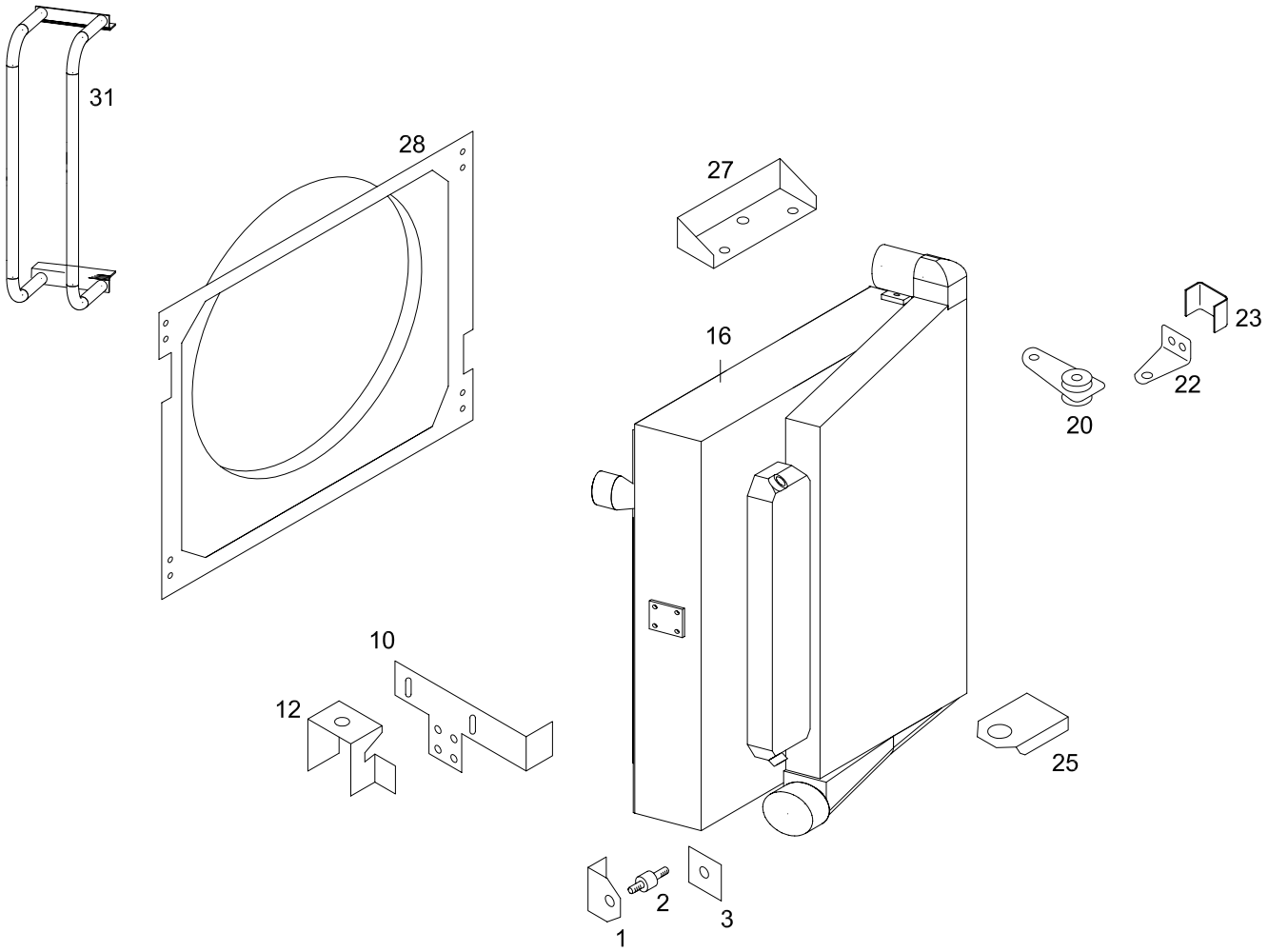

TEMSA	Soğutma sistemi Cooling system	Drw.no: 61102-90000-72 Vehicle Model: 360ps engine **TB162W, TB162Z, TB162X, TB162Y**	**02-010** RevDate: Page: 1

Pos	Part Number	Turkish	English	German	Qty	R/P	From	Up To	Original Number Supplier
1	61102-90025-01Y	MONTAJ PLAKASI	MOUNTING PLATE		1		1		
2	81.96210-0101	LASTİK TAKOZ	RUBBER PAD		1		1		MAN
3	61102-90025-03Y	MONTAJ PLAKASI	MOUNTING PLATE		1		1		
10	61102-90025-15Y	MONTAJ PLAKASI	MOUNTING PLATE		1		1		
12	81.06230-6010	MONTAJ PLAKASI	MOUNTING PLATE		1		1		MAN
16	81.06100-6425	SOĞUTMA SİSTEMİ KOMPLE	COOLING SYSTEM ASSEMBLY		1		1		MAN
20	81.06230-6011	MONTAJ PLAKASI	MOUNTING PLATE		1		1		MAN
22	61102-90025-22Y	MONTAJ PLAKASI	MOUNTING PLATE		1		1		
23	61102-90025-23Y	MONTAJ PLAKASI	MOUNTING PLATE		1		1		
25	81.06230-6012	MONTAJ PLAKASI	MOUNTING PLATE		1		1		MAN
27	61102-90000-27Y	MONTAJ PLAKASI	MOUNTING PLATE		1		1		
28	81.06620-0119	DAVLUMBAZ	AIR DUCT		1		1		MAN
31	61102-90000-31Y	TAŞIYICI	CARRIER		1		1		

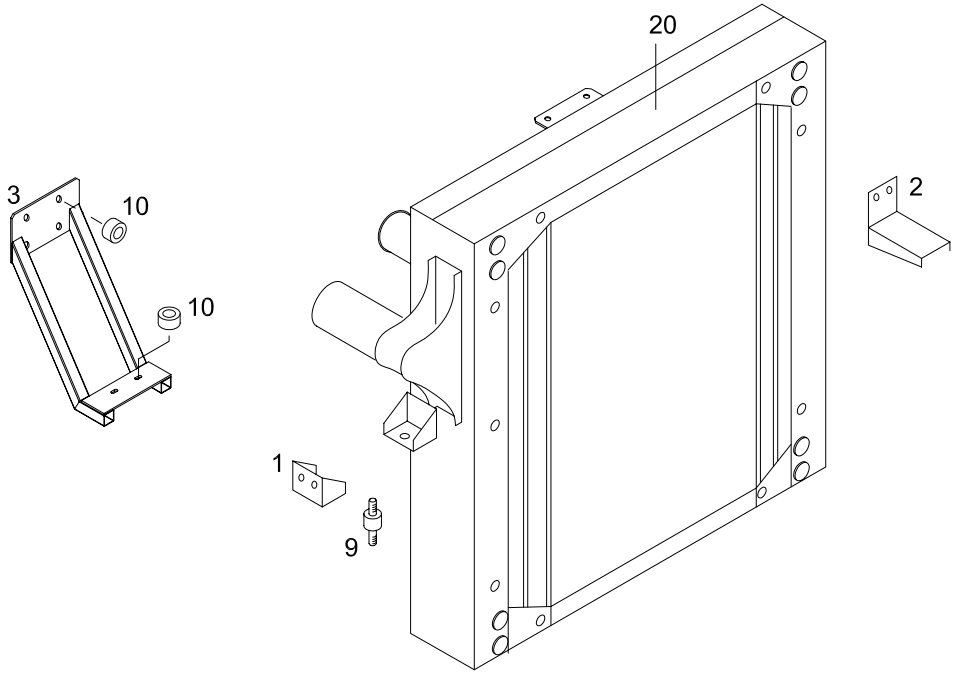
20
3
10
10
2
1
9

TEMSA	Soğutma sistemi Cooling system	Drw.no: 6110190010-72 Vehicle Model: 410ps engine TB163W, TB163Z, TB163X, TB163Y	02-011 RevDate: Page: 1

Pos	Part Number	Turkish	English	German	Qty	R/P	From	Up To	Original Number Supplier
1	61102-96010-01Y	MONTAJ PLAKASI SOL	MOUNTING PLATE LH		1		1		
2	61102-96010-02Y	MONTAJ PLAKASI SAĞ	MOUNTING PLATE RH		1		1		
3	61102-96010-03Y	MONTAJ PLAKASI ARKA	MOUNTING PLATE REAR		1		1		
9	81.96210-0042	LASTİK TAKOZ	RUBBER PAD		2		1		MAN
10	81.96210-0101	LASTİK TAKOZ	RUBBER PAD		4		1		MAN
20	81.06100-6449	SOĞUTMA SİSTEMİ KOMPLE	COOLING SYSTEM ASSEMBLY		1		1		MAN

TEMSA	Şarj havası soğutucusu ve boruları Intercooler and pipes	Group No : 02-020 Draw. Num. : x Rev. Date : Page : 1
	Vehicle Model: TB162W, TB162Z, TB162X, TB162Y	

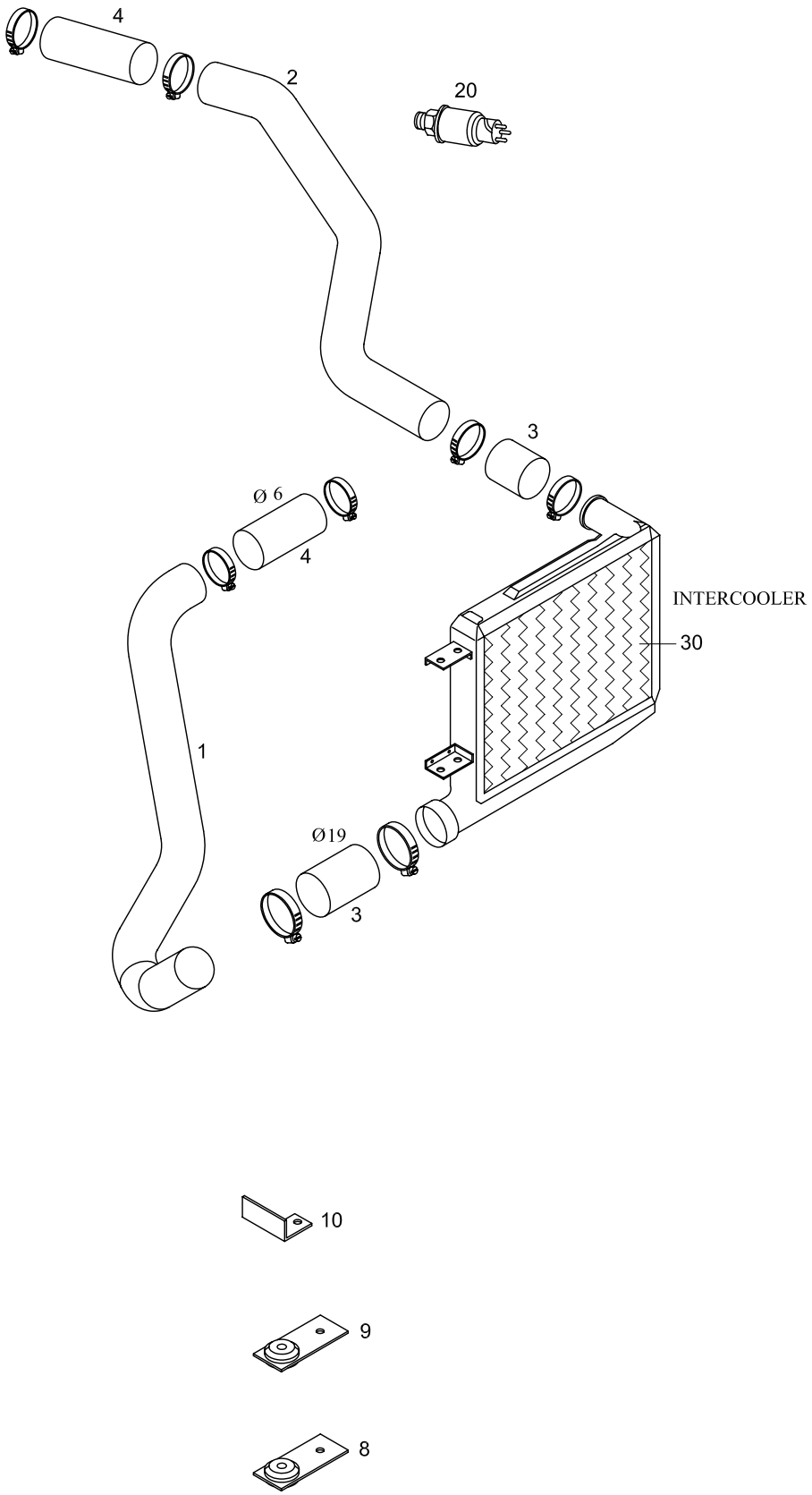

TEMSA	Şarj havası soğutucusu ve boruları Intercooler and pipes	Drw.no TC298822-900 360ps engine Vehicle Model: **TB162W, TB162Z, TB162X, TB162Y**	**02-020** RevDate: Page: 1

Pos	Part Number	Turkish	English	German	Qty	R/P	From	Up To	Original Number Supplier
1	TC298822-113Y	ŞARJ HAVASI BORUSU	PIPE INTERCOOLER		1		1		
2	TC298822-155Y	ŞARJ HAVASI BORUSU	PIPE INTERCOOLER		1		1		
3	TH166019Y	HORTUM	HOSE		1		1		D=19 MM,L=1,3 M
4	TH166006Y	HORTUM	HOSE		1		1	020904	D.6
4	TH166019Y	HORTUM	HOSE		1		020904		D=19 MM,L=1,3 M
8	MC116317Y	TUTUCU	SUSPENDER		1		1		
9	MC116316Y	TUTUCU	SUSPENDER		1		1		
10	TC298822-144Y	TUTUCU	SUSPENDER		1		1		
20	81.27421-0209	MÜŞİR	THERMOSTAT		1		1		MAN
30	81.06130-0172	ŞARJ HAVASI SOĞUTUCUSU	INTERCOOLER		1		1		MAN

TEMSA	Şarj havası soğutucusu ve boruları Intercooler and pipes	Group No : 02-021 Draw. Num. : x Rev. Date :
	Vehicle Model: TB163W, TB163Z, TB163X, TB163Y	Page : 1

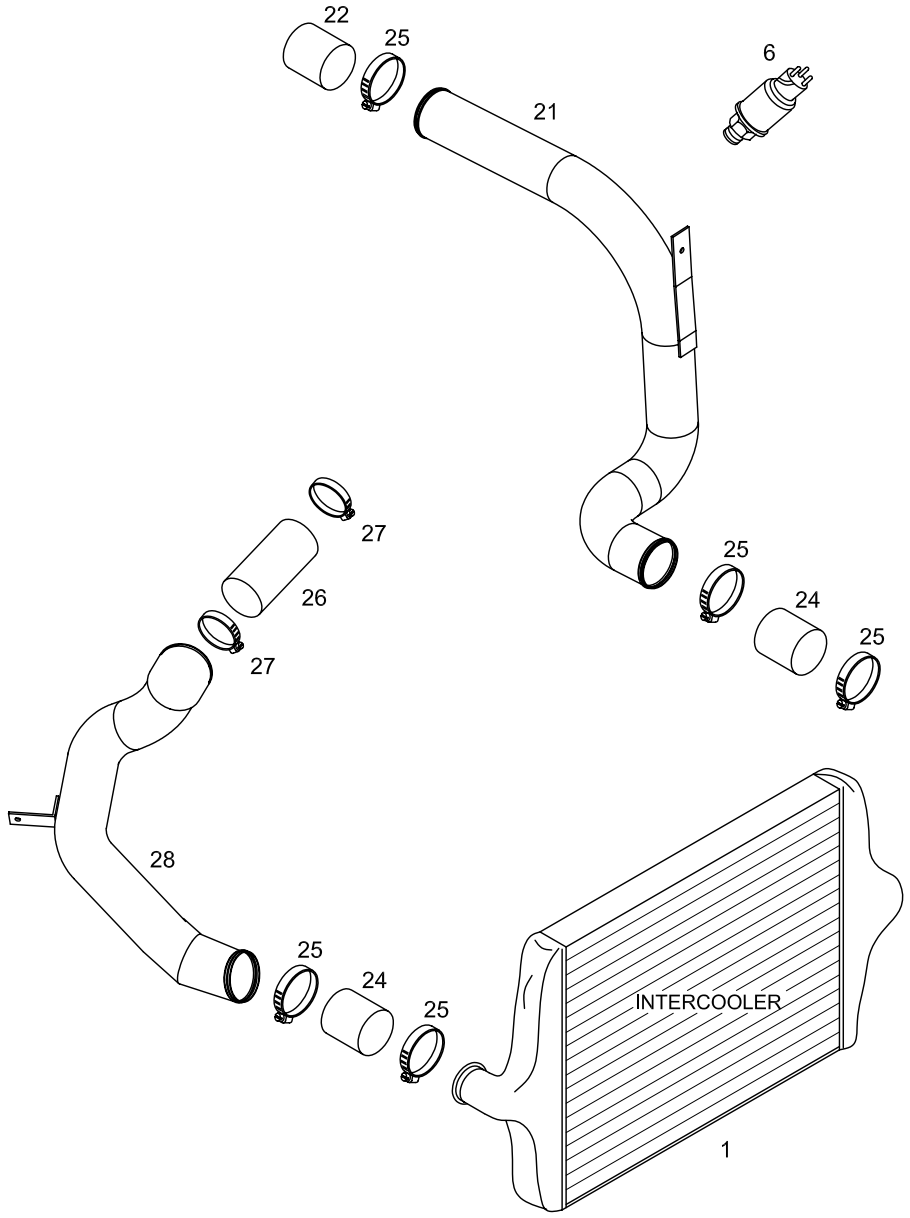

TEMSA	Şarj havası soğutucusu ve boruları Intercooler and pipes	Drw.no: 6110190010-72 Vehicle Model: 410ps engine TB163W, TB163Z, TB163X, TB163Y	02-021 RevDate: Page: 1

Pos	Part Number	Turkish	English	German	Qty	R/P	From	Up To	Original Number Supplier
1	81.06130-0184	ŞARJ HAVASI SOĞUTUCUSU	INTERCOOLER		1		1		MAN
6	81.27421-0209	SICAKLIK SENSÖRÜ	TEMP. SENSOR		1		1		MAN
21	TC298822-411Y	ŞARJ HAVASI BORUSU	PIPE INTERCOOLER		1		1		
22	51.96420-0121	HORTUM	HOSE		1		1		90 MAN
24	81.96301-0594	HORTUM	HOSE		1		1		90 MAN
25	06.67124-1134	KELEPÇE	CLAMP		6		1		MAN
26	81.96301-0587	HORTUM	HOSE		1		1		100 MAN
27	06.67124-1136	KELEPÇE	CLAMP		2		1		MAN
28	TC298822-412Y	ŞARJ HAVASI BORUSU	PIPE INTERCOOLER		1		1		

TEMSA	Motor soğutma boru ve hortum hattı Engine cooling, pipe & hose line	Group No : 02-030 Draw. Num. : x Rev. Date : Page : 1
	Vehicle Model: TB162W, TB162Z, TB162X, TB162Y,	

for automatic transmission

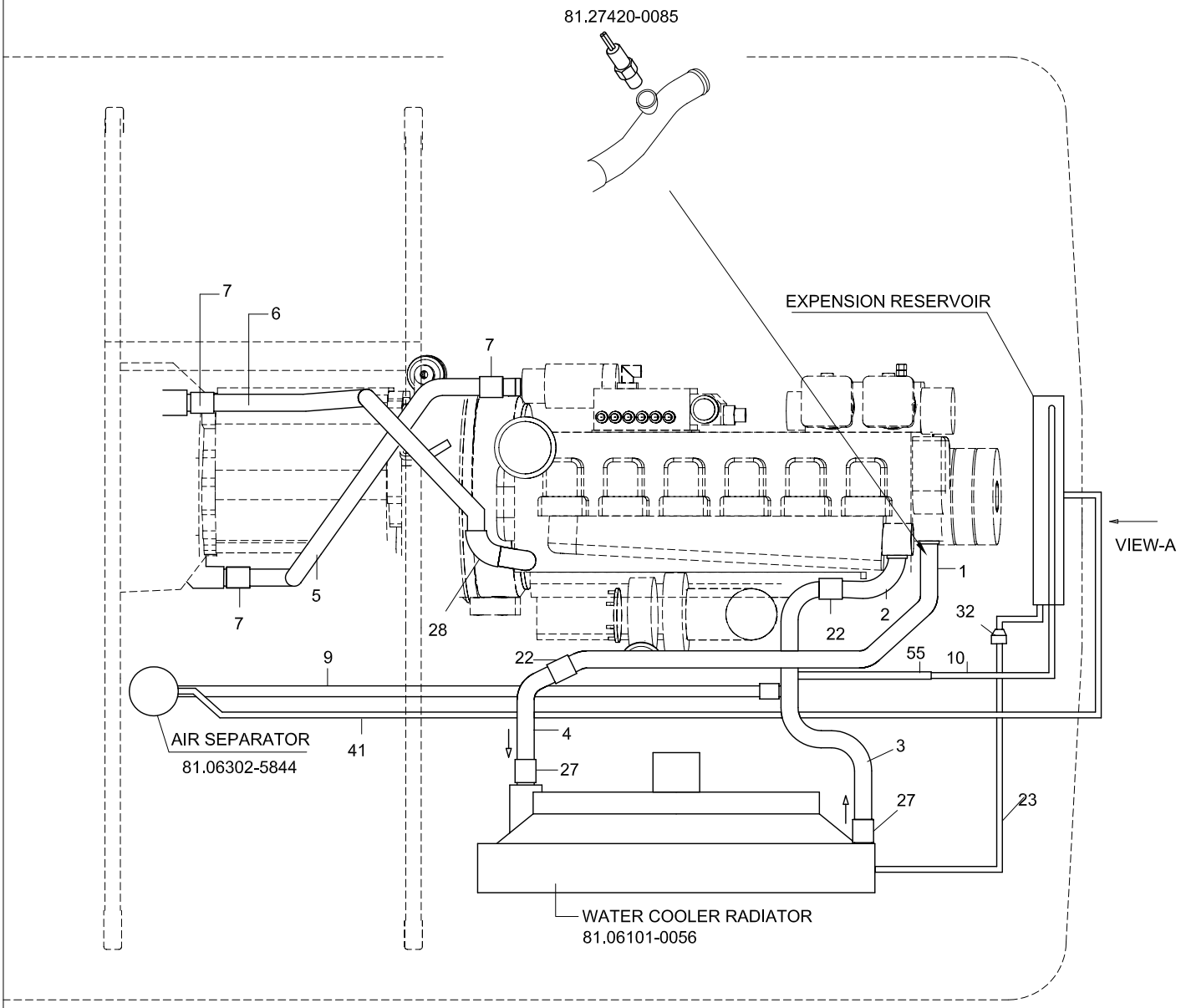

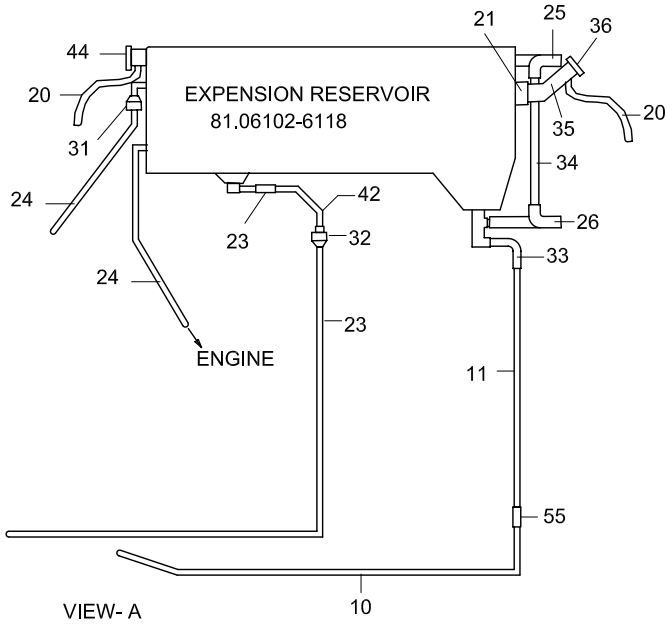

TEMSA	Motor soğutma boru ve hortum hattı Engine cooling, pipe & hose line	Group No : 02-030 Draw. Num. : x Rev. Date : Page : 2
	Vehicle Model: TB162W, TB162Z, TB162X, TB162Y,	

for automatic transmission

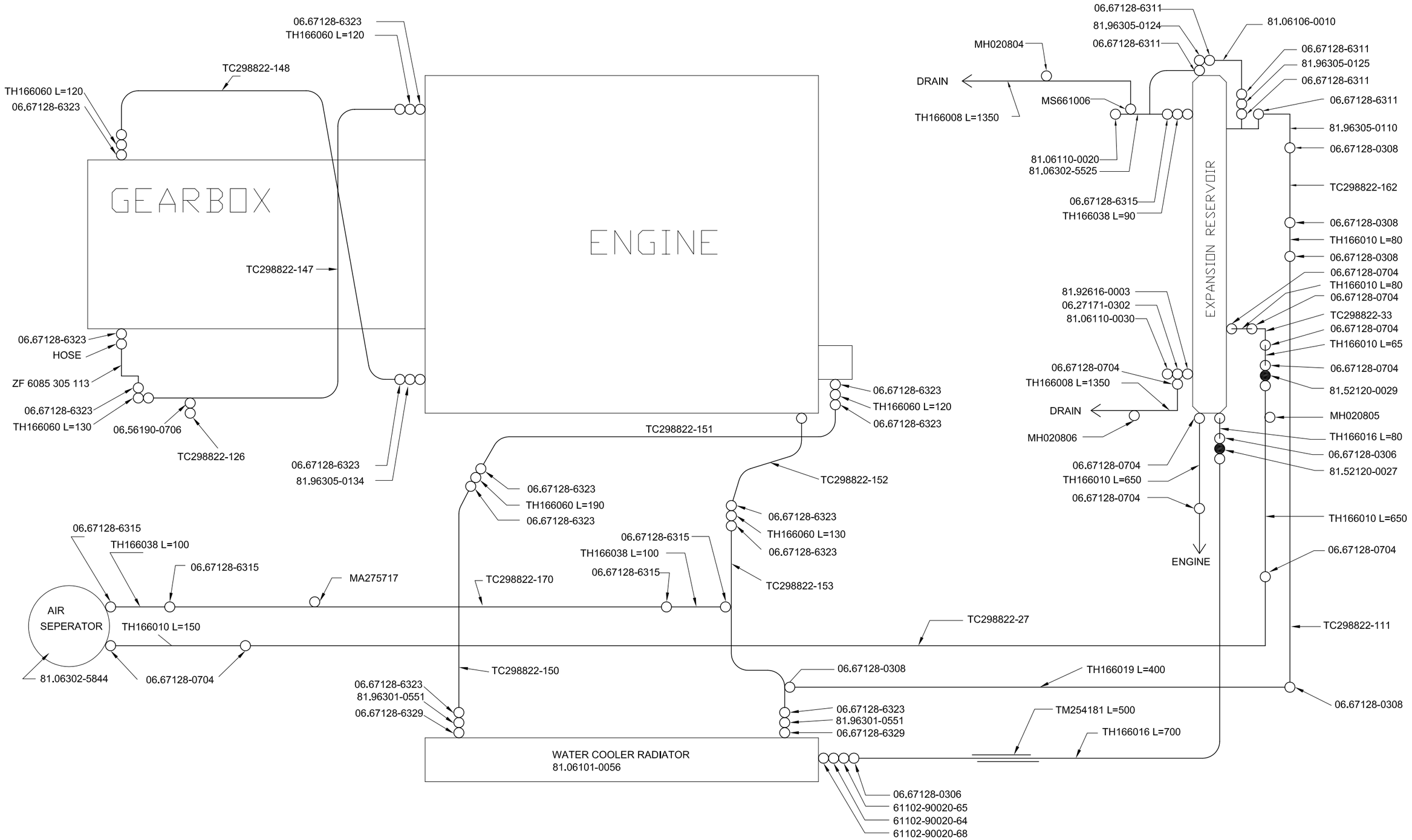

TEMSA	Motor soğutma boru ve hortum hattı Engine cooling, pipe & hose line	Drw.no. TC298822-81/82 Vehicle Model: 360ps TB162W, TB162Z, TB162X, TB162Y	02-030 RevDate: Page: 1

Pos	Part Number	Turkish	English	German	Qty	R/P	From	Up To	Original Number Supplier
1	TC298822-151Y	SOĞUTMA SUYU BORUSU	COOLANT PIPE		1		1		
2	TC298822-152Y	SOĞUTMA SUYU BORUSU	COOLANT PIPE		1		1		
3	TC298822-153Y	SOĞUTMA SUYU BORUSU	COOLANT PIPE		1		1		
4	TC298822-149Y	SOĞUTMA SUYU BORUSU	COOLANT PIPE		1		150604 2004		
5	TC298822-147Y	SOĞUTMA SUYU BORUSU	COOLANT PIPE		1		1		
6	TC298822-148Y	SOĞUTMA SUYU BORUSU	COOLANT PIPE		1		1		
7	TH166050Y	SOĞUTMA SUYU HORTUMU	COOLING WATER HOSE		AR		1		D.50
8	TC298822-146Y	SOĞUTMA SUYU BORUSU	COOLANT PIPE		1		150604 2004		
9	TC298822-170Y	SOĞUTMA SUYU BORUSU	COOLANT PIPE		1		1		
10	TC298822-161Y	SOĞUTMA SUYU BORUSU	COOLANT PIPE		1		1		
11	TC298822-162Y	SOĞUTMA SUYU BORUSU	COOLANT PIPE		1		1		
12	MK146799Y	SOĞUTMA SUYU HORTUMU	COOLING WATER HOSE		AR		150604 2004		
14	TC298822-160Y	SOĞUTMA SUYU BORUSU	COOLANT PIPE		1		1	150604 2004	
15	TC298822-159Y	SOĞUTMA SUYU BORUSU	COOLANT PIPE		1		1	150604 2004	
16	TC298822-158Y	SOĞUTMA SUYU BORUSU	COOLANT PIPE		1		1	150604 2004	
17	TC298822-157Y	SOĞUTMA SUYU BORUSU	COOLANT PIPE		1		1		
18	TC298822-150Y	SOĞUTMA SUYU BORUSU	COOLANT PIPE		1		1		
19	TC298822-156Y	SOĞUTMA SUYU BORUSU	COOLANT PIPE		1		1		
20	TH166008Y	SOĞUTMA SUYU HORTUMU	COOLING WATER HOSE		AR		1		D.8
21	TH166038Y	SOĞUTMA SUYU HORTUMU	COOLING WATER HOSE		AR		1		D.38
22	TH166060Y	SOĞUTMA SUYU HORTUMU	COOLING WATER HOSE		AR		1		D.60
23	TH166010Y	SOĞUTMA SUYU HORTUMU	COOLING WATER HOSE		AR		1		D.10
24	TH166016Y	SOĞUTMA SUYU HORTUMU	COOLING WATER HOSE		AR		1		D.16
25	81.96305-0124	FORMLU HORTUM	SHAPED HOSE		1		1		MAN
26	81.96305-0125	FORMLU HORTUM	SHAPED HOSE		1		1		MAN
27	81.96301-0551	MANŞON	REDUCING SLEEVE		2		1		MAN
28	81.96305-0134	HORTUM DİRSEK	HOSE BEND		1		1		MAN
31	81.52120-0027	KONTROL VALFİ	CHECK VALVE		1		1		MAN
32	81.52120-0029	KONTROL VALFİ	CHECK VALVE		1		1		MAN
33	81.96305-0110	HORTUM DİRSEK	HOSE BEND		1		1		MAN
34	81.06106-0010	CAM BORU	SIGHT GLASS		1		1		MAN
35	81.06302-5525	BORU	PIPE		1		1		MAN
36	81.06110-0020	KAPAK	CAP		1		1		MAN
41	TC298822-27Y	SU BORUSU	PIPE WATER		1		1		
42	TC298822-33Y	SU BORUSU	PIPE WATER		1		1		

for manual transmission
after 2004' 06.15

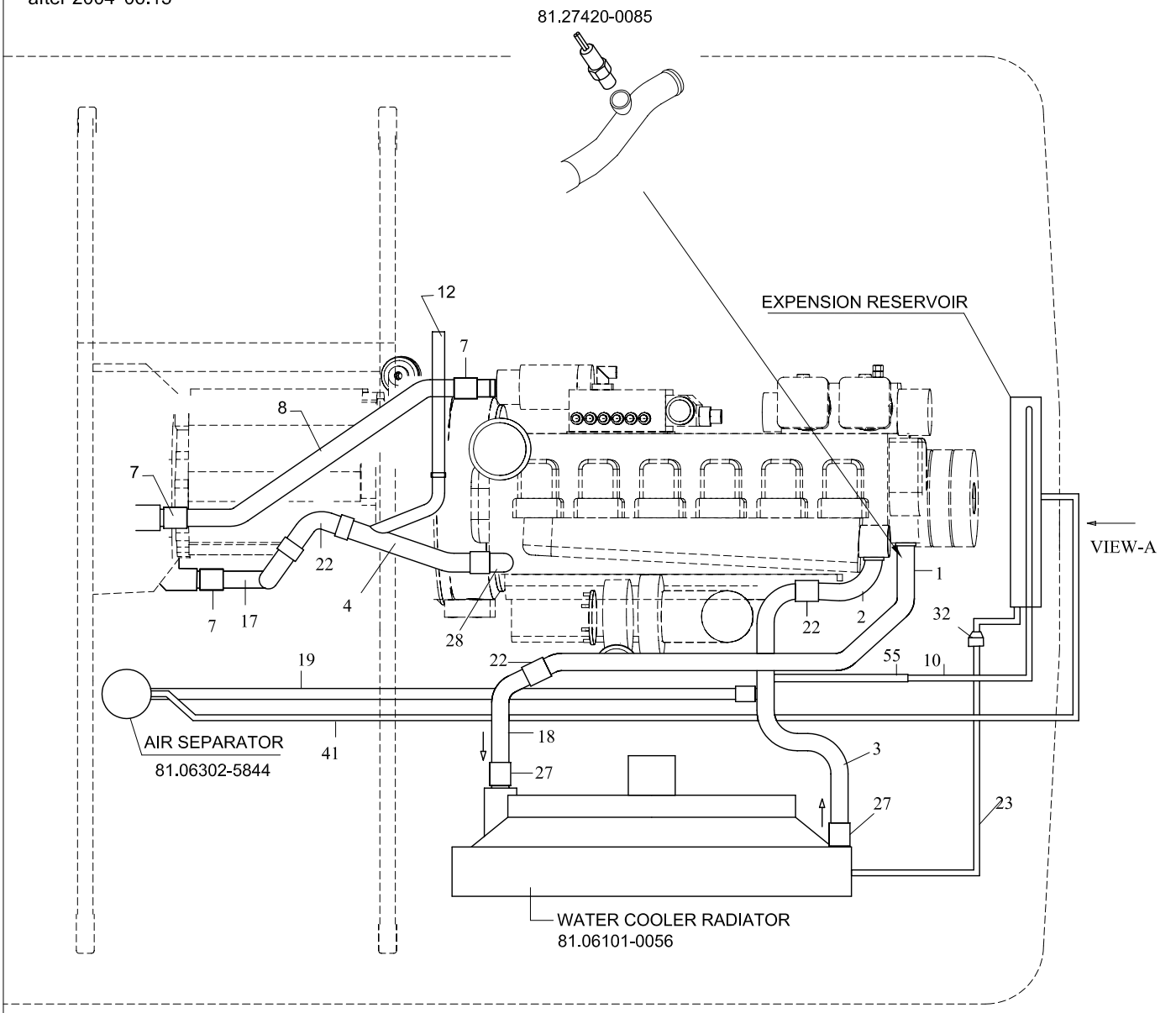

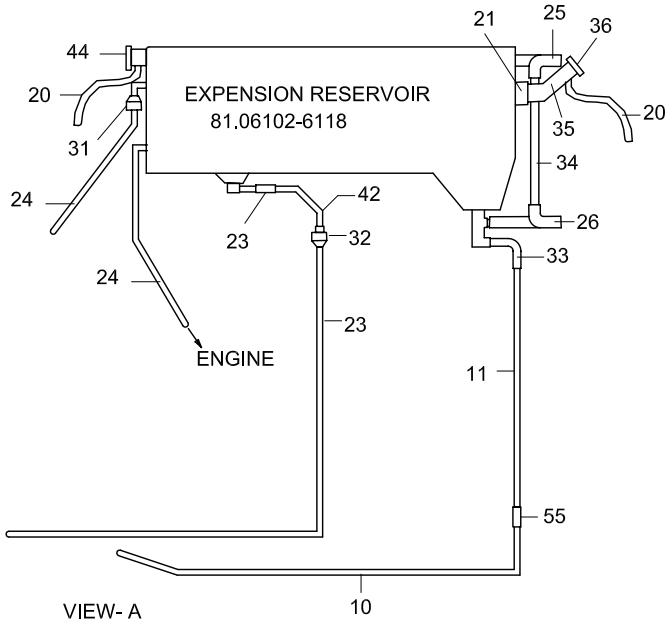

for manual transmission
up to 2004' 06.15

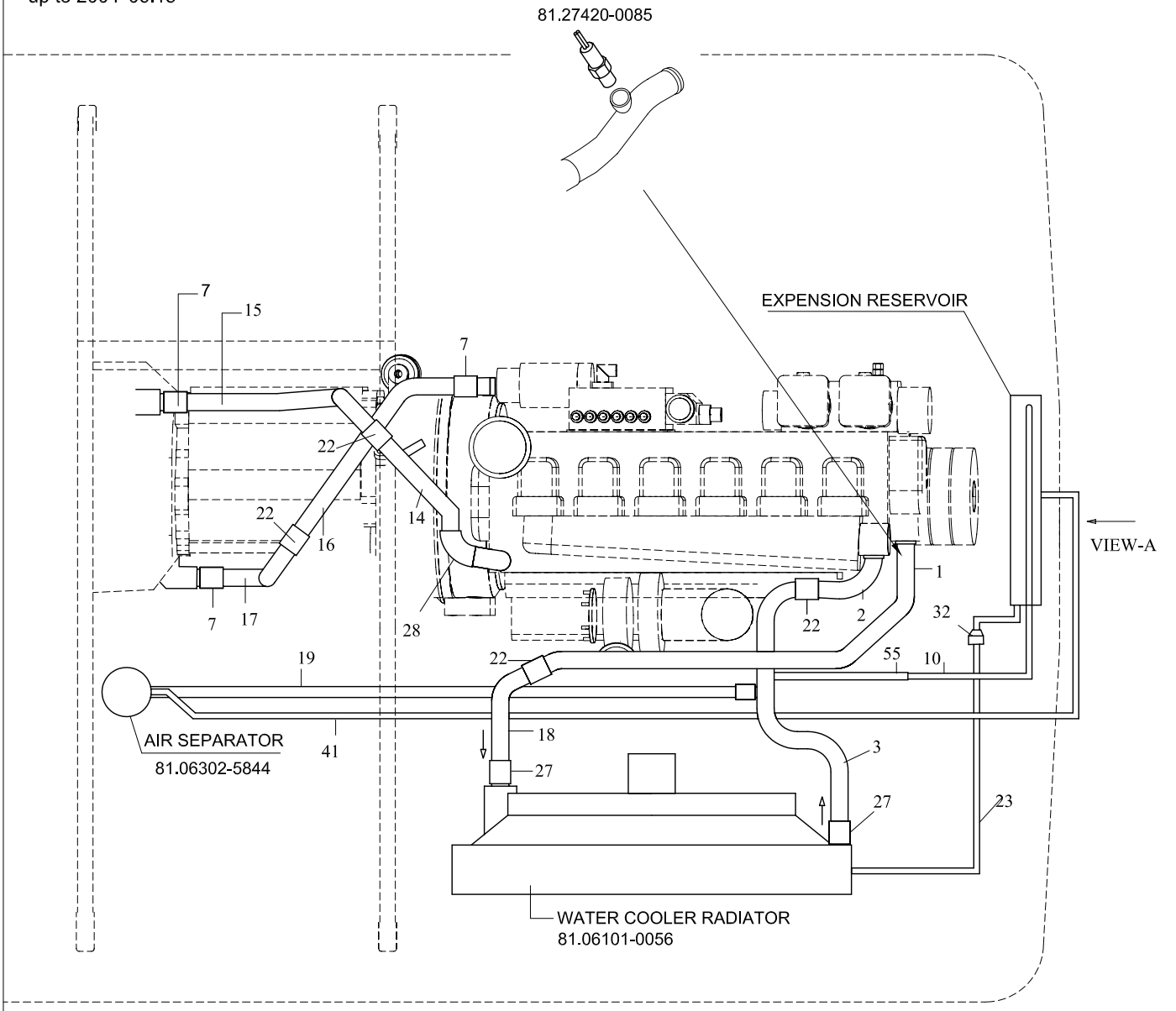

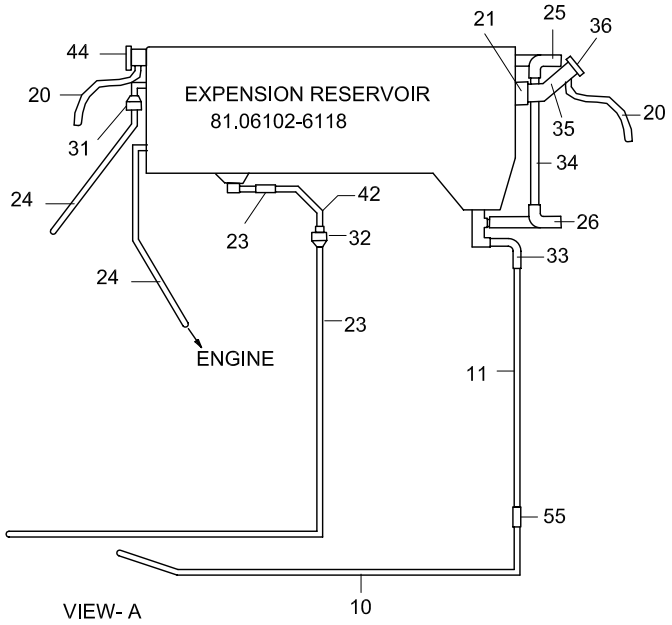

for manual transmission

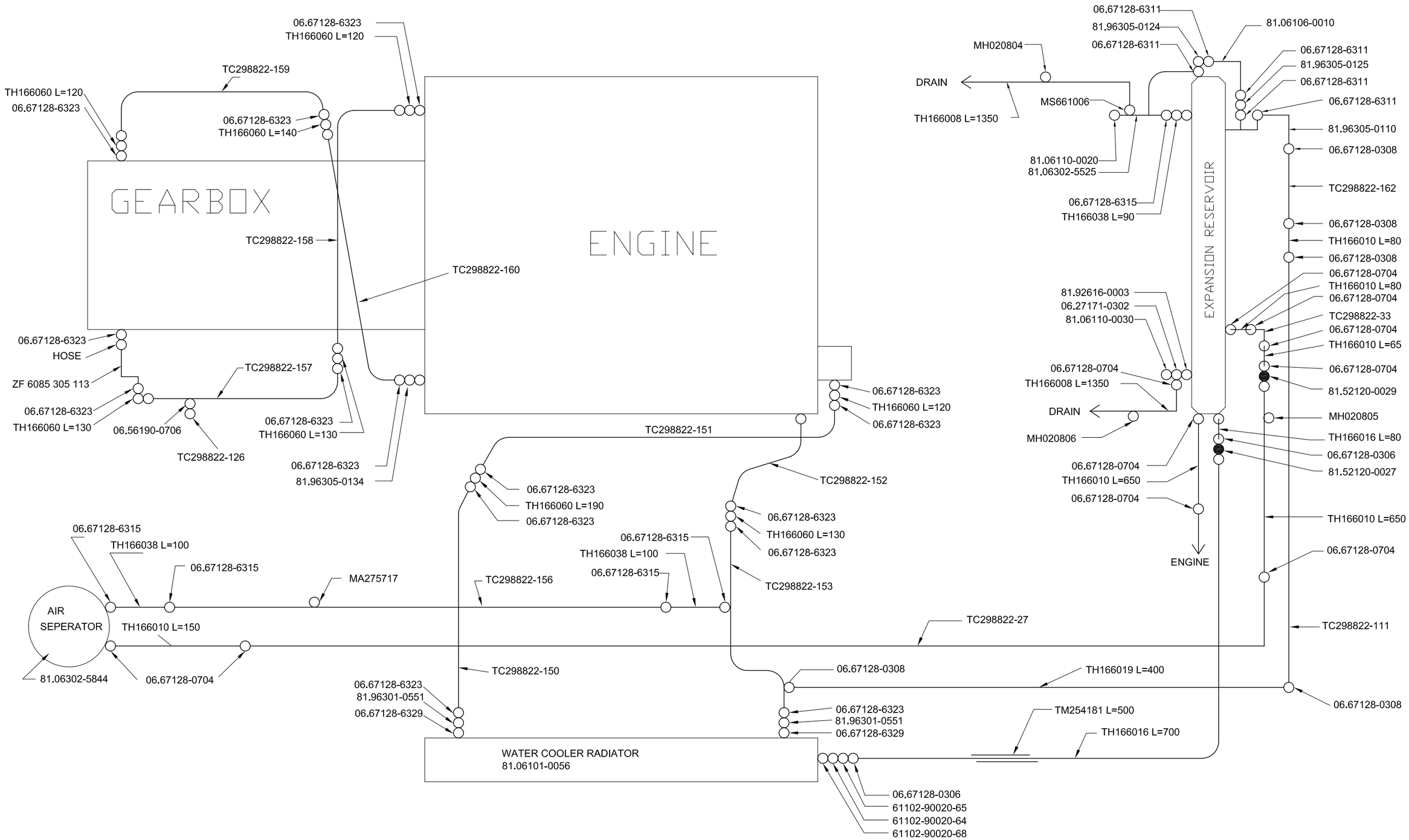

TEMSA	Motor soğutma boru ve hortum hattı Engine cooling, pipe & hose line	Drw.no. TC298822-81/82 Vehicle Model: 360ps **TB162W, TB162Z, TB162X, TB162Y**	**02-030** RevDate: Page: 2

Pos	Part Number	Turkish	English	German	Qty	R/P	From	Up To	Original Number Supplier
44	81.06110-0030	KAPAK	CAP		1		1		MAN
*	81.06302-5844	HAVA AYIRICI	AIR SEPARATOR		1		1		MAN
*	81.06101-0056	SU SOĞUTMA RADYATÖRÜ	WATER COOLER RADIATOR		1		1		MAN
*	81.06102-6118	SOĞUTMA SUYU DENGELEME KABI	EXPENSION RESERVOIR		1		1		MAN
*	81.27420-0085	TERMOSTAT	THERMOSTAT		1		1		MAN
*	81.96305-0092	HORTUM DİRSEK	HOSE BEND		1		1		MAN
*	MS661006Y	KELEPÇE	CLAMP		2		1		
*	06.67128-0704	KELEPÇE	CLAMP		11		1		06.67128-0704 BREEZE
*	06.67128-0306	KELEPÇE	CLAMP		4		1		06.67128-0306 BREEZE
*	06.67128-0308	KELEPÇE	CLAMP		5		1		06.67128-0308 BREEZE
*	06.67128-6311	KELEPÇE	CLAMP		5		1		06.67128-6311 BREEZE
*	06.67128-6315	KELEPÇE	CLAMP		6		1		06.67128-6315 BREEZE
*	06.67128-6323	KELEPÇE	CLAMP		22		1		06.67128-6313 BREEZE
*	06.67128-6329	KELEPÇE	CLAMP		2		1		06.67128-6329 BREEZE
*	MH020804	KLİP	CLIP		3		1		
*	MH020806	KLİP	CLIP		3		1		
*	06.56190-0706	CONTA	SEAL		1		1		MAN
*	6085.305.113	SU BORUSU	PIPE WATER		1		1		ZF
*	TM254181Y	HORTUM KORUYUCU	HOSE PROTECTION		1		1		
*	TC298822-126Y	TAPA	PLUG		1		1		

18.12.2003	Type A51 00	Pet 04.92	Chassis No.	Group 080-0	Figure 08 0486
17:08	Table intercooler		Reference No. 88.#0270-0009 00.00 - 00.00 cooling system D2866 LOH29 EURO3		
Seite: 001					

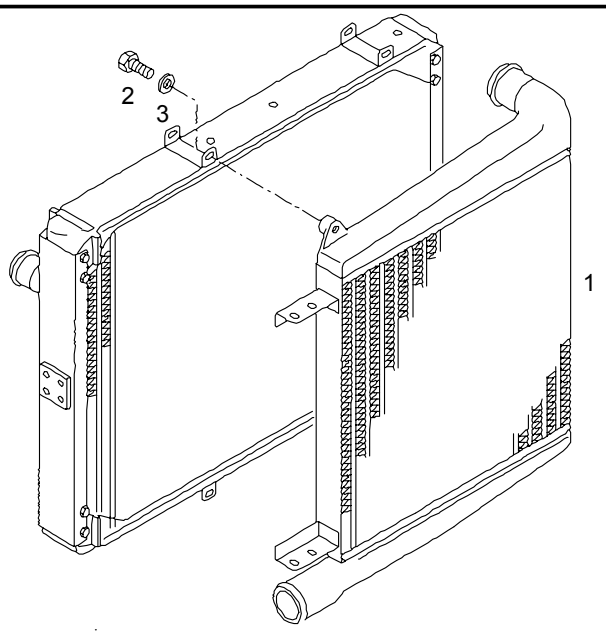

Pos	Part No.	Description	Pat	ME	All	Stk
1	81.06130-0172	intercooler		0		1
2	06.01303-3113	hex bolt M8X20SK-8.8-MAN183-A2C		0		4
3	06.15230-0205	washer 8,4X21X4-ST-MAN183-B1		0		NB
3	06.16739-0014	spring washer A8-MAN183-B1		0		NB

18.12.2003	Type A51 00	Pet 04.92	Chassis No.	Group 080-0	Figure 08 0396
17:08	Table temperature sensor on charge-air pipe		Reference No. 88.#0270-0009 00.00 - 00.00 cooling system D2866 LOH29 EURO3		
Seite: 001					

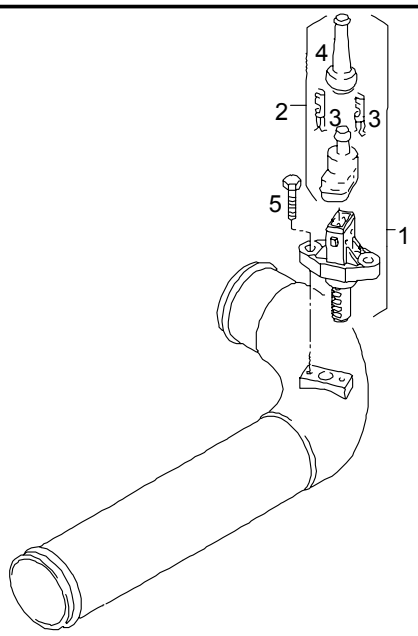

Pos	Part No.	Description	Pat	ME	All	Stk
1	81.27421-0209	temperature sensor charge air system		0		1
2	81.25435-6107	>plug >assembly >2 pin		0		1
3	07.91201-0222	>>spring contact >>2,8-1,0/4,0X3,0-CUSN-SN >>XF0-1<0		0		2
4	81.96410-0499	>>protective cap >>SK35		0		1
5	06.02814-2207	hex lock screw M6X18-100-MAN183-PHR		0		2

18.12.2003	Type A51 00	Pet 04.92	Chassis No.	Group 060-0	Figure 06 0943
17:11	Table cooling water lines from radiator to engine		Reference No. 88.#0270-0009 00.00 - 00.00 cooling system D2866 LOH29 EURO3		
Seite: 001					

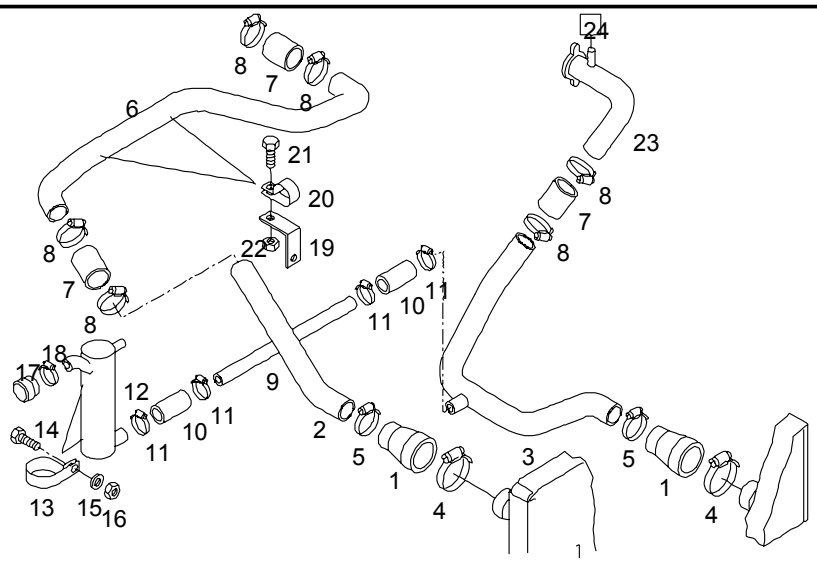

Pos	Part No.	Description	Pat	ME	All	Stk
1	81.96301-0639	reducing sleeve 70X60X90-MVQ3-BL		0		2
2	TC298822-150	coolant pipe -TEMSA 60X1,5		0		1
3	TC298822-153	coolant pipe -Temsa assembly 60X1,5		0		1
4	06.67128-6329	hose clamp AS80-87M		0		2
5	06.67123-4420	hose clamp H60-80		0		2
6	TC298822-151	coolant pipe - TEMSA assembly 60X1,5		0		1
7	TH166060	cooling water hose - TEMSA 60-5X1000		1		NB

18.12.2003	Type A51 00	Pet 04.92	Chassis No.	Group 060-0	Figure 06 0943
17:11	Table cooling water lines from radiator to engine		Reference No. 88.#0270-0009 00.00 - 00.00 cooling system D2866 LOH29 EURO3		
Seite: 002					

Pos	Part No.	Description	Pat	ME	All	Stk
8	06.67123-4420	hose clamp H60-80		0		6
9	TC298822-156	coolant pipe TEMSA assembly B-38X1,5		0		1
10	TH166038	cooling water hose TEMSA 38-5X1000		1		NB
11	06.67128-6318	hose clamp AS48-55M		0		4
12	81.06302-5844	air separator assembly		0		1
13	88.97440-0012	clamp A80X25X68-9-UST37-2-A4C		0		2
14	06.01283-4913	hex bolt M6X20-8.8-MAN183-B1		0		2
15	06.15013-0409	washer A6,4X12X1,6-200HV-MAN183-B1		0		2
16	06.11240-0303	hex lock nut AM6-8-MAN183-B1		0		2
17	81.96002-0452	cap 36-EPDM1-70		0		1
18	06.67128-6315	hose clamp AS40-47M		0		1
19	88.97480-0791	angle 2 holes 65X65X30X3		0		2
20	81.97401-0889	clamp A58X30X64-8,5-UST37-2-A4C		0		2
21	06.01283-5112	hex bolt M8X18-8.8-MAN183-B1		0		2
22	06.11240-0404	hex lock nut BM8-8-MAN183-B1		0		2
23	TC298822-152	cooling pipe - supplier Temsa				

18.12.2003	Type A51 00	Pet 04.92	Chassis No.	Group 060-0	Figure 06 0943	
17:11	Table cooling water lines from radiator to engine			Reference No. 88.#0270-0009 00.00 - 00.00 cooling system D2866 LOH29 EURO3		
Seite: 003						

Pos	Part No.	Description	Pat	ME	All	Stk
24		from surge tank				*

18.12.2003	Type A51 00	Pet 04.92	Chassis No.	Group 060-0	Figure 06 0730
17:12	Table header tank with mounting parts		Reference No. 88.#0270-0009 00.00 - 00.00 cooling system D2866 LOH29 EURO3		
Seite: 001					

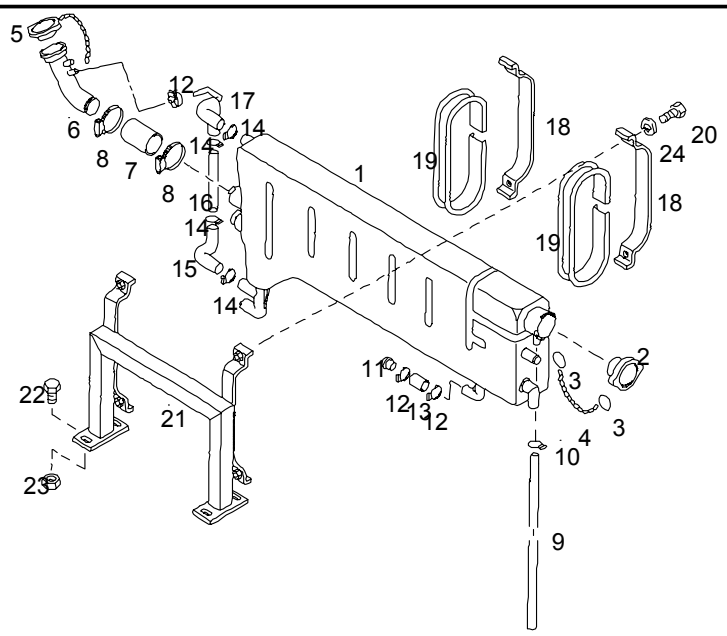

Pos	Part No.	Description	Pat	ME	All	Stk
1	81.06102-6118	header tank		0		1
2	81.06110-0042	filler cap with valve 50,3X15,5/+0,7-0,1-2-21,3		0		1
3	81.92616-0003	key ring 19X1,5X2,4-ST36		0		2
4	06.27171-0302	chain A0,4X14-MS		1		NB
5	81.06110-0020	filler cap with valve 52X15,5/+1-0,06-2-21,3 with chain		0		1
6	81.06302-5525	coolant pipe assembly 38X1,5 CUZN		0		1
7	TH166038	cooling water hose TEMSA 38-5X1000		1		NB

18.12.2003	Type A51 00	Pet 04.92	Chassis No.	Group 060-0	Figure 06 0730
17:12	Table header tank with mounting parts		Reference No. 88.#0270-0009 00.00 - 00.00 cooling system D2866 LOH29 EURO3		
Seite: 002					

Pos	Part No.	Description	Pat	ME	All	Stk
8	06.67128-6315	hose clamp AS40-47M		0		2
9	TH166016	tube TEMSA		1		NB
10	06.67128-0702	hose clamp AL8-11		0		NB
11	06.24044-1209	button-head rivet 8X16-ALMG5G34		0		1
12	06.67128-0704	hose clamp AL12-16		0		3
13	04.27405-9501	cooling water hose 8-5X20000		1		1
14	06.67128-0711	hose clamp AL27-31		0		4
15	81.96305-0125	shaped hose 22X22-MAN334-2		0		1
16	81.06106-0010	sight glass		0		1
17	81.96305-0124	shaped hose 22X22X8-MAN334-2		0		1
18	81.72440-2819	bracket		0		2
	81.97487-0196	angle 66X30X20 2 holes		0		1
19	04.29600-0511	seating strip 40X25,5-GI		1		NB
20	06.01283-5117	hex bolt M8X30-8.8-MAN183-B1		0		4
		fig. 21-23 deleted				*
24	06.16739-0014	spring washer A8-MAN183-B1		0		4

18.12.2003	Type A51 00	Pet 04.92	Chassis No.	Group 060-0	Figure 06 0938
17:12	Table radiator with mount		Reference No. 88.#0270-0009 00.00 - 00.00 cooling system D2866 LOH29 EURO3		
Seite: 001					

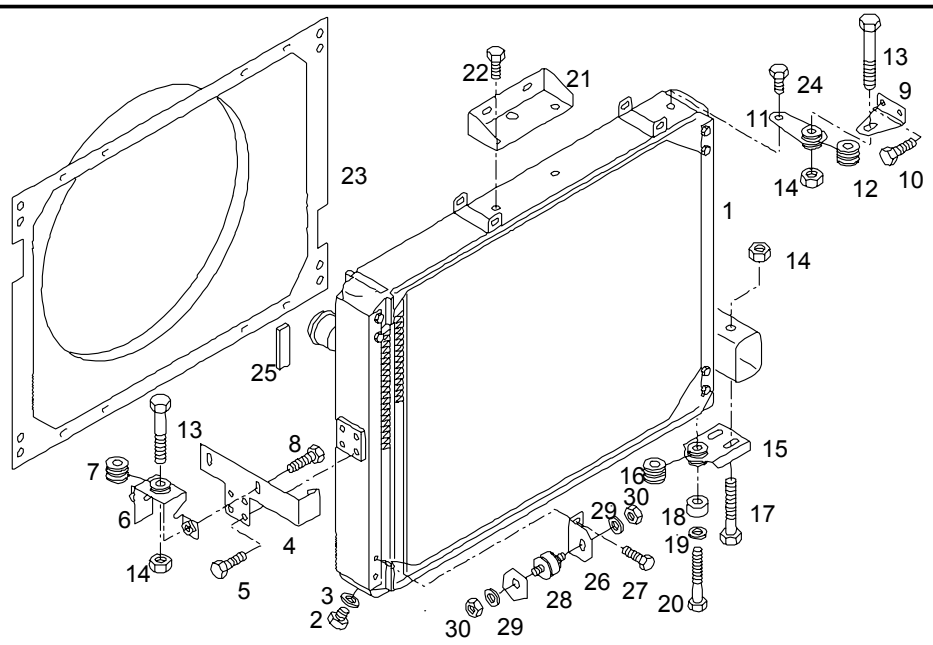

Pos	Part No.	Description	Pat	ME	All	Stk
1	81.06101-0056	radiator		0		1
2	06.08042-0603	>drain plug >M14X1,5-ST-A3C		0		1
3	06.56190-0706	>seal >A14X20-CU		0		1
4	81.06230-0060	fish plate		0		1
5	06.02813-4309	hex lock screw M8X22-10.9-MAN183-B1		0		4
6	81.06230-6010	bracket assembly		0		1
7	81.96210-0426	>bonded rubber mounting		0		1
8	06.02813-4409	hex lock screw M10X22-10.9-MAN183-B1		0		2
9	81.06230-0059	bracket		0		1

18.12.2003	Type A51 00	Pet 04.92	Chassis No.	Group 060-0	Figure 06 0938
17:12	Table radiator with mount		Reference No. 88.#0270-0009 00.00 - 00.00 cooling system D2866 LOH29 EURO3		
Seite: 002					

Pos	Part No.	Description	Pat	ME	All	Stk
10	06.02813-4309	hex lock screw M8X22-10.9-MAN183-B1		0		2
11	81.06230-6011	bracket assembly		0		1
12	81.96210-0426	>bonded rubber mounting		0		1
13	06.02813-4817	hex lock screw M12X1,5X60-10.9-MAN183-B1		0		2
14	06.11251-2003	hex lock nut M12X1,5-10-MAN183-B1		0		2
14		>for mounting bolts >upper				*
14	06.11251-2005	hex lock nut M14X1,5-10-MAN183-B1		0		2
14		>for mounting bolts >lower				*
15	81.06230-6012	bracket assembly		0		1
16	81.96210-0426	>bonded rubber mounting		0		1
17	06.02813-4920	hex lock screw M14X1,5X75-10.9-MAN183-B1		0		2
18	81.93020-0793	bush 8,4X12H11X40,7-ST37-2BK-A3C		0		1
19	06.15190-0309	washer 8,4X24X2-140HV-MAN183-B1		0		1
20	06.01014-9116	hex shoulder stud M8X55-10.9-MAN183-PHR		0		1
21	81.06640-0144	bracket		0		2
22	06.02813-4406	hex lock screw M10X16-10.9-MAN183-B1		0		4
23	81.06620-0163	air duct		0		1

18.12.2003	Type A51 00	Pet 04.92	Chassis No.	Group 060-0	Figure 06 0938
17:12	Table radiator with mount		Reference No. 88.#0270-0009 00.00 - 00.00 cooling system D2866 LOH29 EURO3		
Seite: 003					

Pos	Part No.	Description	Pat	ME	All	Stk
24	06.02815-8305	hex lock screw M8X14-10.9-MAN183-A2C		0		10
25	04.33326-9025	foam tape self-adhesive 10X25X2000-SW-SK		1		NB
26	81.06230-0065	angle		0		1
27	06.02813-4307	hex lock screw M8X18-10.9-MAN183-B1		0		2
28	81.96210-0100	rubber-to-metal pad M10X34X34-50X45-NR/SBR4-45		0		1
29	06.15013-0412	washer A10,5X20X2-200HV-MAN183-B1		0		2
30	06.11240-0406	hex lock nut BM10-8-MAN183-B1		0		2

TEMSA	Motor soğutma boru ve hortum hattı Engine cooling, pipe & hose line	Group No : 02-031 Draw. Num. : x Rev. Date :
	Vehicle Model: TB163W, TB163Z, TB163X, TB163Y	Page : 1

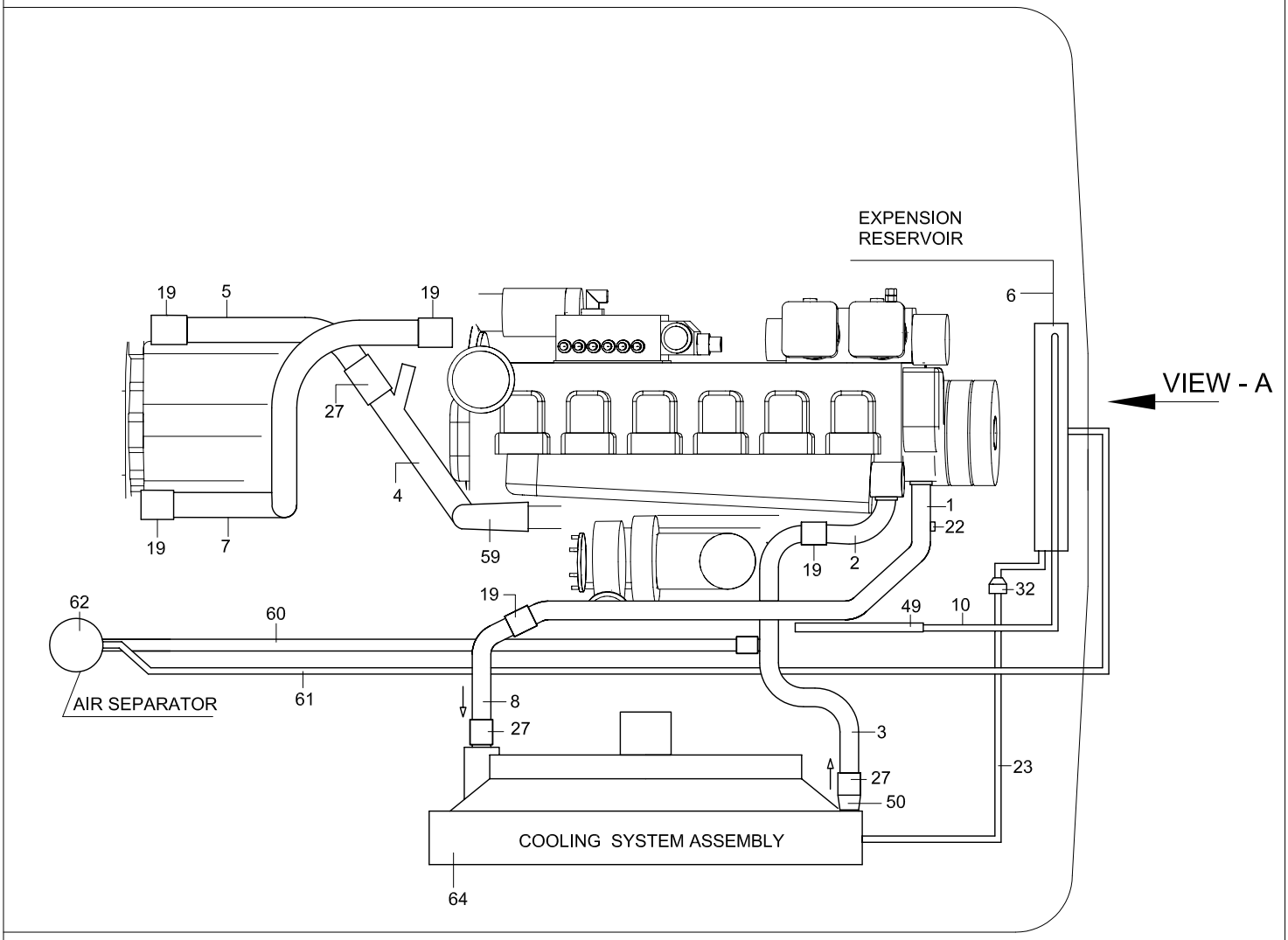

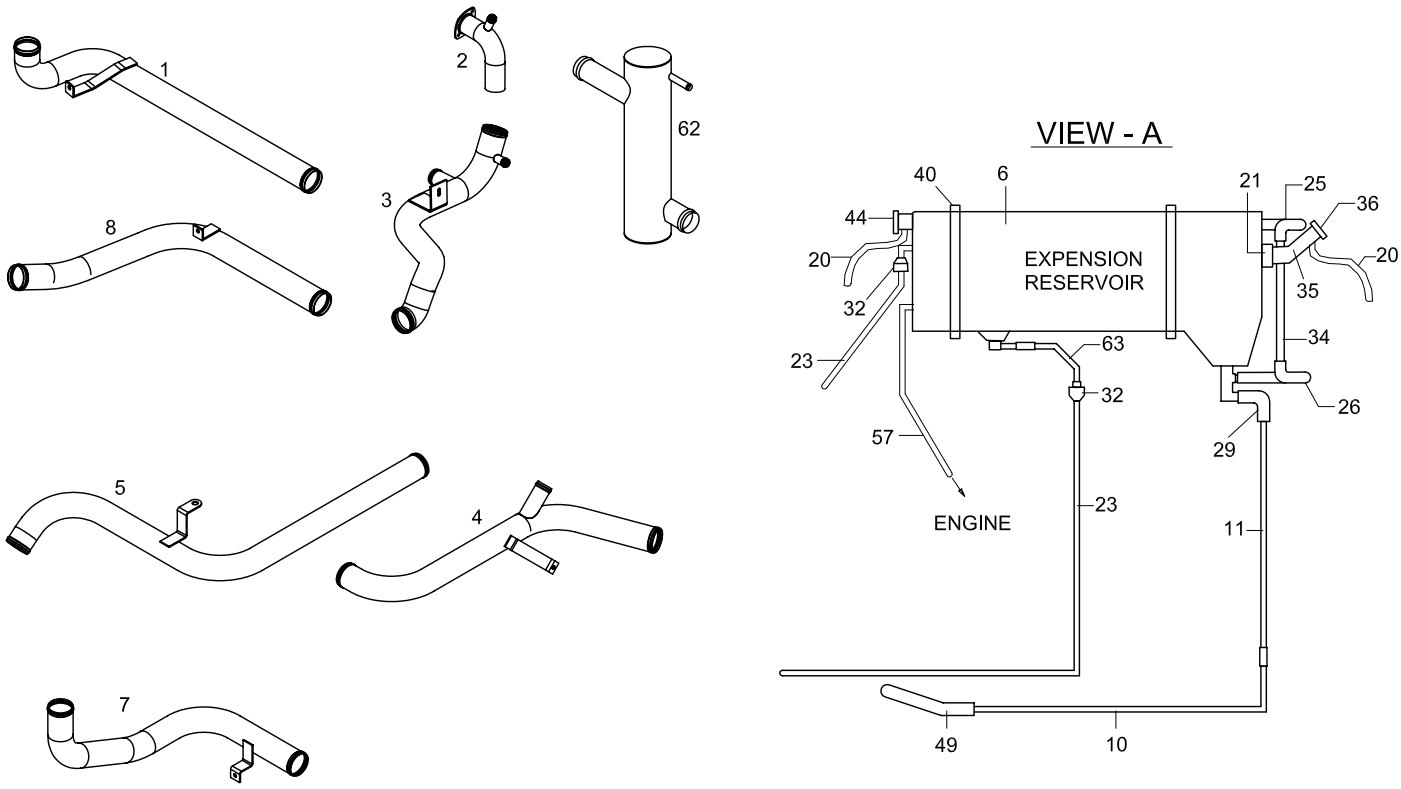

TEMSA	Motor soğutma boru ve hortum hattı Engine cooling, pipe & hose line	Drw.no. TC298822-410 Vehicle Model: 410ps TB163W, TB163Z, TB163X, TB163Y	02-031 RevDate: Page: 1

Pos	Part Number	Turkish	English	German	Qty	R/P	From	Up To	Original Number Supplier
1	TO267110Y	SOĞUTMA SUYU BORUSU-TERMOSTAT	COOLING WATER HOSE THERMOSTAT		1		1		
2	TC298822-413Y	SOĞUTMA SUYU BORUSU-MOTOR	COOLING WATER HOSE ENGINE		1		1		
3	TC298822-414Y	SOĞUTMA SUYU BORUSU-RADYAT ALT	COOLING WATER HOSE RADIATOR BUTTOM		1		1		
4	TO196105Y	SOĞUK SU BORUSU	COOLANT PIPE		1		1		
5	TO196106Y	SOĞUK SU BORUSU	COOLANT PIPE		1		1		
6	81.06102-6118	SOĞUTMA SUYU DENGELEME KABI	EXTENSION TANK		1		1		MAN
7	TO196104Y	SOĞUK SU BORUSU	COOLANT PIPE		1		1		
8	TC298822-415Y	SOĞUTMA SUYU BORUSU-RADYAT GİRİŞ	COOLING WATER HOSE RADIATOR INLET		1		1		
10	TC298822-161Y	SICAK SU BORUSU ÇELİK	HOT WATER PIPE STEEL		1		1		
11	TC298822-162Y	SICAK SU BORUSU ÇELİK	HOT WATER PIPE STEEL		1		1		
19	TO166060	HORTUM	HOSE		1.08mt		1		
20	TH162008Y	HORTUM	HOSE		3mt		1		
21	TO166038	HORTUM	HOSE		0.6mt		1		
22	81.27420-0085	SICAKLIK SENSÖRÜ	TEMPERATURE SENSOR		1		1		
23	TO166010	HORTUM	HOSE		3mt		1		
25	81.96305-0124	HORTUM DİRSEĞİ	HOSE ELBOW		1		1		MAN
26	81.96305-0125	HORTUM DİRSEĞİ	HOSE ELBOW		1		1		MAN
27	TO267114Y	HORTUM	HOSE		0.3mt		1		d55
28	81.96305-0110	HORTUM DİRSEĞİ	HOSE ELBOW		1		1		MAN
32	81.52120-0029	KONTROL VALFİ	CHECK VALVE		2		1		MAN
34	81.06106-0010	CAM BORU	SIGHT GLASS		1		1		MAN
35	81.06302-5525	SOĞUK SU BORUSU	COOLING WATER PIPE		1		1		MAN
36	81.06110-0020	DEPO KAPAĞI VALFLİ	FILLER CAP WITH VALVE		1		1		MAN
40	81.72440-2819	KUŞAK	SEATING STRIP		2		1		MAN
44	81.06110-0042	DEPO KAPAĞI VALFLİ	FILLER CAP WITH VALVE		1		1		MAN
49	TO166019	HOTUM	HOSE		0.7mt		1		
50	81.96301-0551	GEÇİŞ MANŞONU	REDUCING SLEEVE		1		1		MAN
57	TH162010Y	HOTUM	HOSE		0.65mt		1		
59	81.96305-0134	HORTUM DİRSEĞİ	HOSE ELBOW		1		1		MAN
60	TC298822-170Y	HAVA AYIRICI BORUSU	PIPE, AIR SEPARATOR		1		1		otomatik şanzuman
60	TC298822-156Y	HAVA AYIRICI BORUSU	PIPE, AIR SEPARATOR		1		1		manual şanzuman
61	TC298822-27Y	HAVA AYIRICI BORUSU ÇELİK	PIPE, AIR SEPARATOR STEEL		1		1		
62	81.06302-5844	HAVA AYIRICI	AIR SEPARATOR		1		1		
63	TC298822-33Y	HAVA AYIRICI BORUSU ÇELİK	PIPE, AIR SEPARATOR STEEL		1		1		
64	REF.02-011	SOĞUTMA SİSTEMİ KOMPLE	COOLING SYSTEM ASSEMBLY		1		1		MAN

05.08.2004	A51 00	04.92		080-0	08 0344
13:15	intercooler with mounting		88.#0270-0015 00.00 - 00.00 cooling system D2866 LOH29/D2876 LOH02 (301/328KW; 410/460PS)		
Seite: 001					

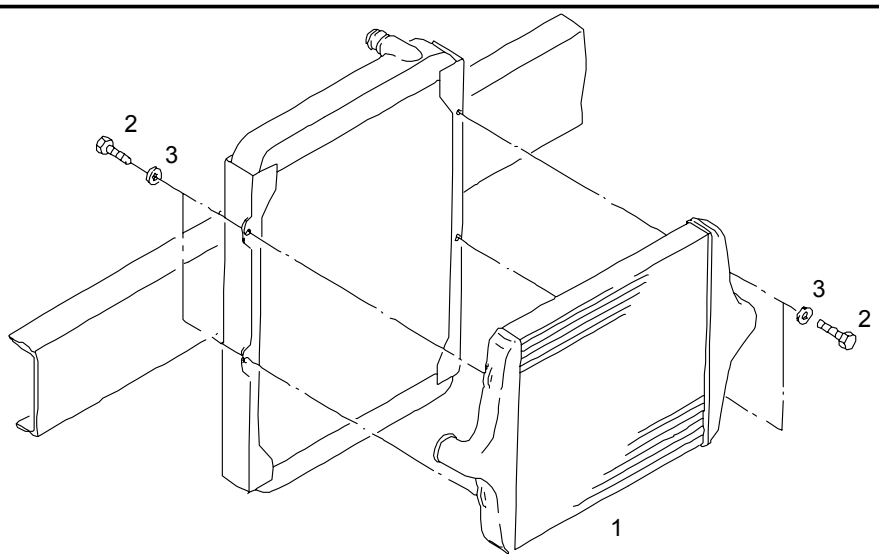

				ME	All	Stk
1	81.06130-0173	intercooler	0602	0		1
1	81.06130-0184	intercooler		0		1
		fig. 2 + 3 deleted				*

05.08.2004	A51 00	04.92		080-0	08 0345
13:17	charge-air pipes with mounting		88.#0270-0015 00.00 - 00.00 cooling system D2866 LOH29/D2876 LOH02 (301/328KW; 410/460PS)		
Seite: 001					

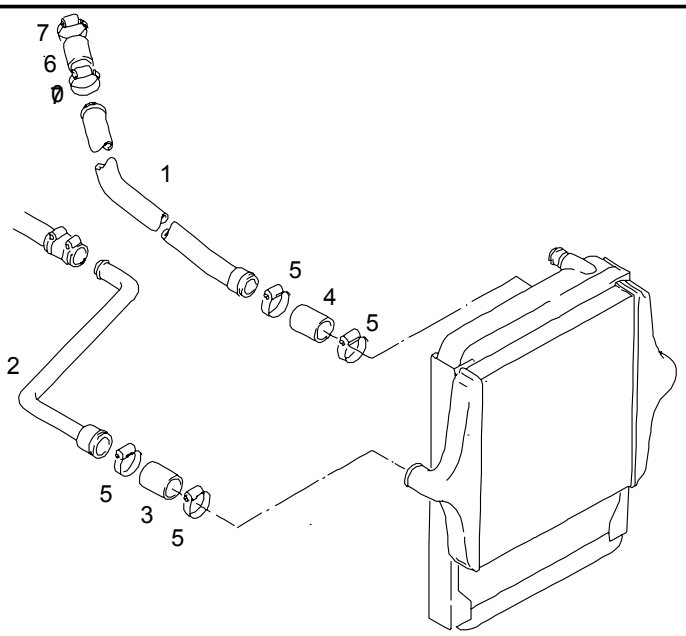

				ME	All	Stk
1	TO267108	charge-air pipe assembly		0		1
	06.67041-0123	clamp 90,5-ZNPHR5F		0		1
	06.01283-5217	hex bolt M10X30-8.8-MAN183-B1		0		1
	06.11185-0115	hexagon nut M10-8-A3C		0		1
2	TO267112	charge-air pipe		0		1
3	81.96301-0594	hose 90X4X120-M3055-6		0		1
4	81.96301-0495	hose 90X5X120-M3055-4-SW		0		1
5	06.67124-1134	hose clamp TS83-105		0		NB

05.08.2004	A51 00	04.92		080-0	08 0345
13:17	charge-air pipes with mounting		88.#0270-0015 00.00 - 00.00 cooling system D2866 LOH29/D2876 LOH02 (301/328KW; 410/460PS)		
Seite: 002					

				ME	All	Stk
6	81.96301-0900	charge air hose 90X90X282-M3055-7L-RT		0		1
6	81.96301-0669	charge air hose 90X90X268-M3055-7-RT		0		1
		>>clamps >>06.67124-11341				*
		>>below >>use				*
7	06.67124-1134	hose clamp TS83-105		0		NB

05.08.2004	A51 00	04.92		080-0	08 0396
13:17	temperature sensor on charge-air pipe		88.#0270-0015 00.00 - 25.02 cooling system D2866 LOH29/D2876 LOH02 (301/328KW; 410/460PS)		
Seite: 001					

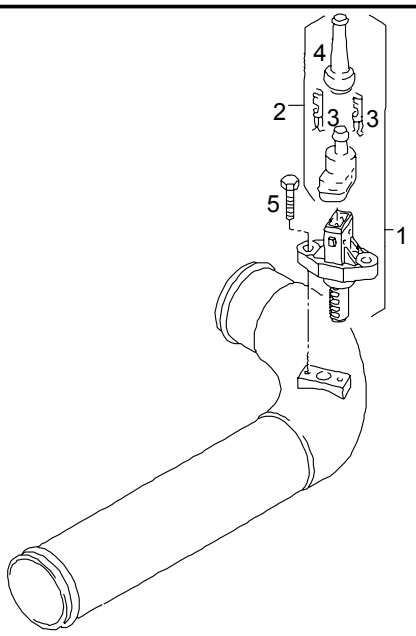

				ME	All	Stk
1	81.27421-0209	temperature sensor charge air system		0		1
2	81.25435-6107	>plug >assembly >2 pin		0		1
3	07.91201-0222	>>spring contact >>2,8-1,0/4,0X3,0-CUSN-SN >>XF0-1<0		0		2
4	81.96410-0499	>>protective cap >>SK35		0		1
5	06.02814-2207	hex lock screw M6X18-100-MAN183-PHR		0		2

05.08.2004	A51 00	04.92		060-0	06 1305
13:58	cooling system		88.#0270-0015 00.00 - 00.00 cooling system D2866 LOH29/D2876 LOH02 (301/328KW; 410/460PS)		
Seite: 001					

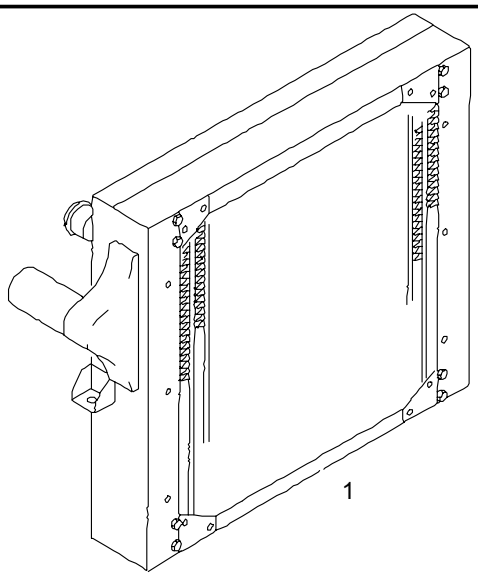

				ME	All	Stk
1	81.06100-6407	cooling system assembly	0602	0		1
1	81.06100-6449	cooling system assembly		0		1

05.08.2004	A51 00	04.92		060-0	06 1277
14:10	radiator air scoop and fastening		88.#0270-0015 00.00 - 00.00 cooling system D2866 LOH29/D2876 LOH02 (301/328KW; 410/460PS)		
Seite: 001					

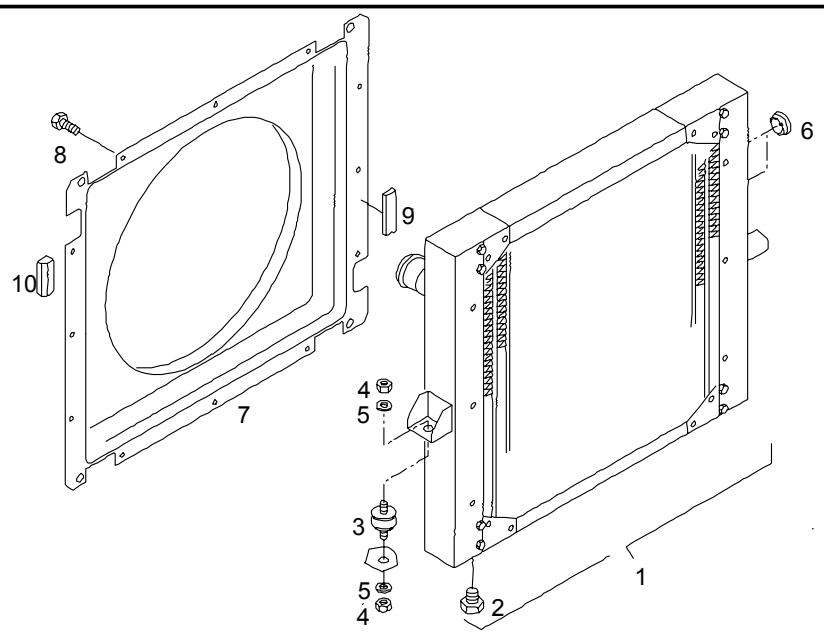

				ME	All	Stk
1	81.06101-6476	radiator	0602	0		1
1	81.06101-6480	radiator		0		1
2	81.90310-0610	>drain plug	0602	0		2
2	81.90310-0610	>drain plug		0		1
	81.98130-0604	>breather adapter		0		1
3	81.96210-0042	rubber-to-metal pad M10X25X25-50X30-NR/SBR4-55		0		2
4	06.11240-0406	hex lock nut BM10-8-MAN183-B1		0		4
5	06.15013-0412	washer A10,5X20X2-200HV-MAN183-B1		0		4
6	81.96001-0231	grommet		0		NB
7	81.06620-0153	air scoop		0		4

05.08.2004	A51 00	04.92		060-0	06 1277
14:10	radiator air scoop and fastening		88.#0270-0015 00.00 - 00.00 cooling system D2866 LOH29/D2876 LOH02 (301/328KW; 410/460PS)		
Seite: 002					

				ME	All	Stk
8	06.02815-8304	hex lock screw M8X12-10.9-MAN183-A2C		0		16
9	04.33326-9025	foam tape self-adhesive 10X25X2000-SW-SK		1		NB
10	A0.03686-5189	door sealing strip 4270 MM		0		NB

22.08.2004	Type A51 00	Pet 04.92	Chassis No.	Group 060-0	Figure 06 0730
11:37	Table header tank with mounting parts		Reference No. 88.#0270-0004 00.00 - 00.00 cooling system D2876 LOH05		
Seite: 001					

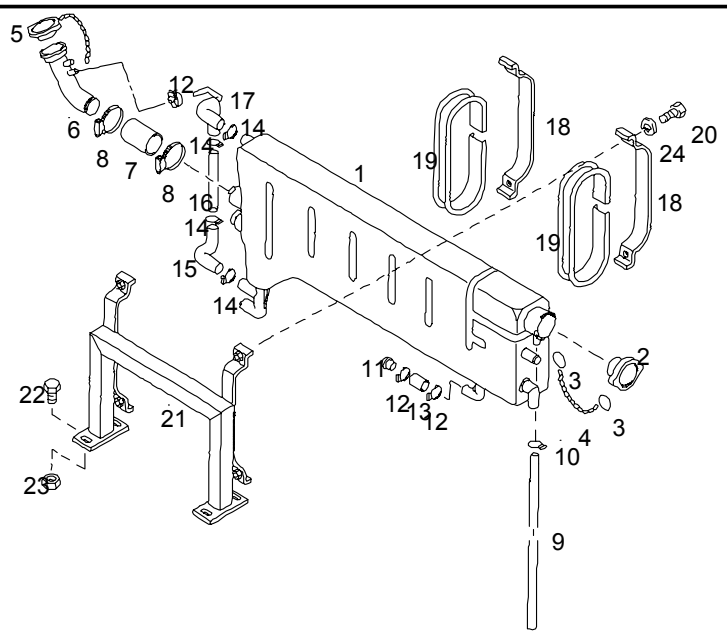

Pos	Part No.	Description	Pat	ME	All	Stk
1	81.06102-6118	header tank		0		1
2	81.06110-0042	filler cap with valve 50,3X15,5/+0,7-0,1-2-21,3		0		1
3	81.92616-0003	key ring 19X1,5X2,4-ST36		0		2
4	06.27171-0302	chain A0,4X14-MS		1		NB
5	81.06110-0020	filler cap with valve 52X15,5/+1-0,06-2-21,3 with chain		0		1
6	81.06302-5525	coolant pipe assembly 38X1,5 CUZN		0		1
7	04.27405-9538	cooling water hose 38-5X1000		1		NB

22.08.2004	Type A51 00	Pet 04.92	Chassis No.	Group 060-0	Figure 06 0730
11:37	Table header tank with mounting parts		Reference No. 88.#0270-0004 00.00 - 00.00 cooling system D2876 LOH05		
Seite: 002					

Pos	Part No.	Description	Pat	ME	All	Stk
8	06.67128-6315	hose clamp AS40-47M		0		2
9	04.35160-9711	polyamide tube 11X1,5-PA11/12PHLY		1		NB
10	06.67128-0702	hose clamp AL8-11		0		NB
11	06.24044-1209	button-head rivet 8X16-ALMG5G34		0		1
12	06.67128-0704	hose clamp AL12-16		0		3
13	04.27405-9501	cooling water hose 8-5X20000		1		1
14	06.67128-0711	hose clamp AL27-31		0		4
15	81.96305-0125	shaped hose 22X22-MAN334-2		0		1
16	81.06106-0010	sight glass		0		1
17	81.96305-0124	shaped hose 22X22X8-MAN334-2		0		1
18	81.72440-2819	bracket		0		2
	81.97487-0196	angle 66X30X20 2 holes		0		1
19	04.29600-0511	seating strip 40X25,5-GI		1		NB
20	06.01283-5117	hex bolt M8X30-8.8-MAN183-B1		0		4
		fig. 21-23 deleted				*
24	06.16739-0014	spring washer A8-MAN183-B1		0		4

03 HAVA EMİŞ MOTOR İÇİN
AIR INTAKE FOR ENGINE
x

03-010	Hava emiş motor için Air intake for Engine x	TB162W TB163W	TB162Z TB163Z	TB162X TB163X	TB162Y TB163Y
03-020	Hava temizleyici Air cleaner x	TB162W TB163W	TB162Z TB163Z	TB162X TB163X	TB162Y TB163Y

TEMSA	Hava emiş motor için Air intake for engine	Drw.no: Vehicle Model: TB162W, TB162Z, TB162X, TB162Y TB163W, TB163Z, TB163X, TB163Y	03-010 RevDate: Page: 1

Pos	Part Number	Turkish	English	German	Qty	R/P	From	Up To	Original Number Supplier

28.12.2003	A51 00	04.92		080-0	08 0322
20:48	air cleaner		81.#02C0-0310 00.00 - 00.00 intake system EURO 3		
Seite: 001					

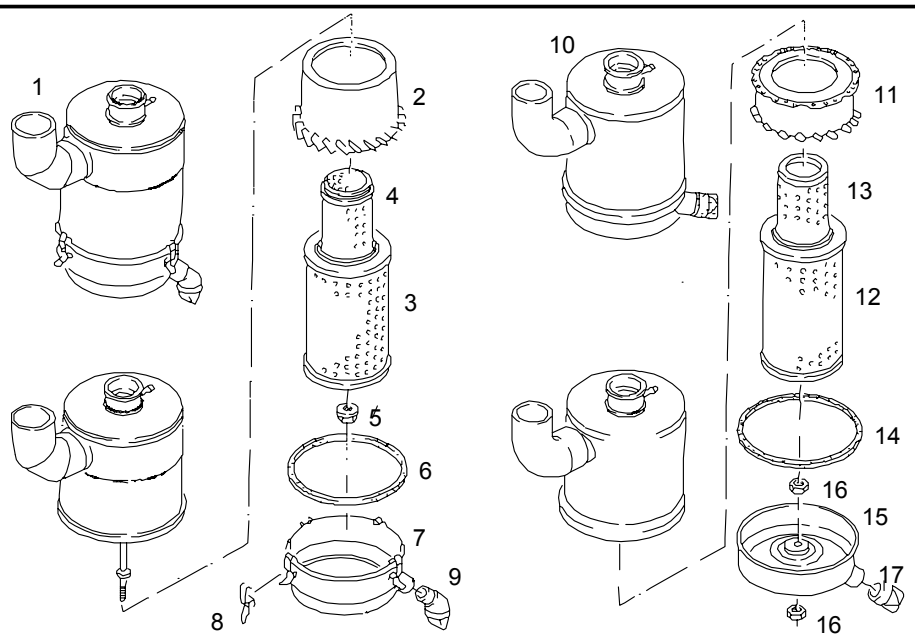

				ME	All	Stk
1	81.08401-6217	air cleaner		0		1
		make: mann & hummel version				*
2	81.08401-0020	>diffuser		0		1
3	81.08304-0038	>air filter element >dry air cleaner		0		1
4	81.08405-0013	>filter element >air cleaner		0		NB
		>optional version >if required >for subsequent installation				*
5	82.90640-0000	>hex collar nut >with seal >M10-11-8-SW17/KST-A3C		0		1
6	81.08903-0087	>gasket >asbestos-free		0		1

28.12.2003	A51 00	04.92		080-0	08 0322
20:48	air cleaner		81.#02C0-0310 00.00 - 00.00 intake system EURO 3		
Seite: 002					

				ME	All	Stk
7	81.08303-6047	>filter housing >assembly		0		1
8	81.41860-0040	>>lock		0		5
9	81.08312-0006	>dust ejector valve		0		1
		optional				*
10	81.08401-6219	air cleaner		0		1
		>make: >knecht version				*
11	81.08401-0019	>diffuser		0		1
12	81.08304-0038	>air filter element >dry air cleaner		0		1
13	81.08405-0011	>filter element >air cleaner		0		NB
	06.11271-6407	>>hexagon nut >>BM16X1,5-04-MAN183-B1		0		1
		>>optional version				*
14	81.08903-0084	>gasket >ELASTOMER 55+-5 SHORE >asbestos-free		0		1
15	81.08303-0049	>filter housing		0		1
16	81.90685-0092	>hexagon nut >M10-8,5-6/PA11-PHR		0		2
17	81.08312-0003	>dust ejector valve		0		1

28.12.2003	A51 00	04.92		080-0	08 0323
20:51	mounting parts for air cleaner		81.#02C0-0303 00.00 - 00.00 intake system upswept D2866 LOH25/26		
Seite: 001					

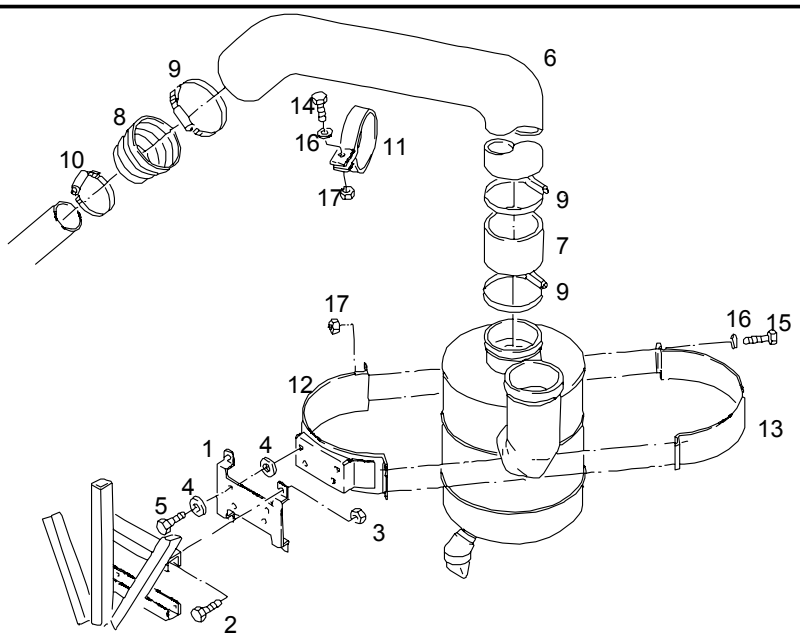

				ME	All	Stk
1	81.08340-0129	bracket		0		1
2	06.01283-5215	hex bolt M10X25-8.8-MAN183-B1		0		4
3	06.11240-0406	hex lock nut BM10-8-MAN183-B1		0		4
4	81.96210-0244	rubber pad		0		8
5	06.01283-5220	hex bolt M10X45-8.8-MAN183-B1		0		4
6	81.08201-5671	in take pipe assembly		0		1
7	81.96320-0088	hose 152X5X60-M3055-2		0		1
8	51.96420-0112	corrugated hose 150X120X255-M3055-2A		0		1

28.12.2003	A51 00	04.92		080-0	08 0323
20:51	mounting parts for air cleaner		81.#02C0-0303 00.00 - 00.00 intake system upswept D2866 LOH25/26		
Seite: 002					

				ME	All	Stk
9	06.67124-0346	hose clamp AS161-180-W4		0		3
10	06.67124-0341	hose clamp AS121-140-W4		0		1
11	81.97401-0744	clamp A150X40X117-11-ST37-2		0		1
12	81.08340-5191	bracket assembly		0		1
13	81.08340-0093	clamp		0		1
14	06.01283-5217	hex bolt M10X30-8.8-MAN183-B1		0		1
15	06.01283-5215	hex bolt M10X25-8.8-MAN183-B1		0		2
16	06.15013-0412	washer A10,5X20X2-200HV-MAN183-B1		0		3
17	06.11240-0406	hex lock nut BM10-8-MAN183-B1		0		3

28.12.2003	A51 00	04.92		080-0	08 0597
20:56	mounting parts for air cleaner		81.#02C0-0310 00.00 - 00.00 intake system EURO 3		
Seite: 001					

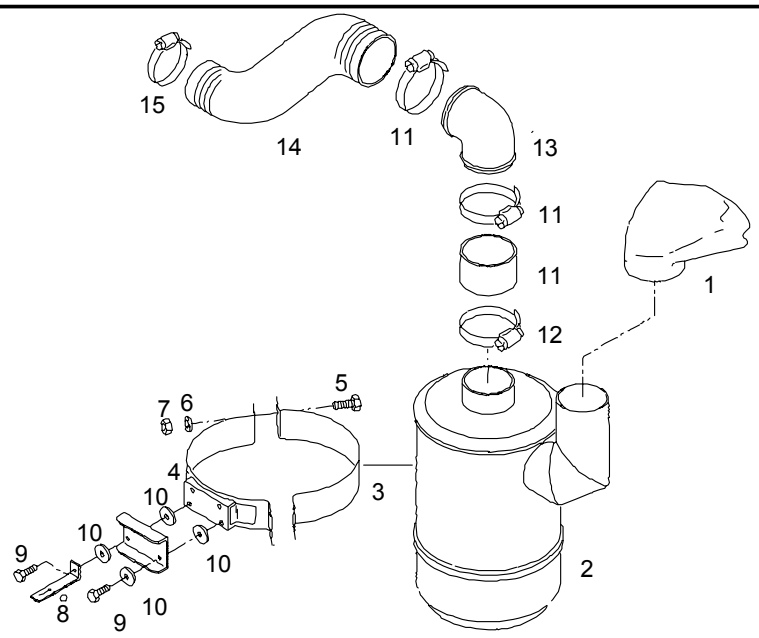

				ME	All	Stk
1		see plate: cap for dry-type air filter				*
2		see plate: air cleaner				*
3	81.08340-0093	clamp		0		1
4	81.08340-5191	bracket assembly		0		1
5	06.01283-5215	hex bolt M10X25-8.8-MAN183-B1		0		4
6	06.15013-0412	washer A10,5X20X2-200HV-MAN183-B1		0		4
7	06.11240-0406	hex lock nut BM10-8-MAN183-B1		0		4
8	81.97488-0623	angle		0		1

28.12.2003	A51 00	04.92		080-0	08 0597	
20:56	mounting parts for air cleaner		81.#02C0-0310 00.00 - 00.00 intake system EURO 3			
Seite: 002						

				ME	All	Stk
9	06.01283-5215	hex bolt M10X25-8.8-MAN183-B1		0		4
10	81.96210-0244	rubber pad		0		8
11	06.67124-0346	hose clamp AS161-180-W4		0		1
12		deleted				*
13		deleted				*
14	81.96420-0503	corrugated hose 150X120X780-M3055-4-SW		0		1
15	06.67124-0341	hose clamp AS121-140-W4		0		1

28.12.2003	A51 00	04.92		080-0	08 0465
20:58	vacuum indicator		81.#02C0-0303 27.00 - 00.00 intake system upswept D2866 LOH25/26		
Seite: 001					

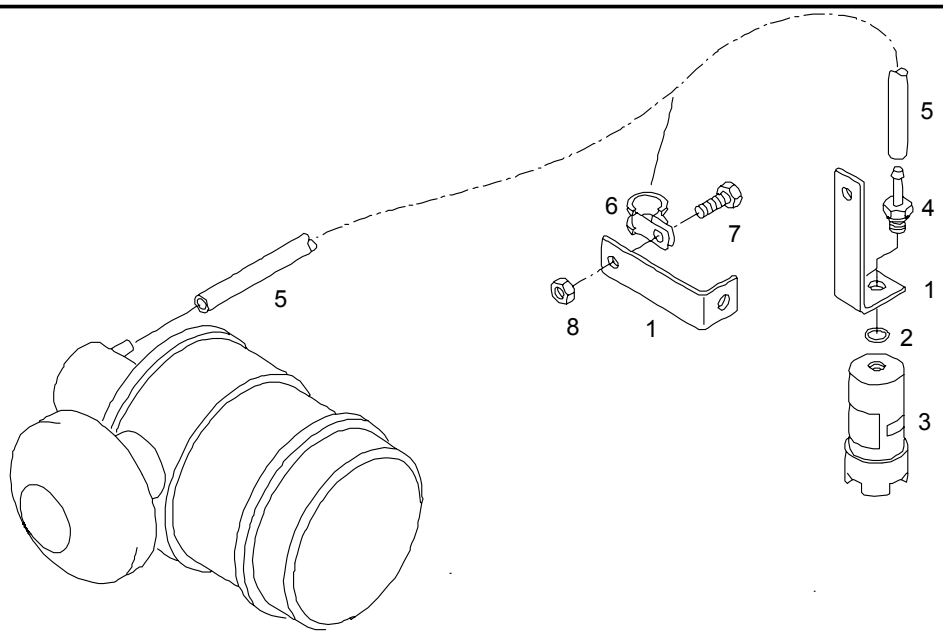

				ME	All	Stk
1		deleted				*
2	06.56936-0455	toric seal 9X2N-FPM1-70-GN		0		1
3	81.08309-6011	vacuum indicator		0		1
4	81.98131-0010	hose nipple 5-M10X1-ST-A2C		0		1
5	04.27134-4604	hose 4X1,5-MAN304CR2-60-SW		1		NB
		fig. 6-8 deleted				*

up to 2004' 06.15

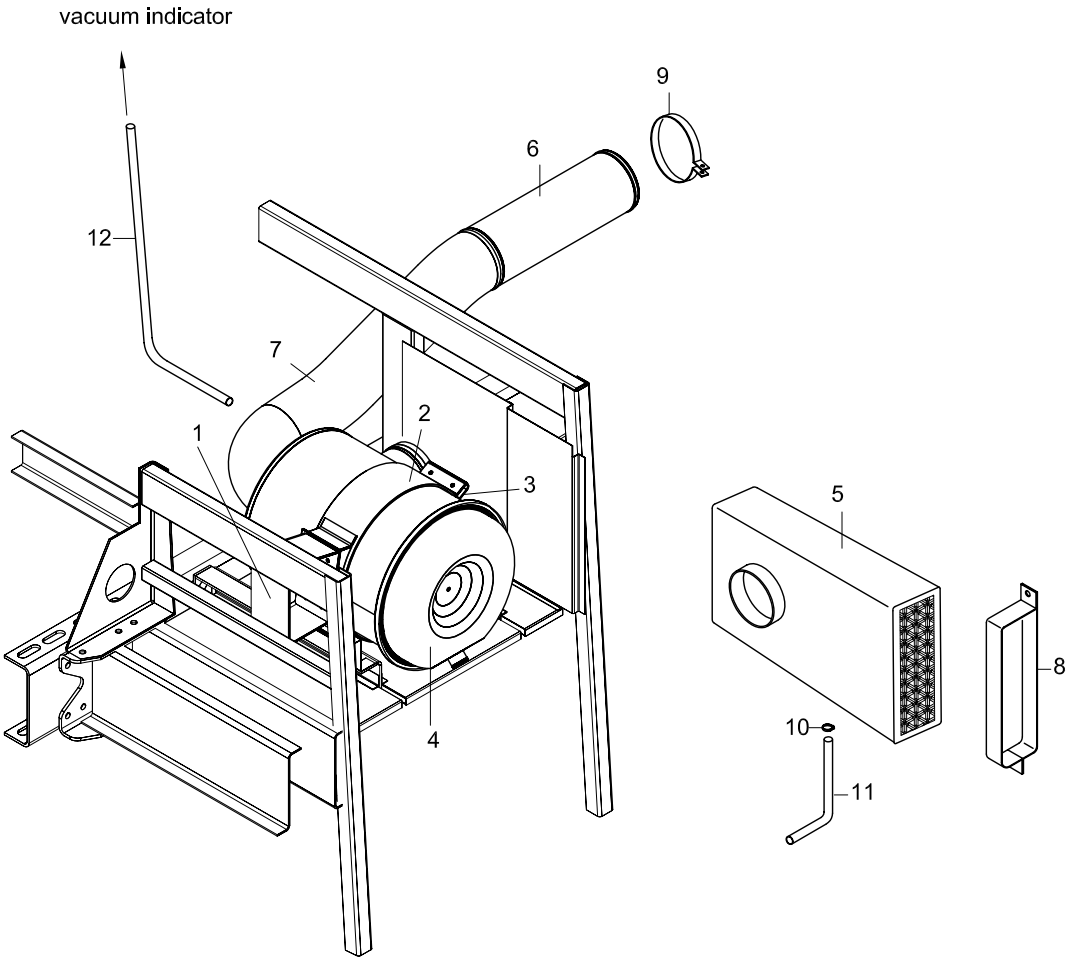

after 2004' 06.15

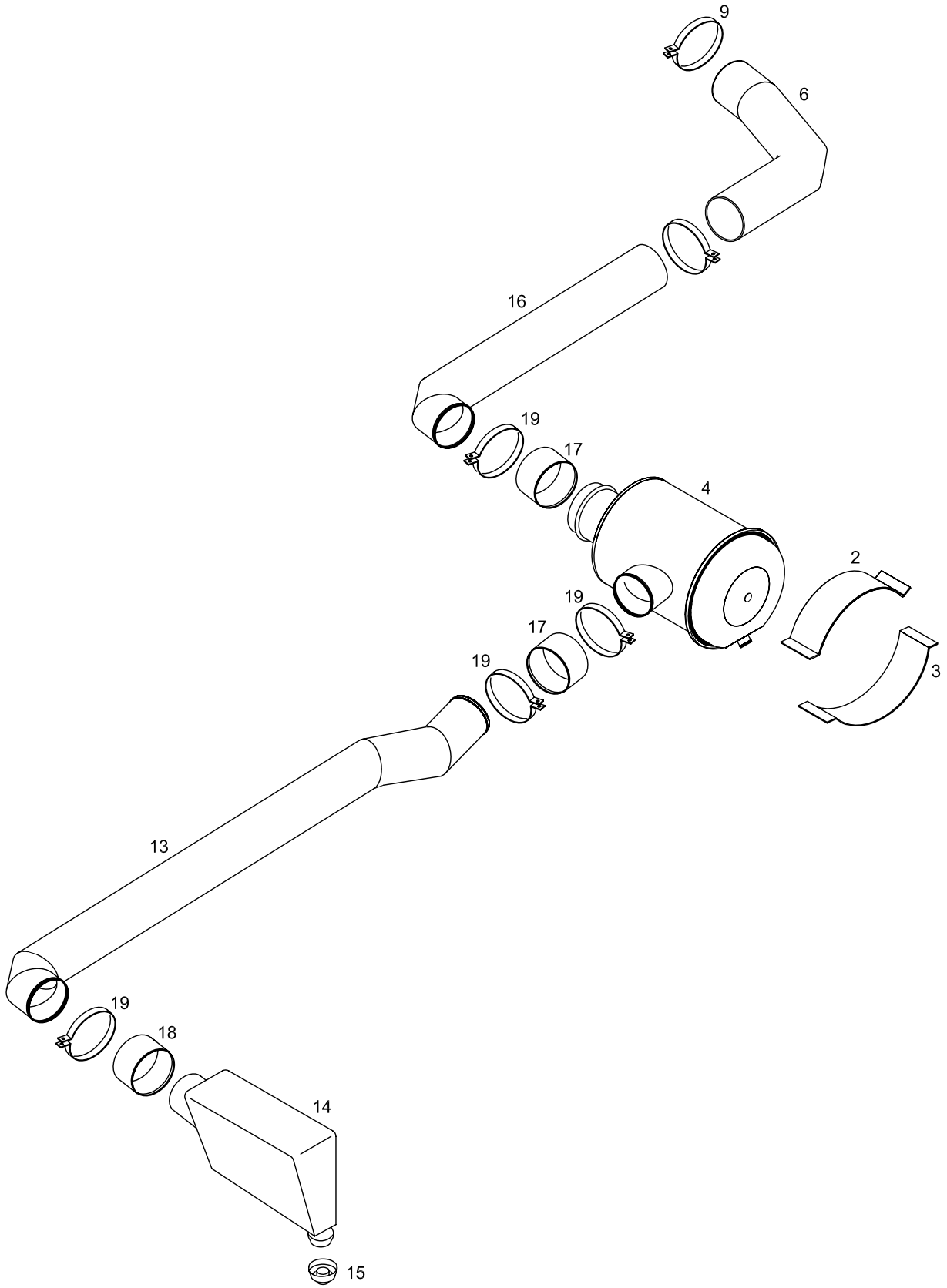

TEMSA	Hava temizleyici Air cleaner	Drw.no: TK188055-51 - 52 Vehicle Model: **TB162W, TB162Z, TB162X, TB162Y** **TB163W, TB163Z, TB163X, TB163Y**	**03-020** RevDate: Page: 1

Pos	Part Number	Turkish	English	German	Qty	R/P	From	Up To	Original Number Supplier
1	TK188055-104CY	BRAKET	BRACKET		1		1	150604	
2	TK188055-107Y	ÜST KELEPÇE	CLAMP - UPPER		1		1		
3	TK188055-106Y	ALT KELEPÇE	CLAMP - LOWER		1		1		
4	81.08401-6217	HAVA TEMİZLEYİCİ	AIR CLEANER		1		1		MAN
5	TK188055-221Y	HAVA EMİŞ KUTUSU	AIR INTAKE DUCT		1		1	150604	
6	81.96420-0503	HORTUM	HOSE		1		1	150604	MAN
7	TC298822-225Y	ÇIKIŞ BORUSU	EXHAUST PIPE		1		1	150604	
8	TK188055-125Y	KELEPÇE	CLAMP		1		1	150604	
9	06.67128-6341	KELEPÇE	CLAMP		1		1		MAN
10	TS660100Y	KELEPÇE	CLAMP		1		1	150604	
11	TM153040Y	POLYAMID HORTUM	POLYAMIDE HOSE		AR		1	150604	
12	04.27134-4604	HORTUM d.4	HOSE d.4		1		1	150604	MAN
13	TK188055-12Y	EMİŞ BORUSU	PIPE INLET		1		150604		
14	TK188055-13Y	HAVA EMİŞ KUTUSU	AIR INTAKE DUCT		1		150604		
15	81.08312-0003	TOZ LASTİĞİ	DUST COVER		1		150604		MAN
16	TC298822-223Y	ÇIKIŞ BORUSU	EXHAUST PIPE		1		150604		
17	TK188055-108Y	HORTUM	HOSE		2		150604		D=150
18	TK188055-14Y	HORTUM	HOSE		1		150604		D=180*100
19	TK304170Y	KELEPÇE	CLAMP		6		150604		170-190

04 ALTERNATOR
ALTERNATOR
x

04-010	Alternator Alternator x	TB162W TB163W	TB162Z TB163Z	TB162X TB163X	TB162Y TB163Y

TEMSA	Alternator Alternator	Group No : 04-010 Draw. Num. : x Rev. Date : Page : 1
	Vehicle Model: TB162W, TB162Z, TB162X, TB162Y, TB163W, TB163Z, TB163X, TB163Y	

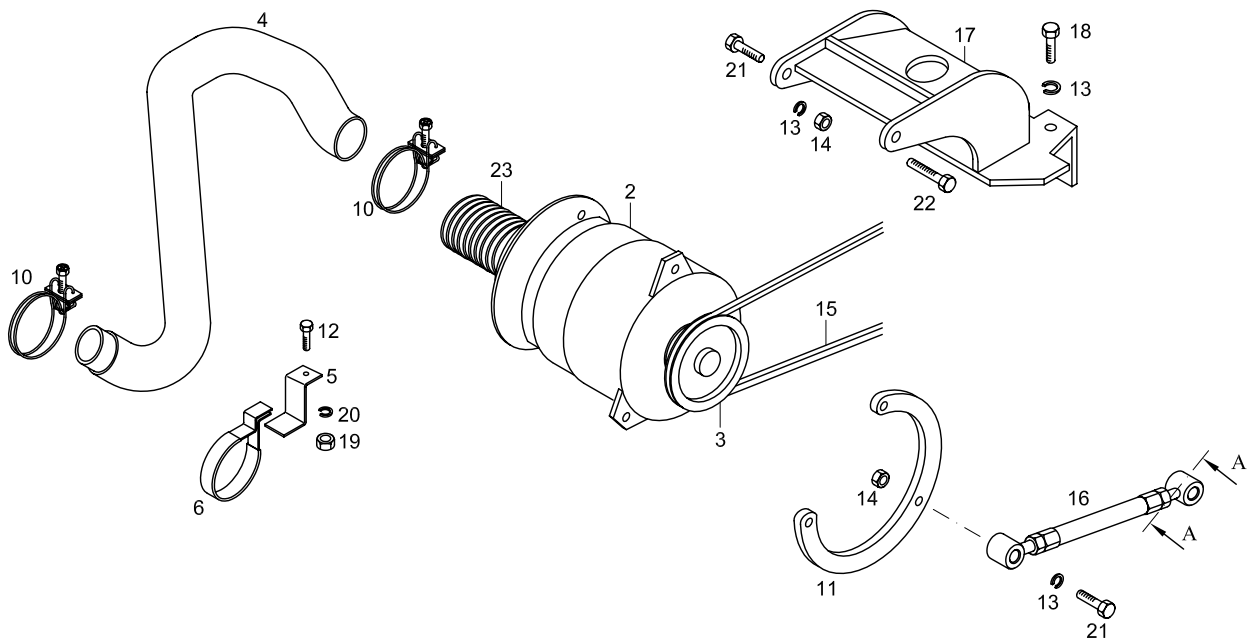

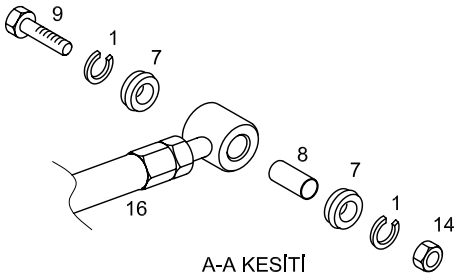

A-A KESİTİ
SECTION A-A

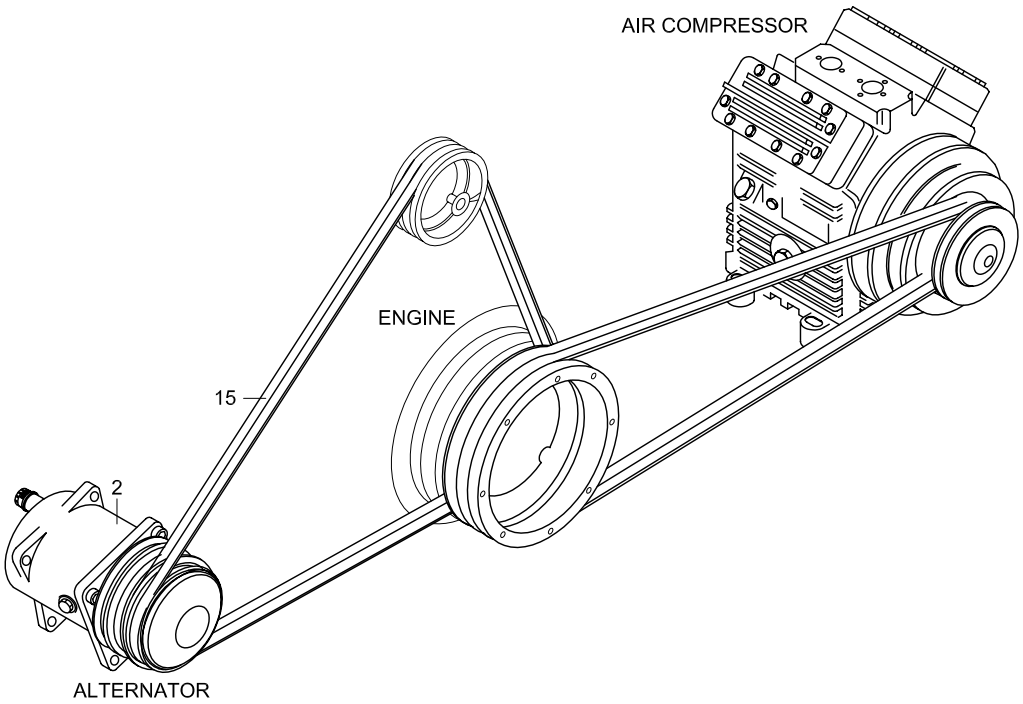

Alternator - Additional

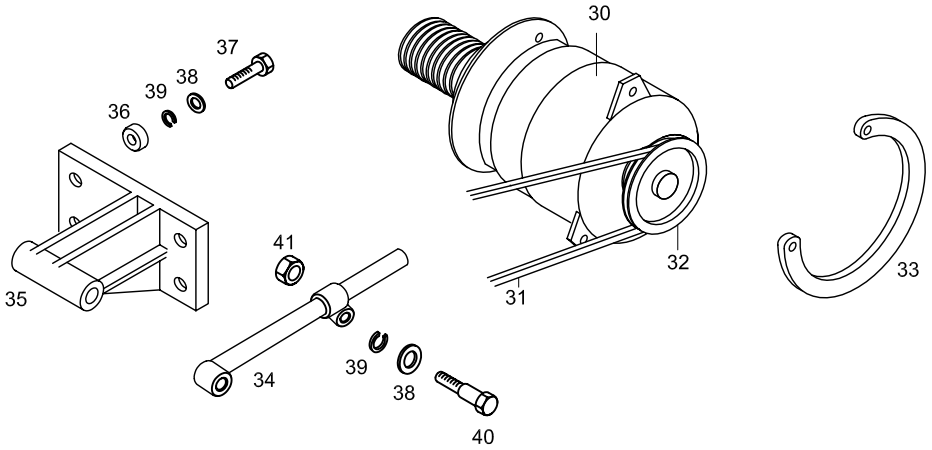

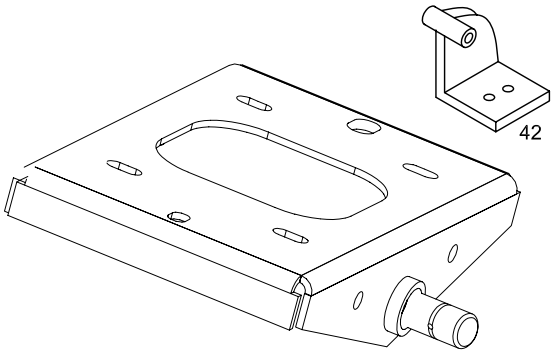

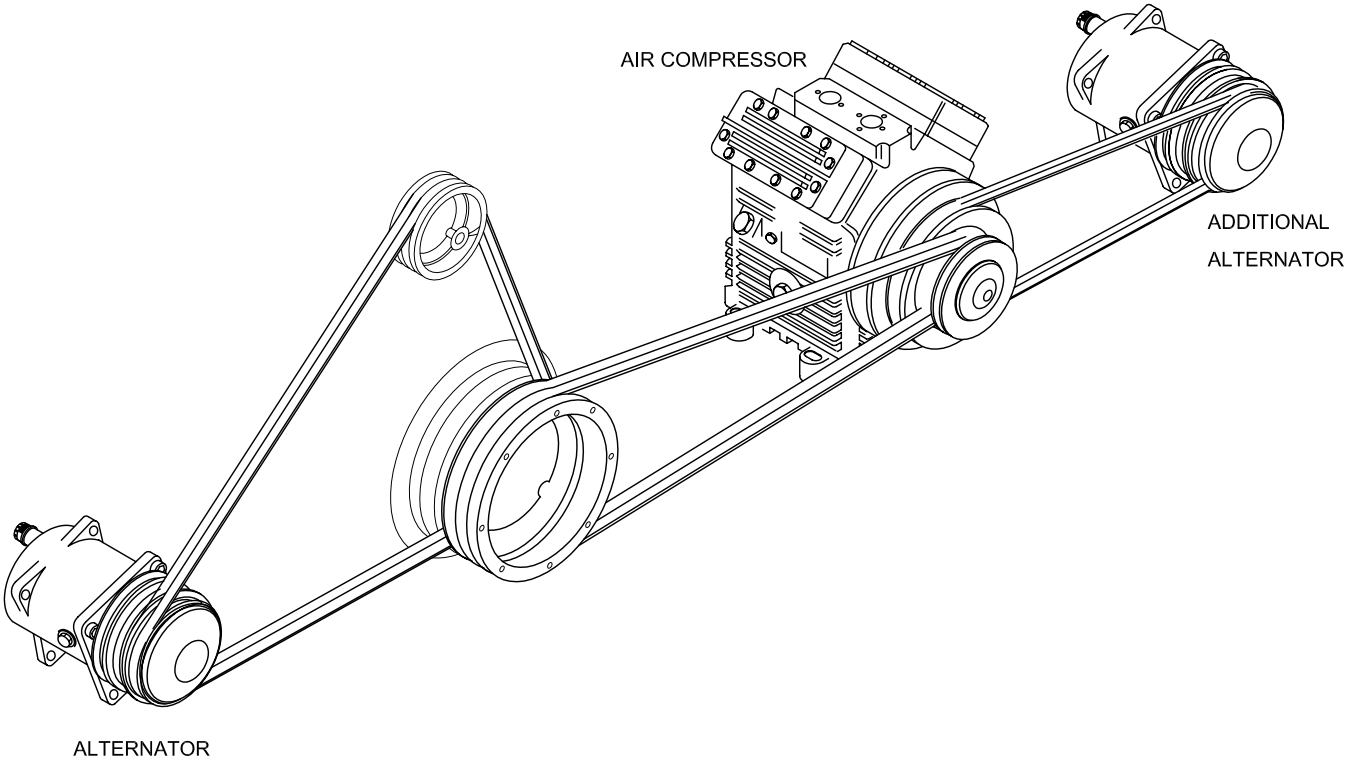

TEMSA	Alternatör Alternatör	Drw.no: 61504-90040-70/90016-71/62309-96127-71 Vehicle Model: **TB162W, TB162Z, TB162X, TB162Y** **TB163W, TB163Z, TB163X, TB163Y**	**04-010** RevDate: Page: 1

Pos	Part Number	Turkish	English	German	Qty	R/P	From	Up To	Original Number Supplier
1	MF450407Y	RONDELA	WASHER SPRING		AR		1		A12
2	81.26101-6084	ALTERNATÖR	ALTERNATOR		1		1	150604 2004	MAN
2	81.26101-6086	ALTERNATÖR	ALTERNATOR		1		150604 2004		MAN
3	81.95820-0267	KASNAK 2 KANALLI	PULLEY 2-GROOVE		1		1		MAN
3	51.26105-0230	KASNAK 3 KANALLI	PULLEY 3-GROOVE		1		1		MAN
4	61504-90030-32Y	HORTUM	HOSE		1		1		
5	61504-90030-27Y	PLAKA	PLATE		1		1		
6	TM161259Y	KLİP	CLIP		1		1		
7	61504-90016-35Y	LASTİK BURÇ	RUBBER BUSHING		2		1		
8	61504-90016-32Y	BURÇ	BUSHING		1		1		
9	TF106122Y	CIVATA	BOLT		AR		1		M12*1.5*70
10	MF661039	KELEPÇE	CLAMP		2		1		
11	61504-90018-18Y	ALTERNATÖR GERGİ BRAKETİ	BRC ADJUSTING ALTERNATOR		1		1		
12	MF100029Y	CIVATA	BOLT		AR		1		M6*20
13	MF450407Y	RONDELA	WASHER SPRING		AR		1		A12
14	TF445282Y	KİLİTLİ SOMUN	NUT JAM		5		1		M12*1.25
15	61504-90016-30Y	V-KAYIŞ	V-BELT		3		1		
16	61504-90016-31Y	GERGİ KOMPLE	ADJUSTING ASSY		1		1		
17	61504-90016-01Y	ALTERNATOR BRAKETI	BRACKET ALTERNATOR		1		1		
18	MF101312Y	CIVATA	BOLT		3		1		M12*1.25*30
19	MF430004Y	SOMUN	NUT		AR		1		M6
20	MF450404Y	RONDELA	WASHER SPRING		AR		1		A6
21	TF103220Y	CIVATA	BOLT		AR		1		M12*1.5*60
22	TF106122Y	CIVATA	BOLT		AR		1		M12*1.5*70
23	61504-90030-39Y	ALTERNATÖR KAPAĞI	COVER ALTERNATOR		1		1		
30	0123525501	ALTERNATÖR	ALTERNATOR		1		1		BOSCH 100A
31	62309-96127-50Y	V- KAYIŞ	V-BELT		1		1		for 62309-90020-08 XPA 17x875 Li
31	62309-96127-51Y	V- KAYIŞ	V-BELT		1		1		for 62309-90020-09 XPA 17x825 Li
32	62309-96127-48Y	KASNAK	PULLEY		1		1		
33	62309-96127-04Y	ALTERNATÖR GERGİ BRAKETİ	BRC ADJUSTING ALTERNATOR		1		1		
34	62309-96127-10Y	GERGİ KOMPLE	ADJUSTING ASSY		1		1		
35	62309-96127-08Y	ALTERNATÖR GERGİ BRAKETİ	BRC ADJUSTING ALTERNATOR		1		1		
36	62309-70239-01Y	BURÇ	BUSHING		4		1		
37	MF100116Y	CIVATA M12*1.25*40	BOLT M12*1.25*40		1		1		
38	MF450007Y	PUL	WASHER PLAIN		AR		1		

TEMSA	Alternatör Alternatör	Drw.no: 61504-90040-71/90016-7162309-96127-71 Vehicle Model: **TB162W, TB162Z, TB162X, TB162Y** **TB163W, TB163Z, TB163X, TB163Y**	**04-010** RevDate: Page: 2

Pos	Part Number	Turkish	English	German	Qty	R/P	From	Up To	Original Number Supplier
39	MF450407Y	RONDELA	WASHER SPRING		AR		1		
40	MF101318Y	CIVATA M12*1.25*50	BOLT M12*1.25*50		3		1		
41	MF430007Y	SOMUN M12	NUT 12		3		1		
42	62309-96127-03Y	BRAKET	MOUNTING BRACKET		1		1		
43	51.26105-0230	KASNAK	PULLEY		1		1		MAN

05 FAN TAHRİKİ
FAN DRIVE
x

05-010	Hidrostatik fan tahriki Hydrostatic fan drive x	TB162W	TB162Z	TB162X	TB162Y
05-011	Hidrostatik fan tahriki Hydrostatic fan drive x	TB163W	TB163Z	TB163X	TB163Y

TEMSA	Hidrostatik fan tahriki Hydrostatic fan drive	Group No : 05-010 Draw. Num. : x Rev. Date : Page : 1
	Vehicle Model: TB162W, TB162Z, TB162X, TB162Y,	

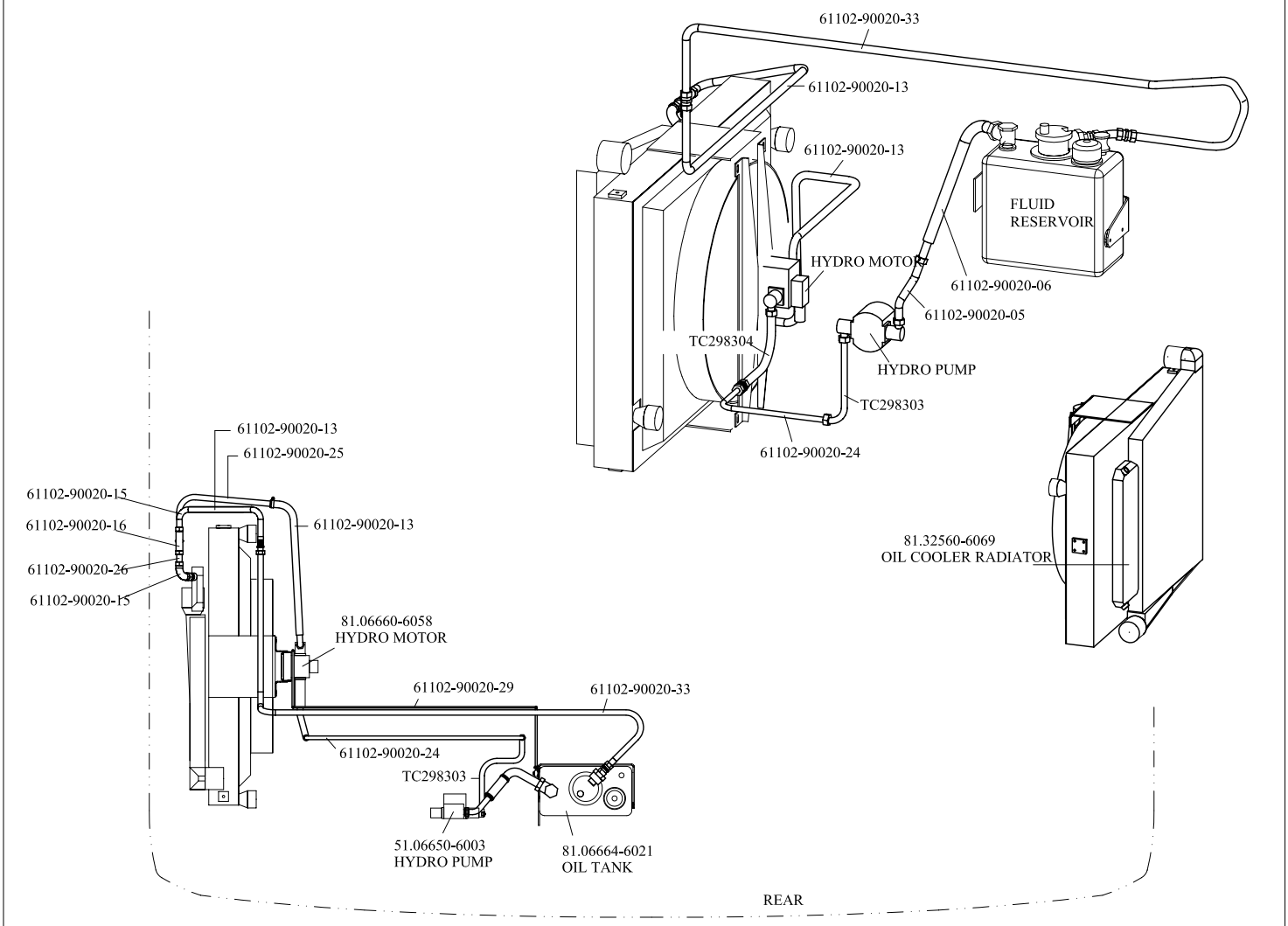

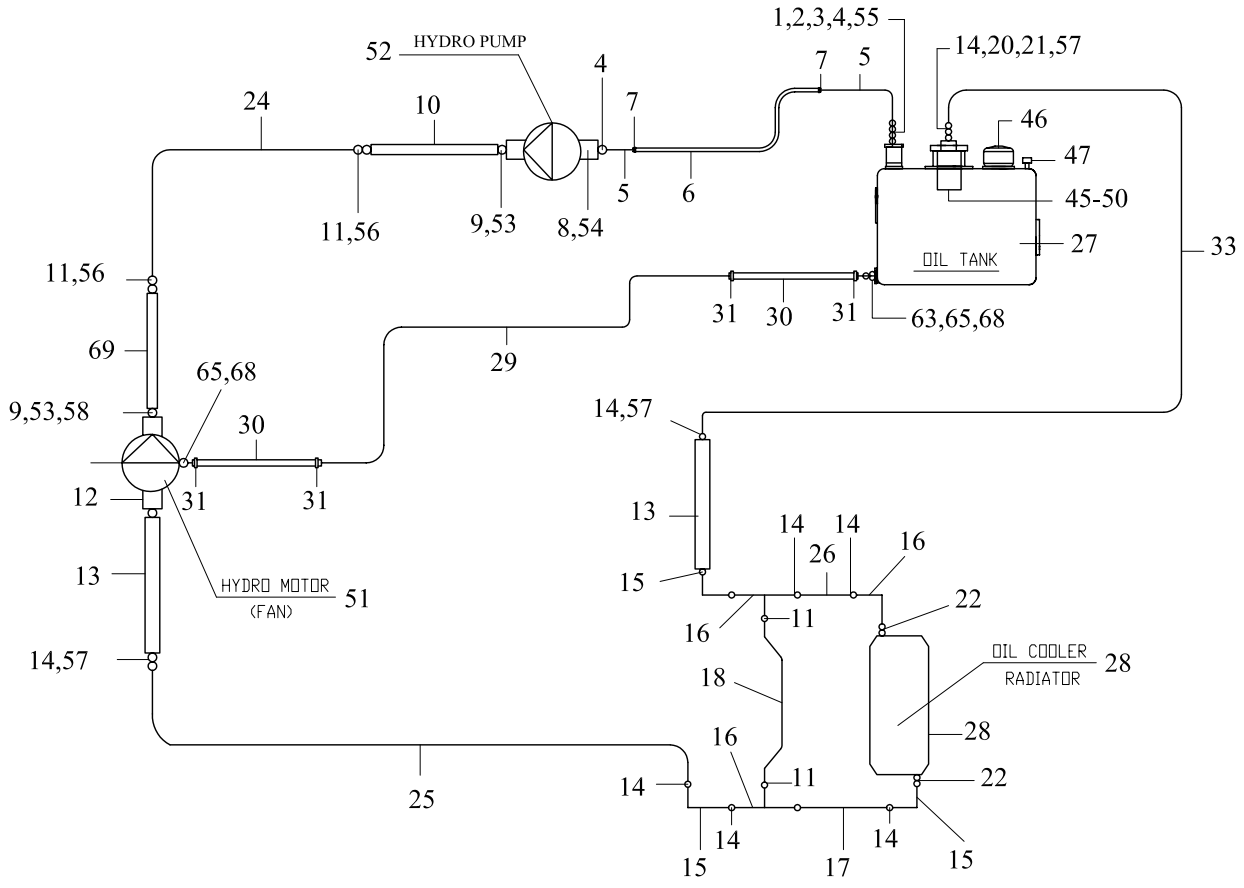

TEMSA	Hidrostatik fan tahriki Hydrostatic fan drive	Drw.no: 61102-90000-80 Vehicle Model: 360ps TB162W, TB162Z, TB162X, TB162Y	05-010 RevDate: Page: 1

Pos	Part Number	Turkish	English	German	Qty	R/P	From	Up To	Original Number Supplier
1	81.98130-0473	NİPEL	NIPPLE		1		1		MAN
2	06.56190-0736	CONTA	O-RING		1		1		MAN
3	61102-90020-03	DİRSEK	JOINT		1		1		01 58 38 20 07 VOSS
4	61102-90020-04	RAKOR	CONNECTOR		2		1		00 04 35 21 00 VOSS
5	61102-90020-05AY	ÇELİK BORU	STEEL PIPE		2		1		
6	61102-90020-06Y	HORTUM	HOSE		1		1		
7	06.67128-6315	KELEPÇE	CLAMP		2		1		MAN
8	61102-90020-76	KONNEKTÖR	CONNECTOR		1		1		
9	61102-90020-77	KONNEKTÖR	CONNECTOR		2		1		
10	TC298303AY	HORTUM	HOSE		2		1		
11	61102-90020-11	RAKOR	CONNECTOR		4		1		00 04 20 21 00 VOSS
12	81.98112-0108	FLANŞ	FLANGE		1		1		
13	61102-90020-13	HORTUM	HOSE		2		1		
14	61102-90020-14	RAKOR	UNION NUT		10		1		00 04 30 21 00 VOSS
15	61102-90020-15	DİRSEK	JOINT		4		1		01 58 33 20 07 VOSS
16	61102-90020-16	T-KONNEKTÖR	T-CONNETCTOR		2		1		07 34 32 20 00 VOSS
17	61102-90020-17	ÇELİK BORU	STEEL PIPE		1		1		
18	61102-90020-18	ÇELİK BORU	STEEL PIPE		1		1		
20	61102-90020-20	CONTA	O-RING		1		1		
21	61102-90020-21	NİPEL	STRAIGHT MALE STUD		1		1		17 84 71 20 00 VOSS
22	81.98130-0398	NİPEL	NIPPLE		2		1		
23	61102-90020-23	CONTA	O-RING		2		1		
24	61102-90020-24	ÇELİK BORU	STEEL PIPE		1		1		
25	61102-90020-25	ÇELİK BORU	STEEL PIPE		1		1		
26	61102-90020-26	ÇELİK BORU	PIPE		1		1		
27	81.06664-6021	YAĞ TANKI	OIL TANK		1		1		MAN
28	81.32560-6069	YAĞ SOĞUTMA RADYATÖRÜ	OIL COOLER RADIATOR		1		1		MAN
29	61102-90020-29	ÇELİK BORU	STEEL PIPE		1		1		
30	61102-90020-31	HORTUM	HOSE		1		1		
31	TS660100	KELEPÇE	CLAMP		4		1		
32	06.78200-0813	KONNEKTÖR	CONNECTOR		2		1		MAN
33	61102-90020-33	ÇELİK BORU	STEEL PIPE		1		1		
45	81.06668-0006	FİLTRE	FILTER		1		1		MAN
46	81.06670-6003	KAPAK	CAP		1		1		MAN
47	81.47303-0039	YAĞ SEVİYE ÇUBUĞU	GAUGE OIL		1		1		MAN

TEMSA	Hidrostatik fan tahriki Hydrostatic fan drive	Drw.no: 61102-90000-80 Vehicle Model: 360ps **TB162W, TB162Z, TB162X, TB162Y**	**05-010** RevDate: Page: 2

Pos	Part Number	Turkish	English	German	Qty	R/P	From	Up To	Original Number Supplier
50	81.06670-6002	FİLTRE KABI	CASE FILTER		1		1		MAN
51	81.06660-6058	HİDROLİK MOTOR	HYDRO MOTOR		1		1		MAN
52	51.06650-6003	HİDROLİK POMPA	HYDRO PUMP		1		1		MAN
53	61102-90020-79	CONTA	O-RING		2		1		
54	61102-90020-80	CONTA	O-RING		2		1		
55	61102-90020-55	İÇ YÜZÜK	CUTTING RING		2		1		00 10 35 20 00 VOSS
56	61102-90020-56	İÇ YÜZÜK	CUTTING RING		4		1		00 10 20 20 00 VOSS
57	61102-90020-57	İÇ YÜZÜK	CUTTING RING		10		1		00 10 30 20 00 VOSS
58	06.16160-2104	SEGMAN	RING SNAP		1		1		
63	61102-90020-63Y	KONNEKTÖR	CONNECTOR		1		1		
65	61102-90020-65Y	CIVATA	BOLT		2		1		
68	61102-90020-68Y	PUL	WASHER		4		1		
69	TC298304AY	HORTUM	HOSE		1		1		

18.12.2003	Type A51 00	Pet 04.92	Chassis No.	Group 061-0	Figure 06 0945
17:37	Table union for oil cooler		Reference No. 88.#0270-0009 00.00 - 00.00 cooling system D2866 LOH29 EURO3		
Seite: 001					

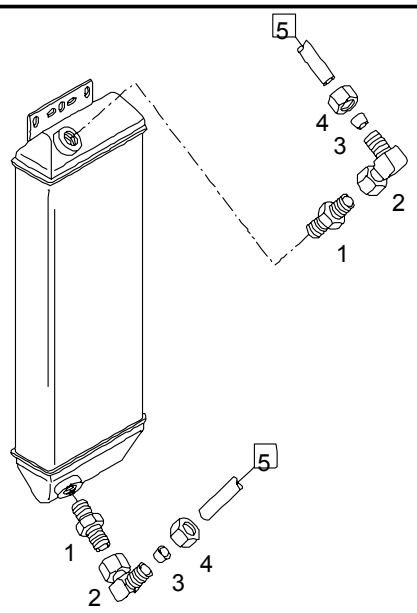

Pos	Part No.	Description	Pat	ME	All	Stk
1	81.98130-0398	straight union L22-M22X1,5A-A4C		0		2
2	06.71230-2107	elbow union L22-A4C		0		2
3	06.71020-0211	grip ring AL22-ST-A3C		0		2
4	06.71030-4117	union nut AL22-FLPST-MAN183-B1		0		2
5		see plate: wiring diagram for fan drive				*

18.12.2003	Type A51 00	Pet 04.92	Chassis No.	Group 061-0	Figure 06 0939
17:31	Table fan drive and bearings		Reference No. 88.#0270-0009 00.00 - 00.00 cooling system D2866 LOH29 EURO3		
Seite: 001					

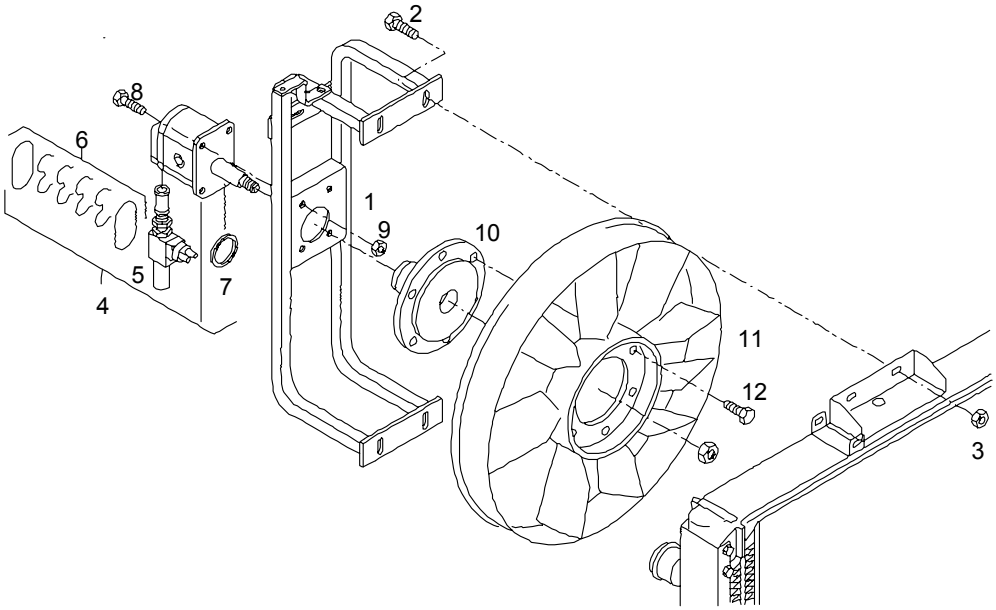

Pos	Part No.	Description	Pat	ME	All	Stk
1	81.06640-5349	carrier assembly		0		1
2	06.02813-4408	hex lock screw M10X20-10.9-MAN183-B1		0		4
3	06.11251-2001	hex lock nut M10-10-MAN183-B1		0		4
4	81.06660-6058	hydraulic motor		0		1
5	81.25902-6228	>solenoid valve		0		1
7		>>only for >>hydraulic motor >>81.06660-6054	0100			*
7	81.96503-0315	>radial shaft seal >17X30X7		0		1
8	06.01283-5115	hex bolt M8X25-8.8-MAN183-B1		0		4

18.12.2003	Type A51 00	Pet 04.92	Chassis No.	Group 061-0	Figure 06 0939
17:31	Table fan drive and bearings		Reference No. 88.#0270-0009 00.00 - 00.00 cooling system D2866 LOH29 EURO3		
Seite: 002					

Pos	Part No.	Description	Pat	ME	All	Stk
9	06.11240-0404	hex lock nut BM8-8-MAN183-B1		0		4
10	81.06604-0036	flange		0		1
11	51.06601-0257	suction fan DMR 754		0		1
12	06.02813-4306	hex lock screw M8X16-10.9-MAN183-B1		0		6

18.12.2003	Type A51 00	Pet 04.92	Chassis No.	Group 061-0	Figure 06 0801
17:31	Table fluid reservoir		Reference No. 88.#0270-0009 00.00 - 00.00 cooling system D2866 LOH29 EURO3		
Seite: 001					

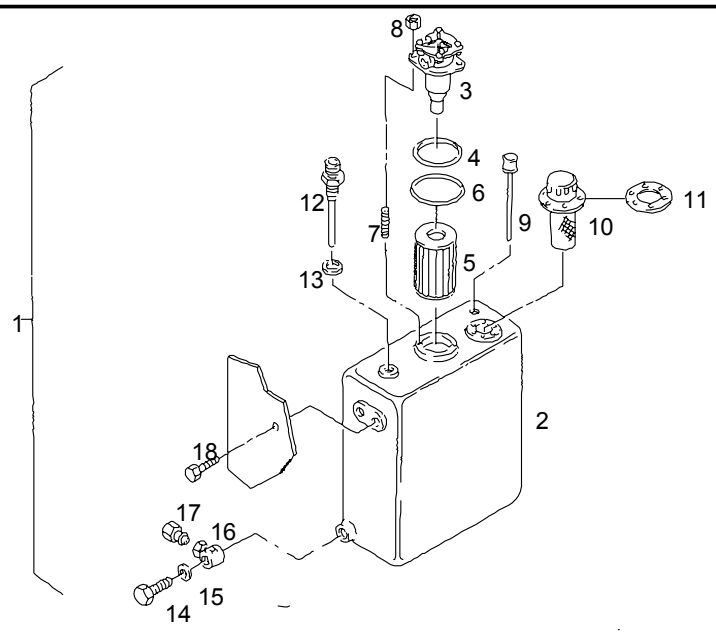

Pos	Part No.	Description	Pat	ME	All	Stk
1	81.06664-6024	fluid reservoir assembly		0		1
		compl.set no longer available replaced by: components				*
2	81.06664-6021	>fluid reservoir		0		1
	81.97811-0985	>instruction plate		0		1
3	81.06670-6002	>return filter		0		1
4	06.56930-2985	>>toric seal >>85,09X5,33N-NBR3-70		0		1
5	81.06668-0006	>>hydr. fluid filter element >>with gasket		0		1
6	06.56930-3084	>>toric seal >>90X6N-NBR3-70		0		1

18.12.2003	Type A51 00	Pet 04.92	Chassis No.	Group 061-0	Figure 06 0801
17:31	Table fluid reservoir		Reference No. 88.#0270-0009 00.00 - 00.00 cooling system D2866 LOH29 EURO3		
Seite: 002					

Pos	Part No.	Description	Pat	ME	All	Stk
7	06.06225-8704	>stud >M8X20-8.8-A2C		0		2
8	06.11240-0404	>hex lock nut >BM8-8-MAN183-B1		0		2
9	81.47303-0045	>oil dipstick		0		1
10	81.06670-6003	>vent filter		0		1
11	81.96503-0343	>>flat gasket		0		1
12	81.98130-0473	>straight threaded union		0		1
13	06.56190-0736	>seal >A33X39-CU >asbestos-free		0		1
14	06.08099-0019	>drain plug >AM22X1,5-ST-MAN183-B1	1000	0		1
15	06.56190-0718	>seal >A22X27-CU	1000	0		1
16	06.73599-0070	swivel union L15 M22X1,5		0		NB
17	81.90310-0479	plug L15		0		NB
18	06.02813-4307	hex lock screw M8X18-10.9-MAN183-B1		0		4

TEMSA	Hidrostatik fan tahriki Hydrostatic fan drive	Group No : 05-011 Draw. Num. : x Rev. Date :
	Vehicle Model: TB163W, TB163Z, TB163X, TB163Y	Page : 1

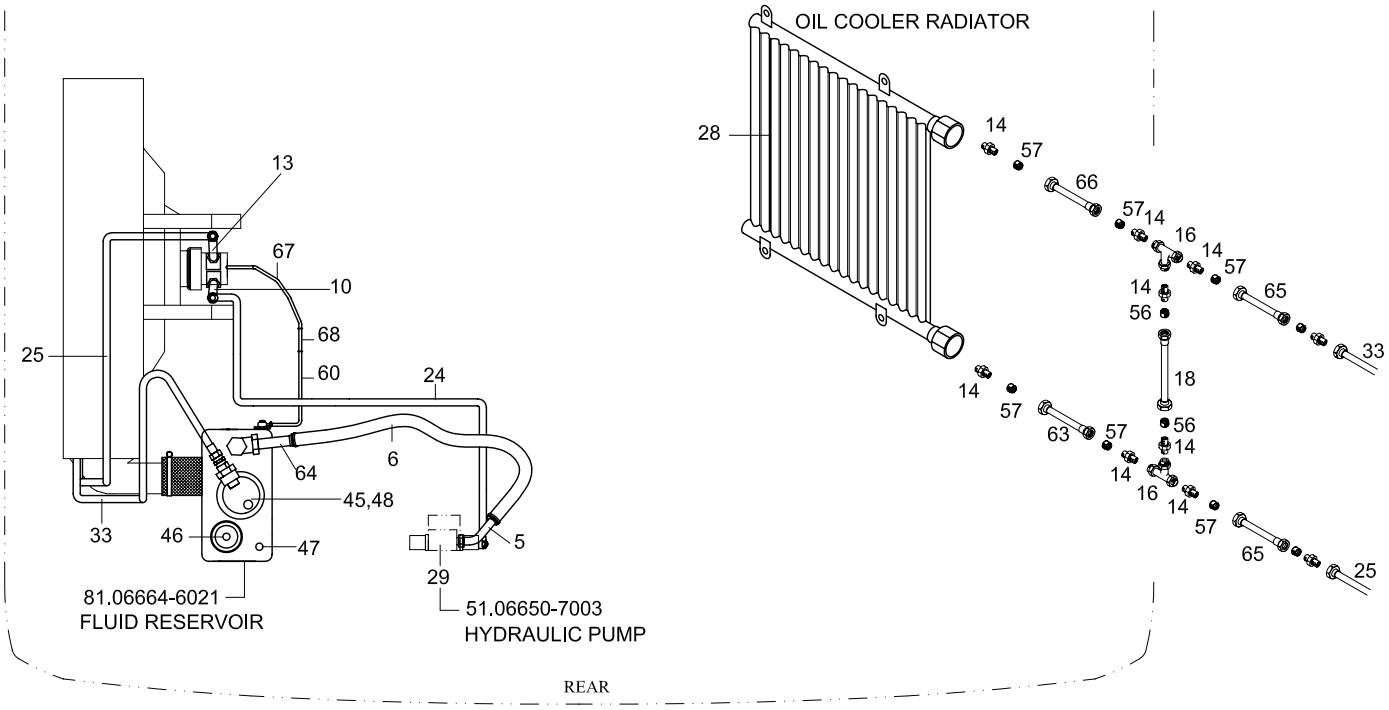

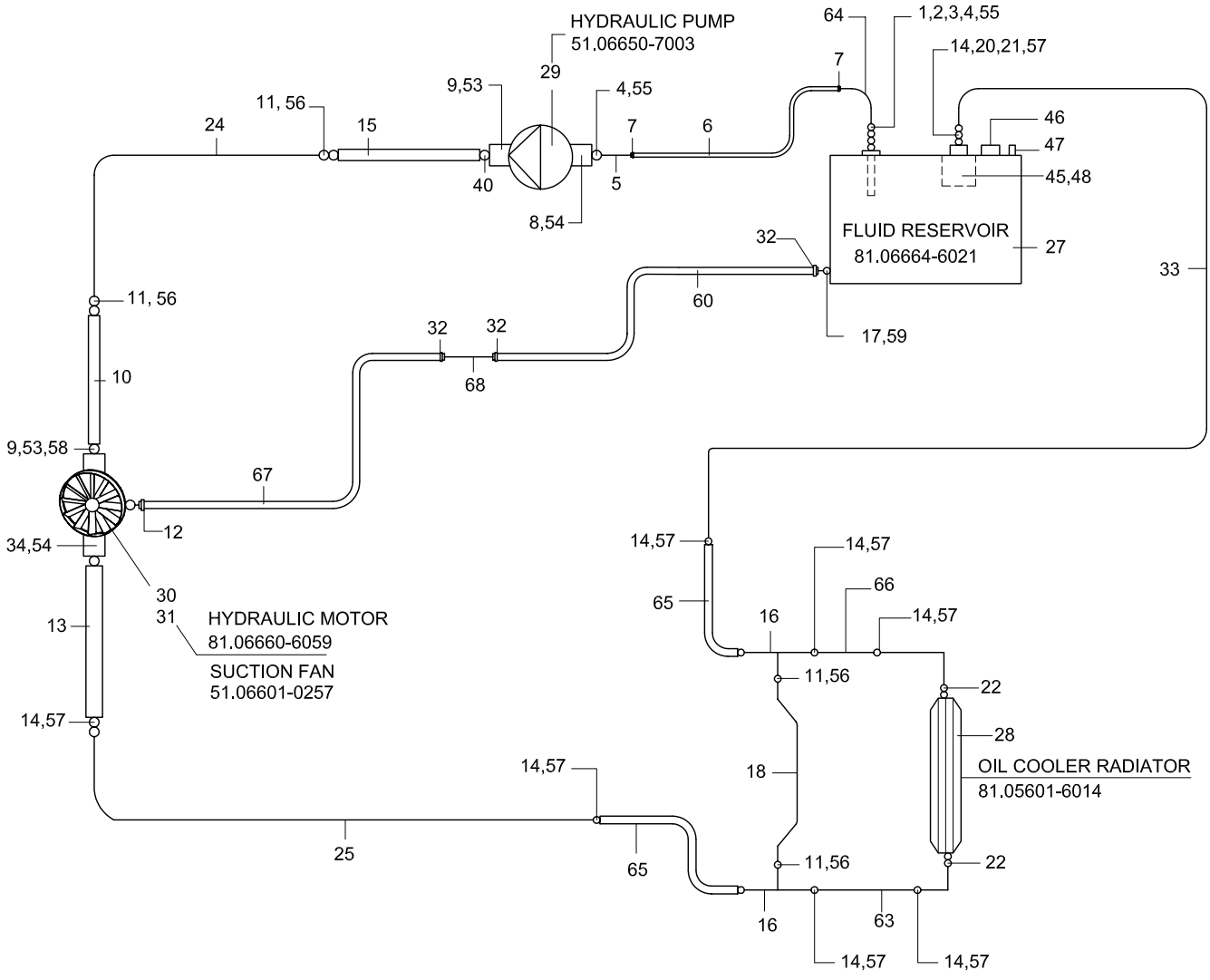

TEMSA	Hidrostatik fan tahriki Hydrostatic fan drive	Drw.no: TO267001 Vehicle Model: 410ps TB163W, TB163Z, TB163X, TB163Y	05-011 RevDate: Page: 1

Pos	Part Number	Turkish	English	German	Qty	R/P	From	Up To	Original Number Supplier
1	81.98130-0473	DÜZ KONNEKTÖR	STRAIGHT THTEADED UNION		1		1		MAN
2	06.56190-0736	CONTA	SEAL		1		1		MAN
3	61102-90020-03	DİRSEK M36*2	CONNECTOR M36*2		1		1		0158382007 VOSS
4	61102-90020-04	KONNEKTÖR M36*2	CONNECTOR M36*2		2		1		0004352100 VOSS
5	61102-90020-05AY	ÇELİK BORU	STEEL PIPE		1		1		D.28
6	61102-90020-06	HORTUM	HOSE		1		1		D.38
7	MF661018Y	KELEPÇE 32/50	CLAMP 32/50		4		1		
8	TO259103	KONNEKTÖR	CONNECTOR		1		1		
9	61102-90020-77	KONNEKTÖR	CONNECTOR		2		1		
10	TC298303AY	HORTUM	HOSE		1		1		
11	61102-90020-11	KONNEKTÖR	CONNECTOR		4		1		00044202100 VOSS
12	06.67128-0704	KELEPÇE	CLAMP		1		1		MAN
13	61102-90020-13	HORTUM	HOSE		1		1		
14	61102-90020-14	KONNEKTÖR M30*2	CONNECTOR M30*2		10		1		0004302100 VOSS
15	TC298304AY	HORTUM	HOSE		1		1		
16	61102-90020-16	T-KONNEKTÖR	T-CONNECTOR		2		1		073432000 VOSS
17	TC298806-03	CONTA	SEAL		2		1		
18	TO267117Y	ÇELİK BORU	STEEL PIPE		1		1		D.15 L:630
20	61102-90020-20	CONTA	SEAL		1		1		
21	61102-90020-21	NIPEL	NIPPLE		1		1		1784712000 VOSS
22	81.98130-0398	NIPEL	NIPPLE		2		1		MAN
24	TO267115Y	ÇELİK BORU	STEEL PIPE		1		1		D.15
25	TO267116Y	ÇELİK BORU	STEEL PIPE		1		1		D.22
27	81.06664-6021	YAĞ KARTERİ	FLUID RESERVOIR		1		1		MAN
28	81.05601-6014	YAĞ SOĞUTUCU	OIL COOLER RADIATOR		1		1		MAN
29	51.06650-7003	HİDROLİK POMPA	HYDRAULIC PUMP		1		1		MAN
30	81.06660-6059	HİDROLİK MOTOR	HYDRAULIC MOTOR		1		1		MAN
31	51.06601-0257	EMİCİ FAN	SUCTION FAN		1		1		MAN
32	TS660100Y	KELEPÇE	CLAMP		2		1		
33	TO267118Y	ÇELİK BORU	STEEL PIPE		1		1		D.22

TEMSA	Hidrostatik fan tahriki Hydrostatic fan drive	Drw.no: TO267001 Vehicle Model: 410ps TB163W, TB163Z, TB163X, TB163Y	05-011 RevDate: Page: 2

Pos	Part Number	Turkish	English	German	Qty	R/P	From	Up To	Original Number Supplier
34	61102-90000-74	KONNEKTÖR	CONNECTOR		1		1		
40	61102-90020-79	CONTA	SEAL		2		1		
45	81.06668-0006	FİLTRE ELEMENTİ	FILTER ELEMENT		1		1		MAN
46	81.06670-6003	HAVALANDIRMA FİLTRESİ	VENT FILTER		1		1		MAN
47	81.47303-0039	YAĞ ÇUBUĞU	OIL DIPSTICK		1		1		MAN
48	81.06670-6002	DÖNÜŞ FİLTRESİ	RETURN FILTER		1		1		MAN
53	61102-90020-80Y	CONTA	SEAL		1		1		
54	61102-90020-78	CONTA	SEAL		1		1		
55	61102-90020-55	İÇ YÜZÜK	GRIP RING		2		1		
56	06.71020-0309	İÇ YÜZÜK	GRIP RING		4		1		
57	06.71020-0211	İÇ YÜZÜK	GRIP RING		10		1		
58	06.16160-2104	SEGMAN	RING SNAP		4		1		
59	61102-90020-63	KONNEKTÖR	CONNECTOR		1		1		
60	61102-90020-31Y	HORTUM	HOSE		1		1		
63	TO267119Y	ÇELİK BORU	STEEL PIPE		2		1		
64	TO267120Y	ÇELİK BORU	STEEL PIPE		2		1		D.28
65	TO267124Y	HORTUM	HOSE		2		1		
66	TO267127Y	ÇELİK BORU	STEEL PIPE		1		1		
67	61102-90020-32Y	HORTUM	HOSE		1		1		
68	TO267133Y	ÇELİK BORU	STEEL PIPE		1		1		D.6

05.08.2004	Type A51 00	Pet 04.92	Chassis No.	Group 061-0	Figure 06 1275
12:49	Table fan drive and bearings		Reference No. 88.#0270-0015 00.00 - 00.00 cooling system D2866 LOH29/D2876 LOH02 (301/328KW; 410/460PS)		
Seite: 001					

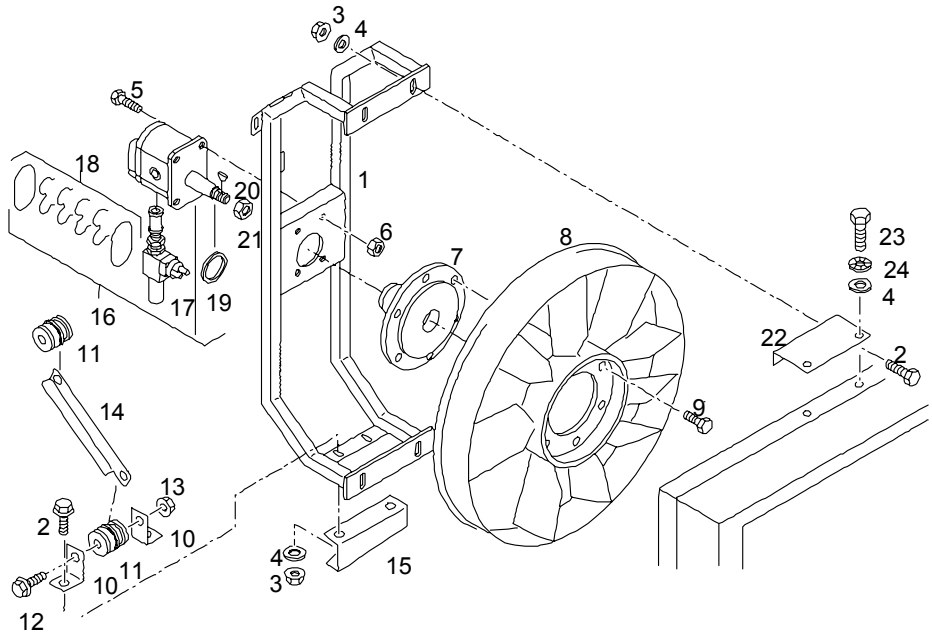

Pos	Part No.	Description	Pat	ME	All	Stk
1	81.06640-5390	fan carrier assembly		0		1
2	06.01283-5215	hex bolt M10X25-8.8-MAN183-B1		0		8
	81.93001-0208	bush 11X14X22/8X5,5-ST50-2-A4C		0		NB
3	06.11240-0406	hex lock nut BM10-8-MAN183-B1		0		8
4	06.15013-0412	washer A10,5X20X2-200HV-MAN183-B1		0		8
5	06.01283-5115	hex bolt M8X25-8.8-MAN183-B1		0		4
6	06.11240-0404	hex lock nut BM8-8-MAN183-B1		0		4
7	81.06604-0041	flange		0		1

05.08.2004	Type A51 00	Pet 04.92	Chassis No.	Group 061-0	Figure 06 1275
12:49	Table fan drive and bearings		Reference No. 88.#0270-0015 00.00 - 00.00 cooling system D2866 LOH29/D2876 LOH02 (301/328KW; 410/460PS)		
Seite: 002					

Pos	Part No.	Description	Pat	ME	All	Stk
8	51.06601-0257	suction fan DMR 754		0		1
9	06.02813-4306	hex lock screw M8X16-10.9-MAN183-B1		0		6
10	81.97488-0306	angle		0		4
11	81.96210-6057	rubber pad assembly		0		2
12	06.02813-4417	hex lock screw M10X60-10.9-MAN183-B1		0		2
13	06.11251-2001	hex lock nut M10-10-MAN183-B1		0		2
14	81.06640-0179	support		0		1
15		deleted				*
16	81.06660-6059	hydraulic motor 24 V		0		1
		>fig. >17-21 >deleted				*
22	81.06640-0169	bracket		0		2
23	06.01283-5211	hex bolt M10X16-8.8-MAN183-B1		0		4
24	06.16160-4106	lock washer 10-MAN183-B1		0		4

05.08.2004	Type A51 00	Pet 04.92	Chassis No.	Group 061-0	Figure 06 0801
12:54	Table fluid reservoir		Reference No. 88.#0270-0015 00.00 - 00.00 cooling system D2866 LOH29/D2876 LOH02 (301/328KW; 410/460PS)		
Seite: 001					

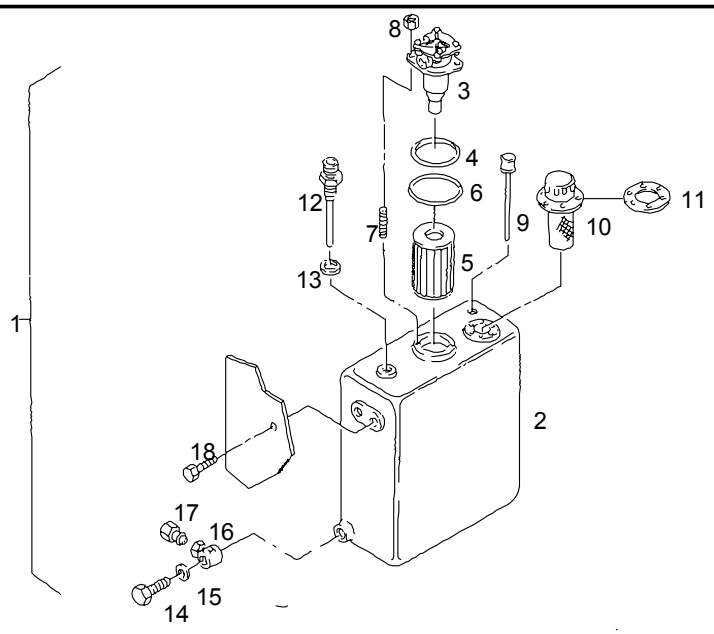

Pos	Part No.	Description	Pat	ME	All	Stk
1	81.06664-6024	fluid reservoir assembly		0		1
		compl.set no longer available replaced by: components				*
2	81.06664-6021	>fluid reservoir		0		1
	81.97811-0985	>instruction plate		0		1
3	81.06670-6002	>return filter		0		1
4	06.56930-2985	>>toric seal >>85,09X5,33N-NBR3-70		0		1
5	81.06668-0006	>>hydr. fluid filter element >>with gasket		0		1
6	06.56930-3084	>>toric seal >>90X6N-NBR3-70		0		1

05.08.2004	Type A51 00	Pet 04.92	Chassis No.	Group 061-0	Figure 06 0801
12:54	Table fluid reservoir		Reference No. 88.#0270-0015 00.00 - 00.00 cooling system D2866 LOH29/D2876 LOH02 (301/328KW; 410/460PS)		
Seite: 002					

Pos	Part No.	Description	Pat	ME	All	Stk
7	06.06225-8704	>stud >M8X20-8.8-A2C		0		2
8	06.11240-0404	>hex lock nut >BM8-8-MAN183-B1		0		2
9	81.47303-0045	>oil dipstick		0		1
10	81.06670-6003	>vent filter		0		1
11	81.96503-0343	>>flat gasket		0		1
12	81.98130-0473	>straight threaded union		0		1
13	06.56190-0736	>seal >A33X39-CU >asbestos-free		0		1
14	06.08099-0019	>drain plug >AM22X1,5-ST-MAN183-B1	1000	0		1
15	06.56190-0718	>seal >A22X27-CU	1000	0		1
16	06.73599-0070	swivel union L15 M22X1,5		0		NB
17	81.90310-0479	plug L15		0		NB
18	06.02813-4307	hex lock screw M8X18-10.9-MAN183-B1		0		4

05.08.2004	Type A51 00	Pet 04.92	Chassis No.	Group 061-0	Figure 06 1278
12:55	Table oil cooler		Reference No. 88.#0270-0015 00.00 - 00.00 cooling system D2866 LOH29/D2876 LOH02 (301/328KW; 410/460PS)		
Seite: 001					

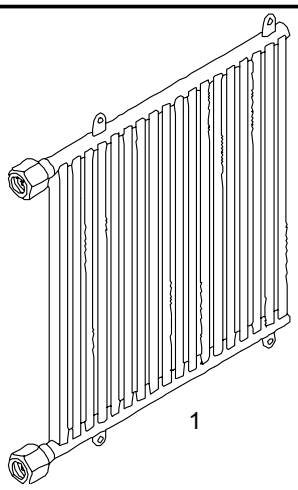

Pos	Part No.	Description	Pat	ME	All	Stk
1	81.05601-6014	oil cooler	0602	0		1
1	81.05601-0013	oil cooler		0		1

06 DEBRİYAJ
CLUTCH
x

06-010	Debriyaj Clutch x	TB162W TB163W	TB162Z TB163Z	TB162X TB163X	TB162Y TB163Y
06-020	Debriyaj yağ boruları Clutch Oil Piping x	TB162W TB163W	TB162Z TB163Z	TB162X TB163X	TB162Y TB163Y

TEMSA	Debriyaj Clutch	Drw.no: Vehicle Model: **TB162W, TB162Z, TB162X, TB162Y** **TB163W, TB163Z, TB163X, TB163Y**	**06-010** RevDate: Page: 1

Pos	Part Number	Turkish	English	German	Qty	R/P	From	Up To	Original Number Supplier
*		MFZ 430 DEBRİYAJ	MFZ 430 CLUTCH				*		

18.12.2003	Type A51 00	Pet 04.92	Chassis No.	Group 300-0	Figure 30 0003
17:59	Table clutch booster		Reference No. 88.#0070-0013 00.00 - 00.00 clutch ZF S6-1600 with+without TELMA, + VOITHT + intarder (228-257KW)		
Seite: 001					

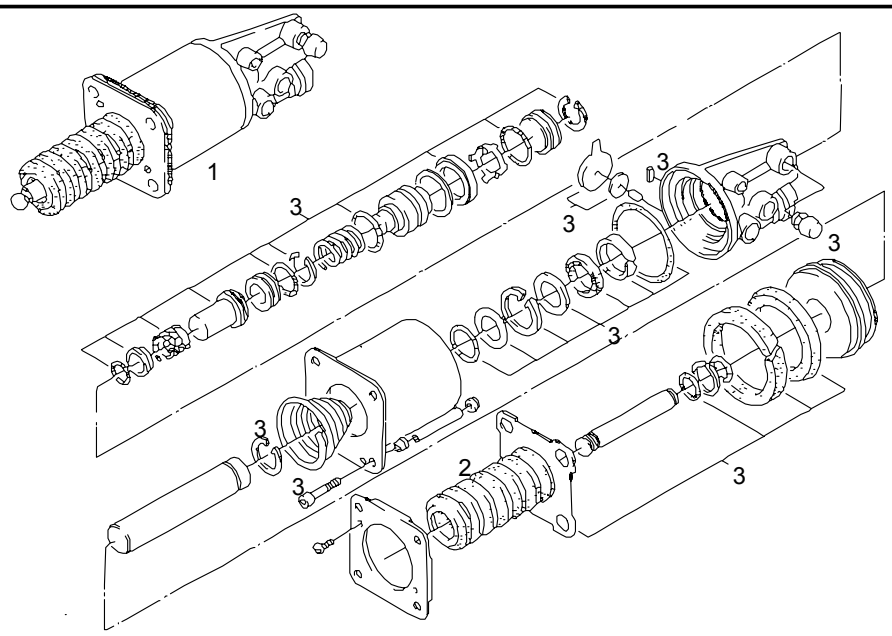

Pos	Part No.	Description	Pat	ME	All	Stk
1	81.30725-6054	clutch booster wear check "WH"		0		1
		optional				*
		compl.set no longer available replaced by: 81.30725-6053				*
1	81.30725-6053	clutch booster "KR"		0		1
2	81.96420-0442	>bellows		0		1
		>>for >>81.30725-6053				*
2	81.96420-0345	>bellows		0		1
		>>for >>81.30725-6054				*

18.12.2003	Type A51 00	Pet 04.92	Chassis No.	Group 300-0	Figure 30 0003
17:59	Table clutch booster		Reference No. 88.#0070-0013 00.00 - 00.00 clutch ZF S6-1600 with+without TELMA, + VOITHT + intarder (228-257KW)		
Seite: 002					

Pos	Part No.	Description	Pat	ME	All	Stk
3	81.30725-6047	>repair kit >asbestos-free >for >81.30725-6054		S		1 *
3	81.30725-6042	repair kit asbestos-free >for >81.30725-6053		S		1 *

18.12.2003	Type A51 00	Pet 04.92	Chassis No.	Group 300-0	Figure 30 0069	
17:59	Table clutch control			Reference No. 88.#0070-0013 00.00 - 00.00 clutch ZF S6-1600 with+without TELMA, + VOITHT + intarder (228-257KW)		
Seite: 001						

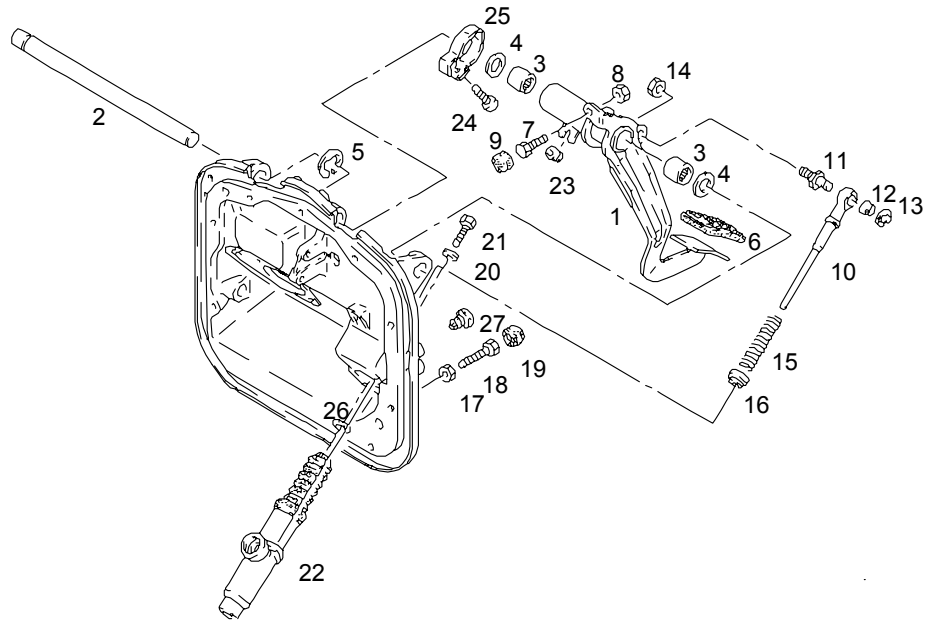

Pos	Part No.	Description	Pat	ME	All	Stk
1	81.48225-5097	clutch pedal assembly		0		1
		fig. 2 - 5				*
		see group 520/0 foot brake control				*
6	81.48227-0006	pedal covering		0		1
7	06.01283-5115	hex bolt M8X25-8.8-MAN183-B1		0		1
8	06.11064-2114	hexagon nut M8-8-MAN183-B1		0		1
9	81.96020-0369	rubber pad		0		1
10	81.91020-0658	tappet		0		1
11	81.91020-0611	threaded pin		0		1

18.12.2003	Type A51 00	Pet 04.92	Chassis No.	Group 300-0	Figure 30 0069
17:59	Table clutch control		Reference No. 88.#0070-0013 00.00 - 00.00 clutch ZF S6-1600 with+without TELMA, + VOITHT + intarder (228-257KW)		
Seite: 002					

Pos	Part No.	Description	Pat	ME	All	Stk
12	06.33719-0018	needle sleeve HK1010-SM01		0		1
13	06.29050-0111	lock washer 8-ZNPHR3F		0		1
14	06.11240-0406	hex lock nut BM10-8-MAN183-B1		0		1
15	06.46080-0422	pressure spring 1,25X12,5X90,5		0		1
16	81.97680-0072	spring seat		0		1
		fig. 17 - 19 deleted				*
20	06.15013-0411	washer A8,4X16X1,6-200HV-MAN183-B1		0		2
21	06.01303-3113	hex bolt M8X20SK-8.8-MAN183-A2C		0		2
22		see plate: clutch master cylinder				*
		fig. 23 - 25 deleted				*
26	06.56930-1973	toric seal 42X2-NBR3-70		0		1
27	81.96002-0384	plug B18X4-MAN319-2F-RAL9011		0		NB

18.12.2003	Type A51 00	Pet 04.92	Chassis No.	Group 300-0	Figure 30 0182
18:03	Table plug for pedal bracket		Reference No. 88.#0070-0013 00.00 - 00.00 clutch ZF S6-1600 with+without TELMA, + VOITHT + intarder (228-257KW)		
Seite: 001					

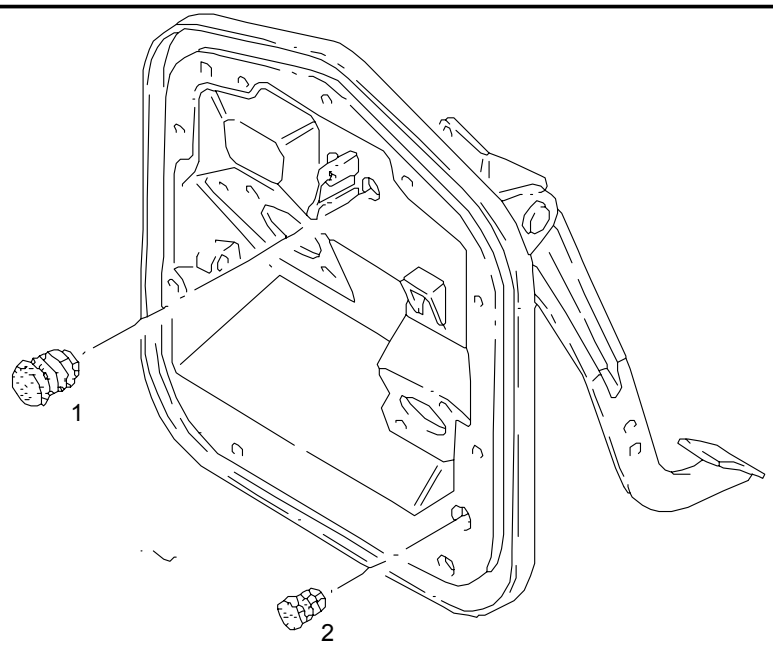

Pos	Part No.	Description	Pat	ME	All	Stk
1	81.96002-0130	plug B25X3-PE-SW		0		2
2	81.96002-0131	plug B18X3		0		1

18.12.2003	Type A51 00	Pet 04.92	Chassis No.	Group 300-0	Figure 30 0300
18:03	Table piping from master cylinder to clutch booster		Reference No. 88.#0070-0013 00.00 - 00.00 clutch ZF S6-1600 with+without TELMA, + VOITHT + intarder (228-257KW)		
Seite: 001					

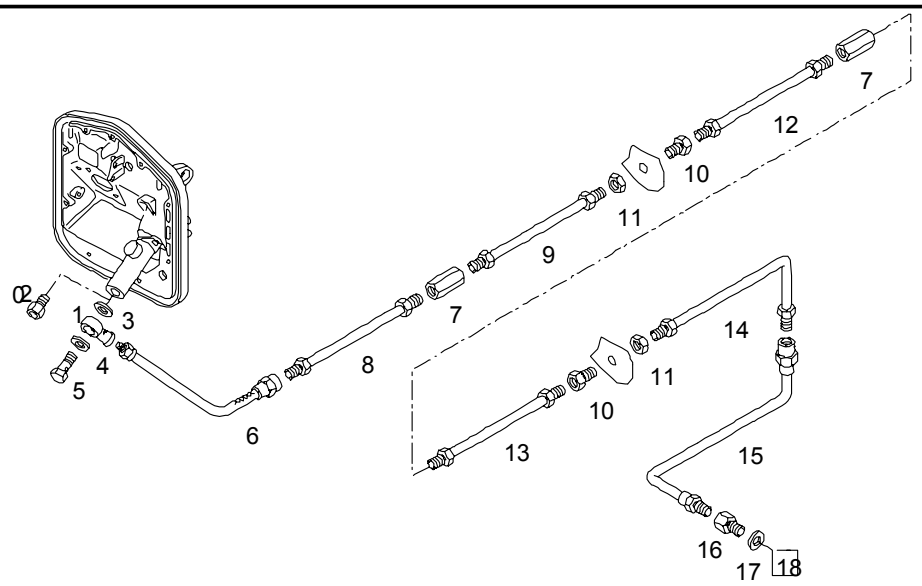

Pos	Part No.	Description	Pat	ME	All	Stk
1	06.78380-2204	ring union	0701	0		1
2	06.78412-0305	threaded union		0		1
3	06.56190-0709	seal A16X22-CU	0701	0		1
3	06.56190-0706	seal A14X20-CU		0		1
4	06.56190-0706	seal A14X20-CU	0701	0		1
5	06.78403-2105	hollow screw M14X1,5X28E-9SMNPB28K-A4C	0701	0		1
6	81.96340-0571	flexible brake line 5FGX260	0701	0		1
6	81.96340-0551	flexible brake line 5FGX750		0		1

18.12.2003	Type A51 00	Pet 04.92	Chassis No.	Group 300-0	Figure 30 0300
18:03	Table piping from master cylinder to clutch booster		Reference No. 88.#0070-0013 00.00 - 00.00 clutch ZF S6-1600 with+without TELMA, + VOITHT + intarder (228-257KW)		
Seite: 002					

Pos	Part No.	Description	Pat	ME	All	Stk
7	06.78370-2105	straight threaded union M14X1,5-A4C		0		2
8	81.31111-5331	oil line assembly with beading 8X0,7X2166		0		1
9	81.31111-5332	oil line assembly with beading 8X0,7X1927		0		1
10	06.78370-2405	straight threaded union M14X1,5-A4C		0		NB
11	06.11164-8306	hexagon nut M20X1,5-6-A4C		0		2
12	81.31111-5333	oil line assembly with beading 8X0,7X2001		0		1
13		deleted				*
13	81.31111-5355	oil line assembly with beading K-8X0,7		0		1
14	88.31111-5011	oil line assembly soldered		0		1
15	81.96340-0551	flexible brake line 5FGX750		0		1
16	06.78412-2205	threaded union		0		1
17	06.56190-0706	seal A14X20-CU		0		1
18		to clutch booster				*

18.12.2003	Type A51 00	Pet 04.92	Chassis No.	Group 300-0	Figure 30 0192
18:00	Table clutch housing with clutch release		Reference No. 88.#0070-0013 00.00 - 00.00 clutch ZF S6-1600 with+without TELMA, + VOITHT + intarder (228-257KW)		
Seite: 001					

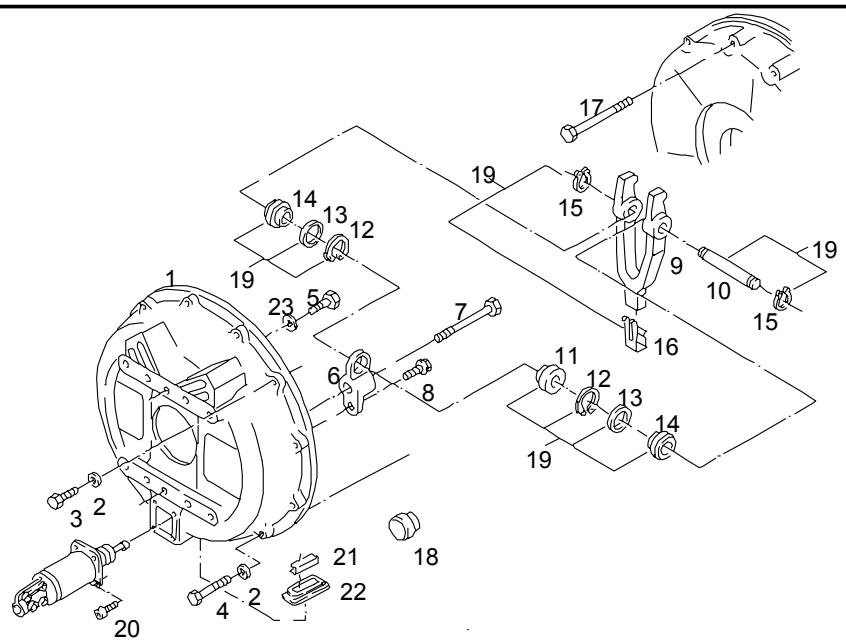

Pos	Part No.	Description	Pat	ME	All	Stk
1	81.30101-0148	clutch housing		0		1
2	06.15013-0412	washer A10,5X20X2-200HV-MAN183-B1		0		12
3	06.01013-7216	hex shoulder stud M10X55-8.8-MAN183-B1		0		4
4	06.01013-7219	hex shoulder stud M10X70-8.8-MAN183-B1		0		8
5	06.01733-4619	hex bolt M18X1,5X70-8.8-A-MAN183-PHR		0		7
6	81.30560-0055	pivot		0		1
7	06.01493-4624	hex shoulder stud M18X1,5X150-8.8-MAN183-PHR		0		1
8	06.02813-4913	hex lock screw M14X1,5X40-10.9-MAN183-B1		0		1
9	81.30560-0063	clutch operating lever		0		1

18.12.2003	Type A51 00	Pet 04.92	Chassis No.	Group 300-0	Figure 30 0192
18:00	Table clutch housing with clutch release		Reference No. 88.#0070-0013 00.00 - 00.00 clutch ZF S6-1600 with+without TELMA, + VOITHT + intarder (228-257KW)		
Seite: 002					

Pos	Part No.	Description	Pat	ME	All	Stk
10	81.91001-0604	pin		0		1
11	06.36950-0309	bearing bush GE25UK		0		1
12	06.29029-0036	circlip 42X1,75V		0		2
13	81.96601-0393	seal 32X42X5-PUR		0		2
14	81.91710-0314	ring		0		2
15	06.29019-0338	circlip 25X1,20-MAN183-B1		0		2
16	81.97640-0213	spring clamp	1403	0		1
17	06.01013-7221	hex shoulder stud M10X80-8.8-MAN183-B1		0		8
18	81.96002-0093	plug 19,3X8-25-PE		0		2
19		clutch release comprising: fig. 10-16				*
		replaced by components				*
20	06.02093-4408	cylinder screw M8X22-8.8-MAN183-B1		0		4
21		deleted				*
22	81.96002-0280	cap		0		1
23		deleted				*

18.12.2003	Type A51 00	Pet 04.92	Chassis No.	Group 300-0	Figure 30 0006
18:00	Table clutch master cylinder		Reference No. 88.#0070-0013 00.00 - 00.00 clutch ZF S6-1600 with+without TELMA, + VOITHT + intarder (228-257KW)		
Seite: 001					

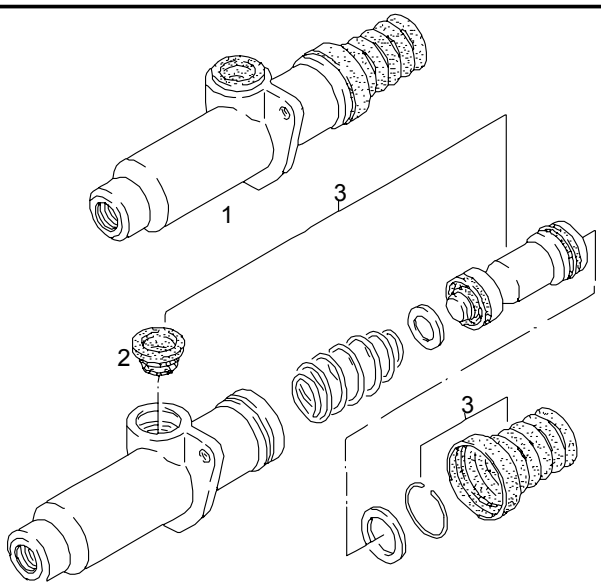

Pos	Part No.	Description	Pat	ME	All	Stk
1	81.30715-6111	clutch master cylinder		0		1
		no longer available replaced by: clutch master cylinder 81.30715-6119				*
1	81.30715-6119	clutch master cylinder		0		1
2	81.96002-0343	>grommet >12X22-27-EPDM-SW		0		1
		>for >clutch master cylinder >61.30715-6111				*
2		see repair kit				*
3	81.30715-6113	repair kit asbestos-free		S		1

18.12.2003	Type A51 00	Pet 04.92	Chassis No.	Group 300-0	Figure 30 0006
18:00	Table clutch master cylinder		Reference No. 88.#0070-0013 00.00 - 00.00 clutch ZF S6-1600 with+without TELMA, + VOITHT + intarder (228-257KW)		
Seite: 002					

Pos	Part No.	Description	Pat	ME	All	Stk
		for clutch master cylinder 81.30715-6111				*
3	81.30715-6138	repair kit asbestos-free		S		1
		for clutch master cylinder 81.30715-6119				*

18.12.2003	Type A51 00	Pet 04.92	Chassis No.	Group 300-0	Figure 30 0070
18:04	Table surge tank		Reference No. 88.#0070-0013 00.00 - 00.00 clutch ZF S6-1600 with+without TELMA, + VOITHT + intarder (228-257KW)		
Seite: 001					

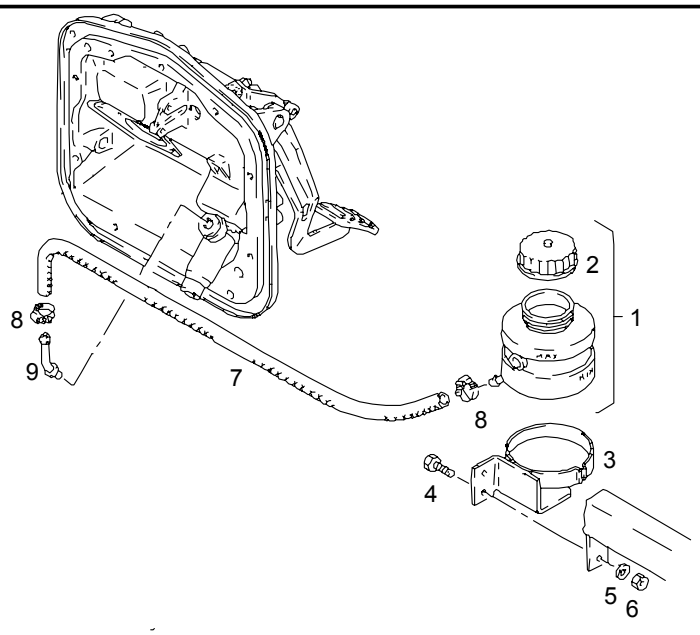

Pos	Part No.	Description	Pat	ME	All	Stk
1	81.31110-6018	surge tank assembly		0		1
2	81.30753-0005	>union		0		1
3	81.31140-5011	carrier assembly		0		1
4	06.07154-1703	oval-head self-tapping screw ST5,5X13C-H-A3C		0		2
		fig. 5+6 deleted				*
7	04.27105-0508	hose 7,3X2,9-EPDM		1		NB
8	06.67128-0704	hose clamp AL12-16		0		2
9	81.30719-0004	elbow		0		1

14.05.2004	Type A51 00	Pet 04.92	Chassis No.	Group 300-0	Figure 30 0120
16:38	Table clutch		Reference No. 81.#0070-0113 00.00 - 00.00 clutch MFZ 430		
Seite: 001					

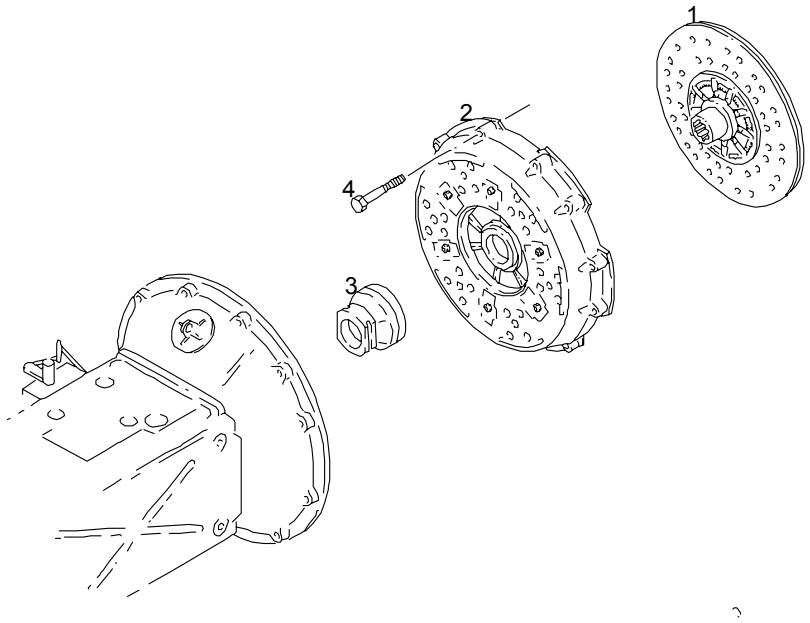

Pos	Part No.	Description	Pat	ME	All	Stk
1	81.30301-0501	clutch plate 430WGTZ/232 version from zf sachs ag	1099	0		1
1	81.30301-0500	clutch plate 430WGTZ/232 version from zf sachs ag		0		1
2	81.30305-0193	clutch pressure plate MFZ430 version from zf sachs ag		0		1
	81.30300-6003	repair kit clutch pressure plate		S		1
3	81.30550-0094	release bearing version from zf sachs ag		0		1
4		see plate: clutch housing				*
		with clutch release				*

TEMSA	Debriyaj yağ boruları Clutch Oil Piping Kupplungsflüssigkeitslettung	Group No : 06-020 Draw. Num. : x Rev. Date : Page : 1
	Vehicle Model: TB162W, TB162Z, TB162X, TB162Y, TB163W, TB163Z, TB163X, TB163Y	

TB162W
TB162X
TB163W
TB163X

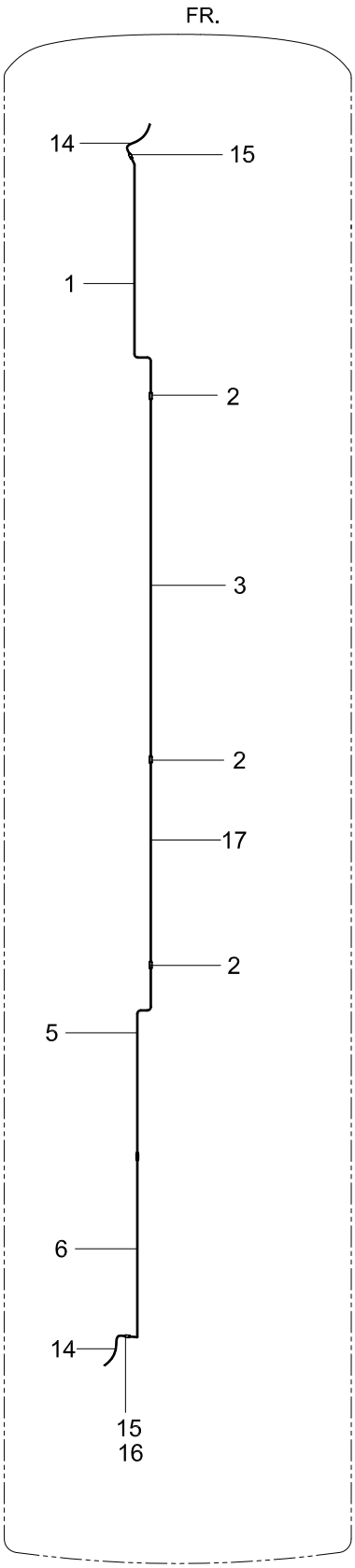

TB162Z
TB162Y
TB163Z
TB163Y

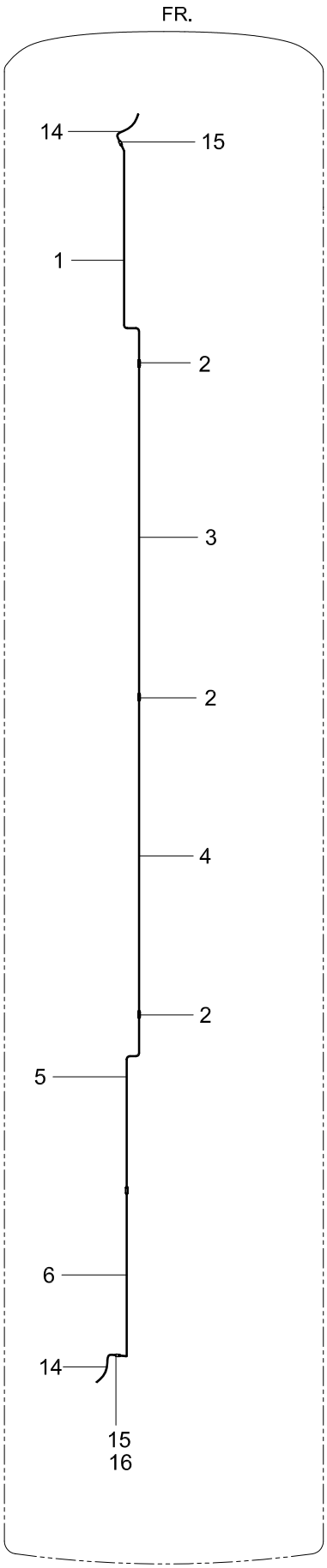

TEMSA	Debriyaj yağ boruları Clutch oil piping Kupplungsflüssigkeitslettung	Drw.no : 61102-90000-75/85 Vehicle Model: **TB162W, TB162Z, TB162X, TB162Y** **TB163W, TB163Z, TB163X, TB163Y**	**06-020** RevDate: Page: 1

Pos	Part Number	Turkish	English	German	Qty	R/P	From	Up To	Original Number Supplier
1	61102-90010-01Y	BORU	PIPE		1		1		
2	06.78370-2105Y	KONNEKTÖR	CONNECTOR		4		1		MAN
3	61102-90010-03Y	BORU	PIPE		1		1		
4	61102-90010-04Y	BORU	PIPE		1		1		
5	61102-90010-05Y	BORU	PIPE		1		1		
6	61102-90010-06Y	BORU	PIPE		1		1		
14	06.54100-4085	HORTUM	HOSE		2		1		MAN
15	81.98130-6037	KONNEKTÖR	THREADED UNION ASSY		2		1		MAN
16	81.98130-6038	KONNEKTÖR	THREADED UNION ASSY		1		1		MAN
17	61102-90010-17Y	BORU	PIPE		1		1		

07 ŞANZUMAN
TRANSMISSION
x

07-010	Şanzuman Transmission x	TB162W TB163W	TB162Z TB163Z	TB162X TB163X	TB162Y TB163Y

TEMSA	Şanzuman Transmission	Drw.no: Vehicle Model: **TB162W, TB162Z, TB162X, TB162Y** **TB163W, TB163Z, TB163X, TB163Y**	**07-010** RevDate: Page: 1

Pos	Part Number	Turkish	English	German	Qty	R/P	From	Up To	Original Number Supplier
*	6 S 1600 IT	ŞANZUMAN manual	TRANSMISSION MANUAL T/M		1		1	190704 2004	1310.091.167 ZF
*	6 S 1701	ŞANZUMAN manual	GEARBOX MANUAL T/M		1		190704 2004		1349-090-008 ZF
*	D864.3EKI	ŞANZUMAN otomatik	TRANSMISSION AUTOMATIC		1		1		68.9308.01 VOITH

08 VİTES
GEARSHIFT
x

08-010	Vites Gearshift x	TB162W TB163W		TB162X TB163X	
08-015	Vites Gearshift x		TB162Z TB163Z		TB162Y TB163Y

TEMSA	Vites Gearshift Gang	Group No : 08-010 Draw. Num. : x Rev. Date : Page : 1
	Vehicle Model: TB162W, TB162X, TB163W, TB163X,	

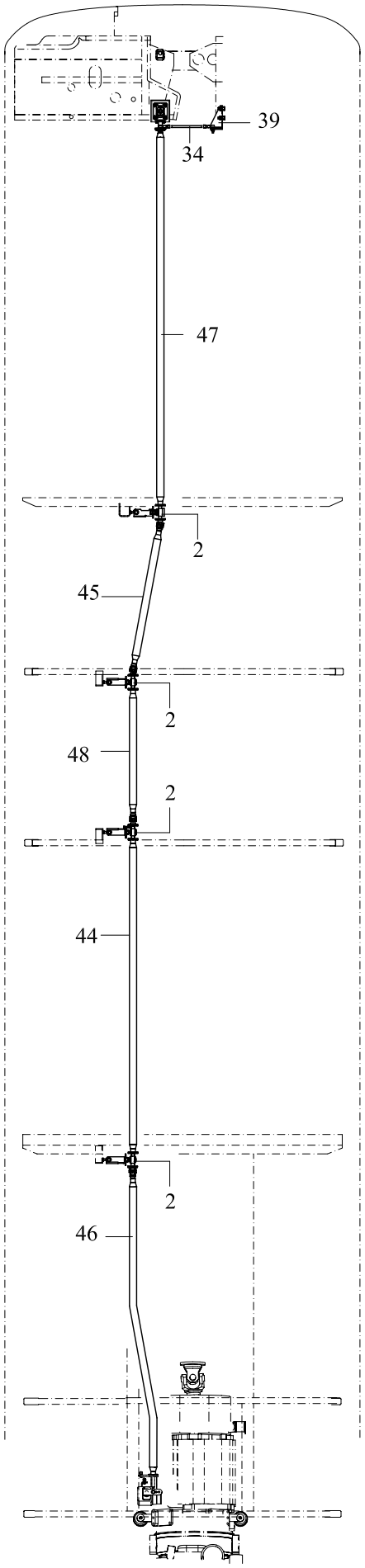

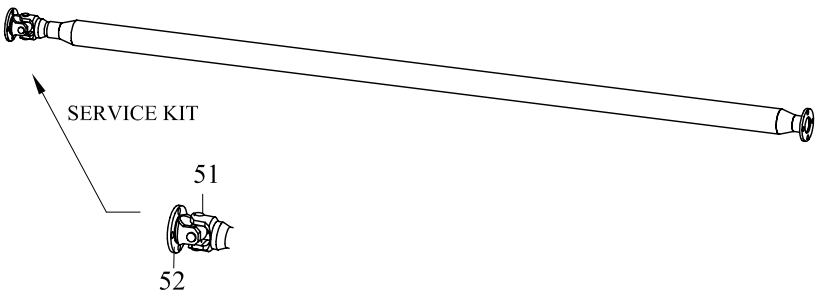

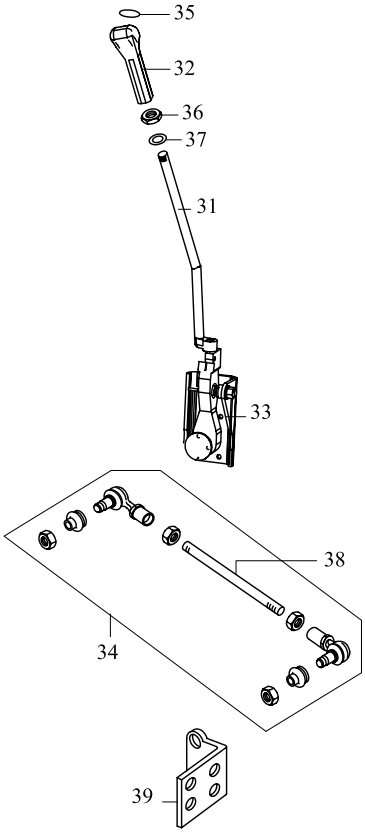

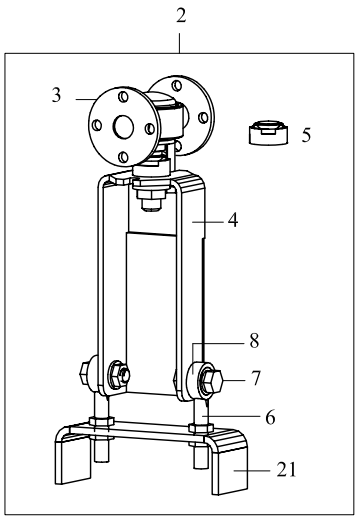

TEMSA	Vites Gearshift Gang	Drw.no : TC299110-650 Vehicle Model: **TB162W, TB162X, TB163W, TB163X,**	**08-010** RevDate: Page: 1

Pos	Part Number	Turkish	English	German	Qty	R/P	From	Up To	Original Number Supplier
2	TC299110-705Y	VİTES MEKANİZMASI	GEARSHIF MECHANISM		3		1		
3	TC299110-50Y	MAFSAL	JOINT		3		1		
4	TC299110-021BY	DESTEK	SUPPORT		3		1		
5	TC299110-015Y	LASTİK KÖRÜK	BOOT		3		1		
6	TC299110-018Y	ROTİL	DRAGLINK		6		1		
7	TC299110-013AY	CIVATA	BOLT		6		1		
8	TC299110-014Y	BURÇ	BUSHING		6		1		
21	TC299110-022X	BRAKET	BRACKET		1		1		
31	TC299110-113Y	VİTES KOLU	LEVER		1		1		ZF 6007-301-175
32	6005-200-238	TOPUZ	KNOB		1		1		ZF
33	6005-010-111	VİTES DEĞİŞTİRME	REMONTE CONTROL BLOCK		1		1		ZF
34	TC299110-278Y	DENGE KOLU	STABILIZER SHAFT		1		1		ZF
35	6038-323-082	KAPAK	COVER		1		1		
36	0637-006-125	SOMUN	NUT		1		1		
37	0630-001-048	PUL	WASHER		1		1		
38	TC299110-277Y	DENGE MİLİ	SHAFT		1		1		
39	TC299110-376Y	BRAKET	BRACKET		1		1		
44	TC299110-403Y	VİTES MİLİ	GEARSHIFT SHAFT		1		1		
45	TC299110-401Y	VİTES MİLİ	GEARSHIFT SHAFT		1		1		
46	TC299110-05Y	VİTES MİLİ	GEARSHIFT SHAFT		1		1		
47	TC299110-400Y	VİTES MİLİ	GEARSHIFT SHAFT		1		1		
51	TC299110-040X	ŞAFT İSTAVROZU	YOKE SHAFT - KIT		AR		1		
52	TC299110-030X	FLANŞ	FLANGE - KIT		AR		1		

TEMSA	Vites Gearshift Gang	Group No : 08-015 Draw. Num. : x Rev. Date : Page : 1
	Vehicle Model: TB162Z, TB162Y, TB163Z, TB163Y	

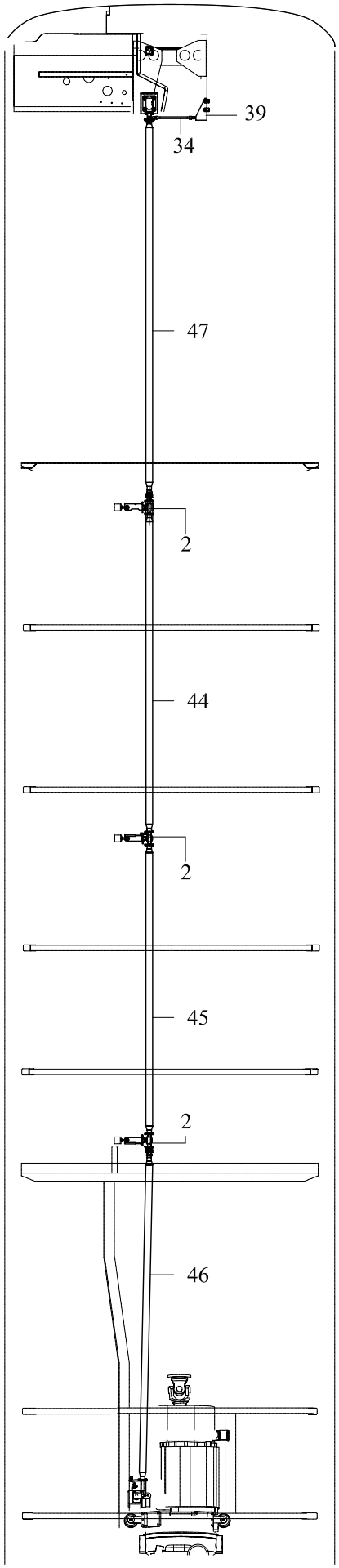

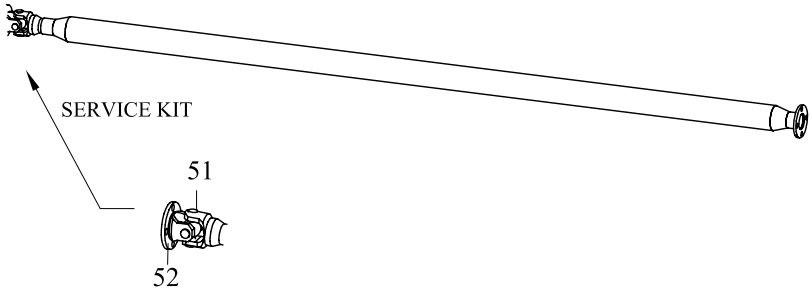

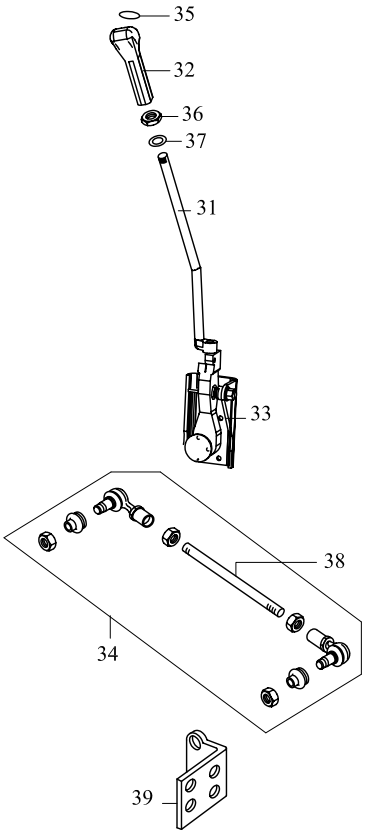

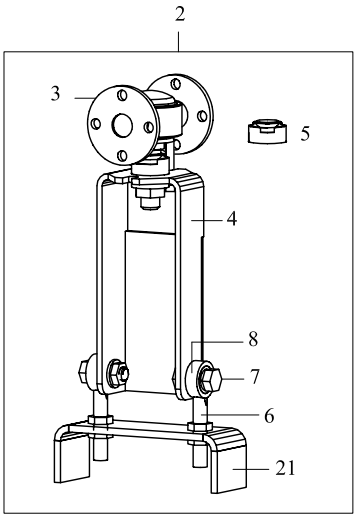

TEMSA	Vites Gearshift Gang	Drw.no : TC299110-750 Vehicle Model: **TB162Z, TB162Y** **TB163Z, TB163Y**	**08-015** RevDate: Page: 1

Pos	Part Number	Turkish	English	French	Qty	R/P	From	Up To	Original Number Supplier
2	TC299110-705Y	VİTES MEKANİZMASI	GEARSHIF MECHANISM		3		1		
3	TC299110-50Y	MAFSAL	JOINT		3		1		
4	TC299110-021BY	DESTEK	SUPPORT		3		1		
5	TC299110-015Y	LASTİK KÖRÜK	BOOT		3		1		
6	TC299110-018Y	ROTİL	DRAGLINK		6		1		
7	TC299110-013AY	CIVATA	BOLT		6		1		
8	TC299110-014Y	BURÇ	BUSHING		6		1		
21	TC299110-022X	BRAKET	BRACKET		1		1		
31	TC299110-113Y	VİTES KOLU	LEVER		1		1		ZF 6007-301-175
32	6005-200-238	TOPUZ	KNOB		1		1		ZF
33	6005-010-111	VİTES DEĞİŞTİRME	REMONTE CONTROL BLOCK		1		1		ZF
34	TC299110-278Y	DENGE KOLU	STABILIZER SHAFT		1		1		ZF
35	6038-323-082	KAPAK	COVER		1		1		
36	0637-006-125	SOMUN	NUT		1		1		
37	0630-001-048	PUL	WASHER		1		1		
38	TC299110-277Y	DENGE MİLİ	SHAFT		1		1		
39	TC299110-376Y	BRAKET	BRACKET		1		1		
44	TC299110-403Y	VİTES MİLİ	GEARSHIFT SHAFT		1		1		
45	TC299110-402Y	VİTES MİLİ	GEARSHIFT SHAFT		1		1		
46	TC299110-05Y	VİTES MİLİ	GEARSHIFT SHAFT		1		1		
47	TC299110-400Y	VİTES MİLİ	GEARSHIFT SHAFT		1		1		
51	TC299110-040X	ŞAFT İSTAVROZU	YOKE SHAFT - KIT		AR		1		
52	TC299110-030X	FLANŞ	FLANGE - KIT		AR		1		

09 ÖN AKS
FRONT AXLE
x

09-010	Ön aks Front Axle x	TB162W TB163W	TB162Z TB163Z	TB162X TB163X	TB162Y TB163Y

TEMSA	Ön aks Front axle	Drw.no: Vehicle Model: **TB162W, TB162Z, TB162X, TB162Y** **TB163W, TB163Z, TB163X, TB163Y**	**09-010** RevDate: Page: 1

Pos	Part Number	Turkish	English	German	Qty	R/P	From	Up To	Original Number Supplier
1	VOS-08-B-01	ÖN AKS	FRONT AXLE		1		1		MAN V9-82-SL

17.12.2003	Type A51 00	Pet 04.92	Chassis No.	Group 440-4	Figure 44 0172
18:15	Table axle mounting		Reference No. 81.#0260-0573 00.00 - 00.00 locating system front axle V9-82SL/VOS-08-B-01 with stabilizer		
Seite: 001					

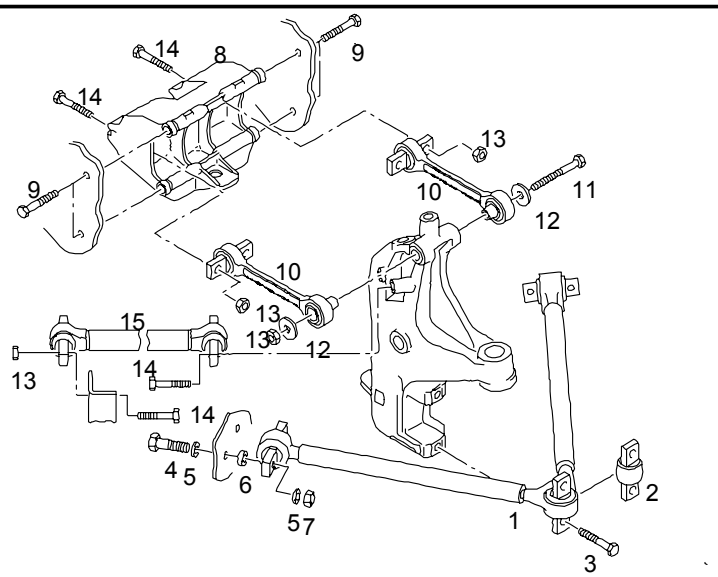

Pos	Part No.	Description	Pat	ME	All	Stk
1	81.43315-6037	a-frame assembly		0		2
1	TE771102	a-frame assembly TEMSA				
2	81.43315-0009	>pin >a-frame		0		2
3	06.01493-4720	hex shoulder stud M18X2X110-8.8-ZNPHR3F		0		4
4	06.01493-4718	hex shoulder stud M18X2X95-8.8-ZNPHR3F		0		8
5	06.15150-2112	washer 19X35X4		0		16
6	81.90713-0808	spacer 18,1X2		0		8
6	81.90713-0807	spacer 18,1X1		0		NB
6	81.90713-0809	spacer 18,1X5		0		NB

17.12.2003	Type A51 00	Pet 04.92	Chassis No.	Group 440-4	Figure 44 0172
18:15	Table axle mounting		Reference No. 81.#0260-0573 00.00 - 00.00 locating system front axle V9-82SL/VOS-08-B-01 with stabilizer		
Seite: 002					

Pos	Part No.	Description	Pat	ME	All	Stk
7	06.11241-0321	hex lock nut AM18X2-10-MAN183-B1		0		8
8	81.43315-0011	bracket axle control arm		0		2
9	06.01494-4920	hex shoulder stud M20X2X110-10.9-SCHLUSSG.-MAN18		0		8
10	81.43220-6177	axle control arm		0		4
10	TE771101	axle control arm TEMSA				
11	06.01499-0140	hex shoulder stud M14X1,5X300-8.8-A-A3C		0		2
12	81.43315-0010	washer 15X66X4-ST52-3-M3199		0		4
13	06.11241-0314	hex lock nut AM14X1,5-10-MAN183-B1		0		12
14	06.01493-2413	hex shoulder stud M14X1,5X70-8.8-A3C		0		16
15	81.43220-6178	axle control arm assembly		0		2
15	TE771100	axle control arm assembly TEMSA				

17.12.2003	Type A51 00	Pet 04.92	Chassis No.	Group 440-4	Figure 44 0141
18:18	Table brake cylinder mounting		Reference No. 81.44000-7996 00.00 - 00.00 front axle V9-82SL right		
Seite: 001					

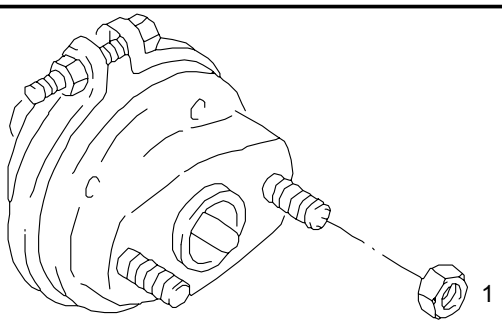

Pos	Part No.	Description	Pat	ME	All	Stk
1	06.11241-0317	>hex lock nut >AM16X1,5-10-MAN183-B1		0		4

17.12.2003	Type A51 00	Pet 04.92	Chassis No.	Group 440-4	Figure 44 0141
18:18	Table brake cylinder mounting		Reference No. 81.44000-7997 00.00 - 00.00 front axle V9-82SL left		
Seite: 001					

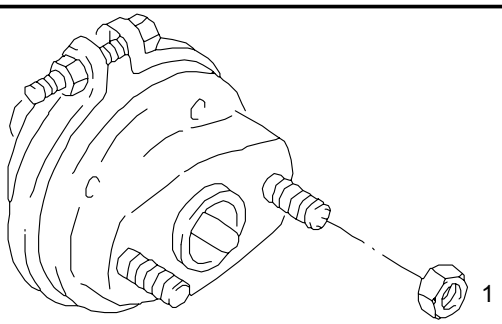

Pos	Part No.	Description	Pat	ME	All	Stk
1	06.11241-0317	>hex lock nut >AM16X1,5-10-MAN183-B1		0		4

17.12.2003	Type A51 00	Pet 04.92	Chassis No.	Group 440-4	Figure 44 0205
18:22	Table disc brake caliper		Reference No. 88.#0250-0006 00.00 - 00.00 V9-82SL for ABS+BVA single tyres (LL)		
Seite: 001					

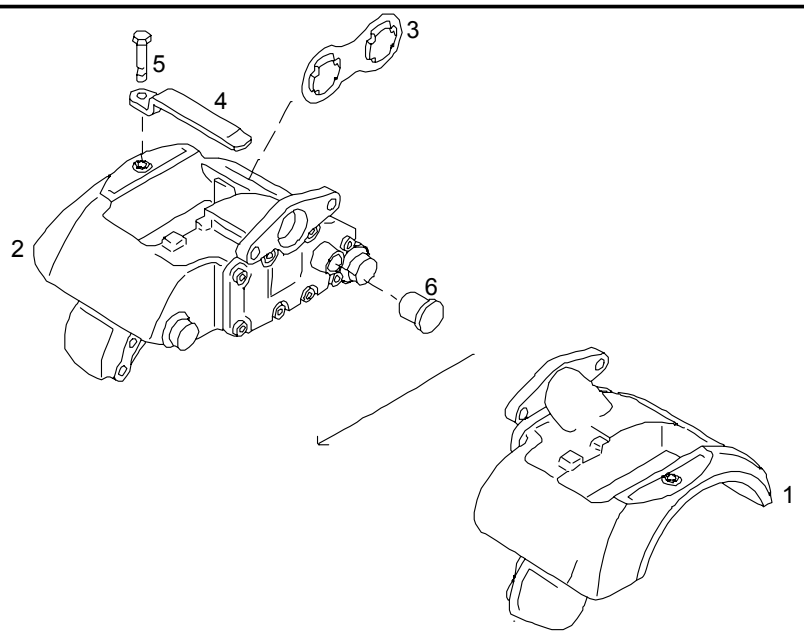

Pos	Part No.	Description	Pat	ME	All	Stk
1	81.50804-6197	disc brake caliper assembly without lining		0		1
2	81.50804-6198	disc brake caliper assembly without lining		0		1
3	81.50822-0006	>piston retaining plate		0		2
4	81.50822-0007	>retainer		0		2
5	06.01771-8107	>hex bolt >M10X1,25X20-8.8-A3C		0		2
6	81.50810-0003	>dust cap		0		2

17.12.2003	Type A51 00	Pet 04.92	Chassis No.	Group 440-4	Figure 44 0138
18:23	Table disc brake caliper mounting		Reference No. 81.44000-7996 00.00 - 00.00 front axle V9-82SL right		
Seite: 001					

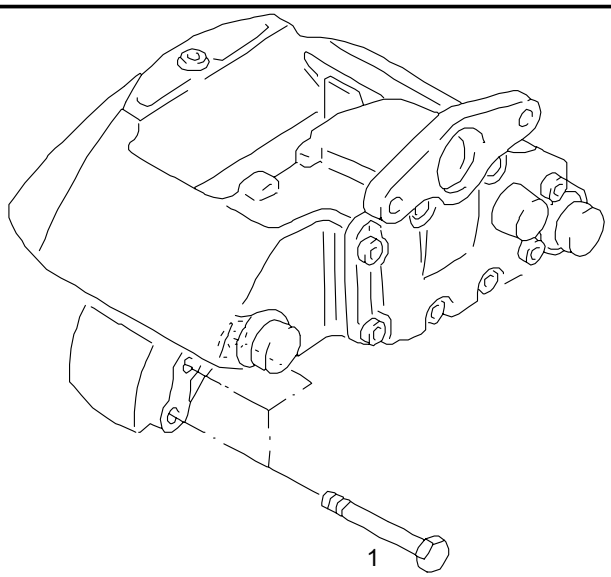

Pos	Part No.	Description	Pat	ME	All	Stk
1	06.01494-4611	>hex shoulder stud >M18X1,5X60-10.9-MAN183-PHR		0		6

17.12.2003	Type A51 00	Pet 04.92	Chassis No.	Group 440-4	Figure 44 0138
18:23	Table disc brake caliper mounting		Reference No. 81.44000-7997 00.00 - 00.00 front axle V9-82SL left		
Seite: 001					

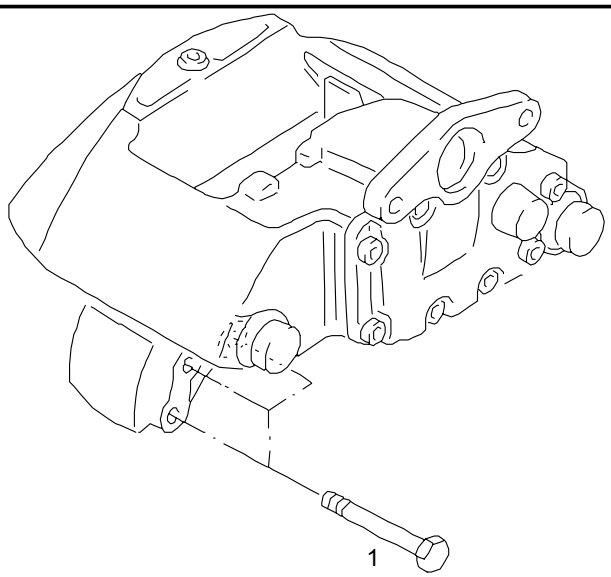

Pos	Part No.	Description	Pat	ME	All	Stk
1	06.01494-4611	>hex shoulder stud >M18X1,5X60-10.9-MAN183-PHR		0		6

17.12.2003	Type A51 00	Pet 04.92	Chassis No.	Group 440-4	Figure 44 0140
18:24	Table disc brake caliper repair kits		Reference No. 88.#0250-0006 00.00 - 00.00 V9-82SL for ABS+BVA single tyres (LL)		
Seite: 001					

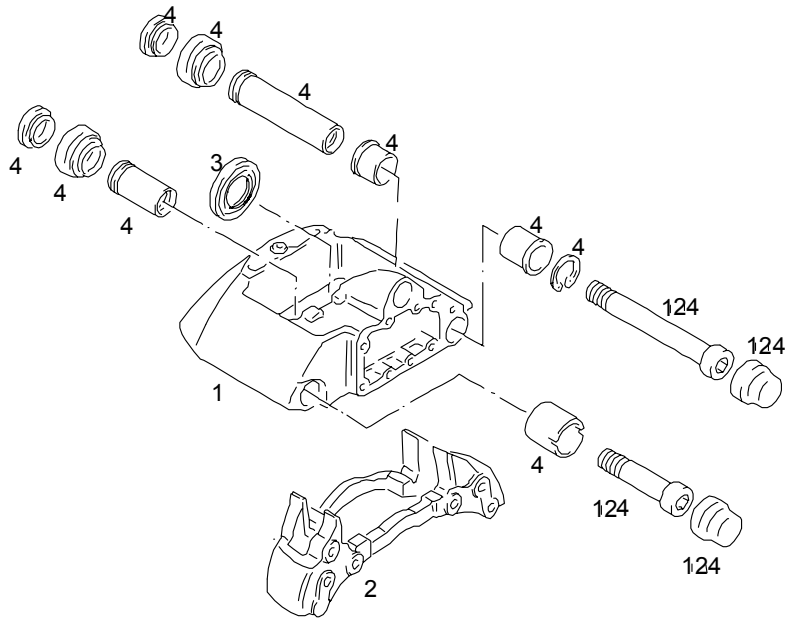

Pos	Part No.	Description	Pat	ME	All	Stk
1		deleted				*
2	81.50802-6015	brake anchor plate assembly		0		2
3	81.50802-6016	repair kit tappet asbestos-free		S		2
4	81.50802-6022	repair kit guide rubber bush		S		2
		>only for				*
		>disc brake caliper >81.50804-6216/17/6253/54				*

17.12.2003	Type A51 00	Pet 04.92	Chassis No.	Group 440-4	Figure 44 0177
18:26	Table front wheel hub brake disc		Reference No. 81.44001-7094 00.00 - 00.00 front axle VOS-08-B-01 right air sprung disc brake 22,5" + ABS		
Seite: 001					

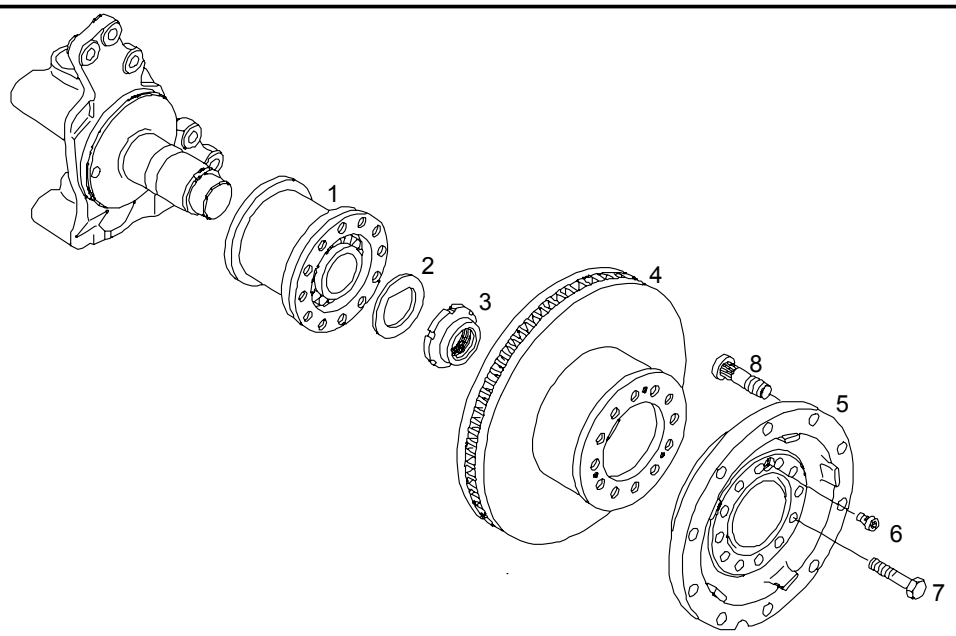

Pos	Part No.	Description	Pat	ME	All	Stk
1	81.93420-0330	taper roller bearing with pulse wheel 70X196X130		0		1
2	81.44215-0035	thrust washer		0		1
3	81.90620-0086	lock ring M58X1,5		0		1
4	81.50803-0040	brake disc 22,5"		0		1
5	81.44301-0177	front wheel flange V9-82L		0		1
6	06.02100-2555	cylinder screw M12X1,5X25-8.8-A3C		0		1
7	06.01494-4611	hex shoulder stud M18X1,5X60-10.9-MAN183-PHR		0		12
8	81.45501-0129	wheel mounting bolt M22X1,5X28X65-10.9-MAN183-B2		0		10

17.12.2003	Type A51 00	Pet 04.92	Chassis No.	Group 440-4	Figure 44 0177
18:26	Table front wheel hub brake disc		Reference No. 81.44001-7095 00.00 - 00.00 front axle VOS-08-B-01 left air sprung disc brake 22,5" + ABS		
Seite: 001					

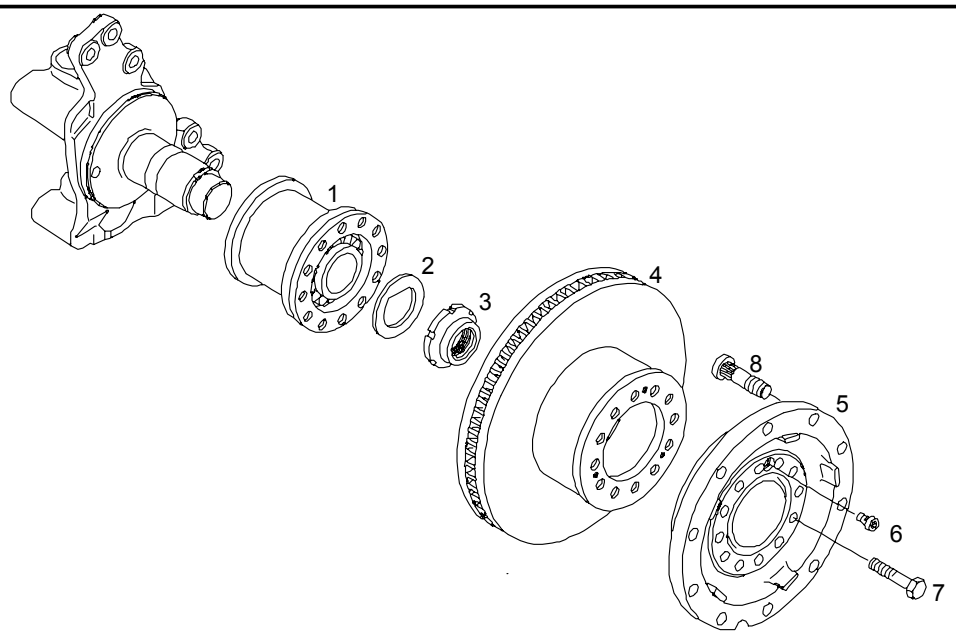

Pos	Part No.	Description	Pat	ME	All	Stk
1	81.93420-0330	taper roller bearing with pulse wheel 70X196X130		0		1
2	81.44215-0035	thrust washer		0		1
3	81.90620-0086	lock ring M58X1,5		0		1
4	81.50803-0040	brake disc 22,5"		0		1
5	81.44301-0177	front wheel flange V9-82L		0		1
6	06.02100-2555	cylinder screw M12X1,5X25-8.8-A3C		0		1
7	06.01494-4611	hex shoulder stud M18X1,5X60-10.9-MAN183-PHR		0		12
8	81.45501-0129	wheel mounting bolt M22X1,5X28X65-10.9-MAN183-B2		0		10

17.12.2003	Type A51 00	Pet 04.92	Chassis No.	Group 440-4	Figure 44 0136
18:27	Table lube lines axle bolt		Reference No. 81.44000-7996 00.00 - 00.00 front axle V9-82SL right		
Seite: 001					

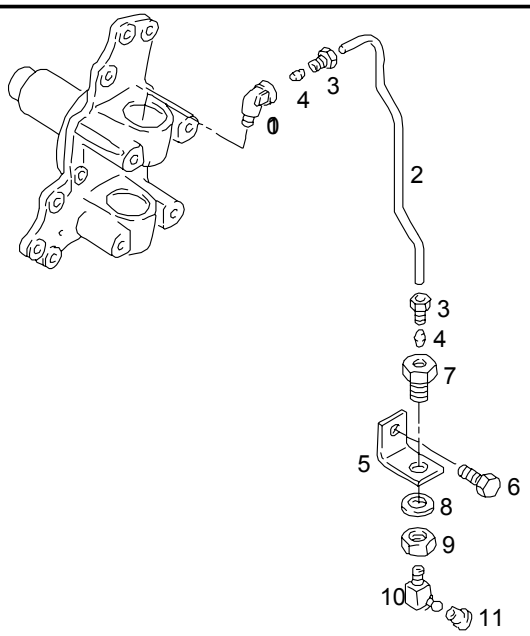

Pos	Part No.	Description	Pat	ME	All	Stk
1		see plate: front dead axle with steering knuckle				*
2	81.44230-2017	lube line L-4X0,8X1000		0		1
3	06.71040-2102	>socket union >ALL4-M8X1-A3C		0		2
4	06.74080-0102	>double taper ring >4-CUZN		0		2
5	81.97488-0317	angle 2 holes		0		1
6	06.01283-5211	hex bolt M10X16-8.8-MAN183-B1		0		1
7	06.38110-0101	connecting union A1		0		1

17.12.2003	Type A51 00	Pet 04.92	Chassis No.	Group 440-4	Figure 44 0136	
18:27	Table lube lines axle bolt			Reference No. 81.44000-7996 00.00 - 00.00 front axle V9-82SL right		
Seite: 002						

Pos	Part No.	Description	Pat	ME	All	Stk
8	06.16160-2108	lock washer 14-A3C		0		1
9	06.11271-2406	hexagon nut BM14X1,5-04-A3C		0		1
10	06.38070-2202	hydraulic-type lube nipple BS8X1-4KT		0		1
11	81.96002-0191	protective cap for B-PE-RT hydraulic-type lube nipple		0		1

17.12.2003	Type A51 00	Pet 04.92	Chassis No.	Group 440-4	Figure 44 0136
18:27	Table lube lines axle bolt		Reference No. 81.44000-7997 00.00 - 00.00 front axle V9-82SL left		
Seite: 001					

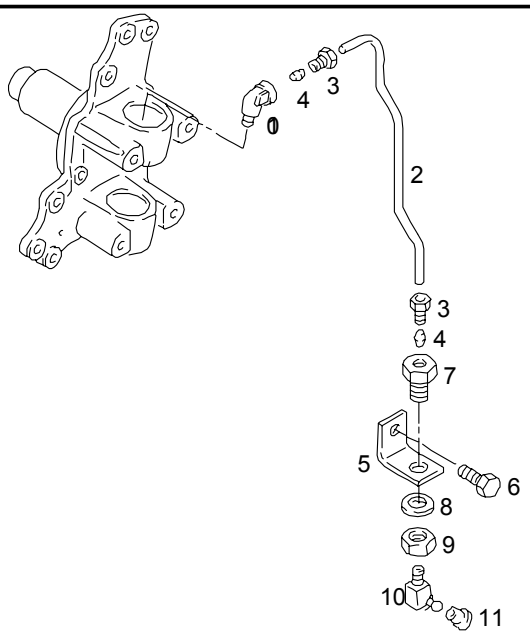

Pos	Part No.	Description	Pat	ME	All	Stk
1		see plate: front dead axle with steering knuckle				*
2	81.44230-2017	lube line L-4X0,8X1000		0		1
3	06.71040-2102	>socket union >ALL4-M8X1-A3C		0		2
4	06.74080-0102	>double taper ring >4-CUZN		0		2
5	81.97488-0317	angle 2 holes		0		1
6	06.01283-5211	hex bolt M10X16-8.8-MAN183-B1		0		1
7	06.38110-0101	connecting union A1		0		1

17.12.2003	Type A51 00	Pet 04.92	Chassis No.	Group 440-4	Figure 44 0136	
18:27	Table lube lines axle bolt			Reference No. 81.44000-7997 00.00 - 00.00 front axle V9-82SL left		
Seite: 002						

Pos	Part No.	Description	Pat	ME	All	Stk
8	06.16160-2108	lock washer 14-A3C		0		1
9	06.11271-2406	hexagon nut BM14X1,5-04-A3C		0		1
10	06.38070-2202	hydraulic-type lube nipple BS8X1-4KT		0		1
11	81.96002-0191	protective cap for B-PE-RT hydraulic-type lube nipple		0		1

17.12.2003	Type A51 00	Pet 04.92	Chassis No.	Group 440-4	Figure 44 0173
18:28	Table reverse lever operating lever with bearings		Reference No. 81.#0260-0573 00.00 - 00.00 locating system front axle V9-82SL/VOS-08-B-01 with stabilizer		
Seite: 001					

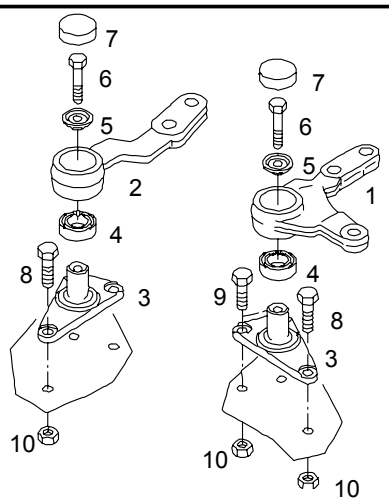

Pos	Part No.	Description	Pat	ME	All	Stk
1	81.46720-0123	reverse lever		0		1
2	81.46720-0122	operating lever		0		1
3	81.46730-0042	bracket		0		2
4	81.93420-6076	taper roller bearing 40X73X55		0		2
5	81.46741-0010	washer		0		2
6	06.02834-6517	hex lock screw M12X1,5X65D-MK12-10.9-PHR		0		2
7	81.46732-0018	cover B73/14,5-ST1203-A3C		0		2
8	06.01734-6413	hex bolt M14X1,5X40-10.9-MAN183-B1	3298	0		4
8	06.01734-4414	hex bolt M14X1,5X45-M10.9-MAN183-PHR	0103	0		4

17.12.2003	Type A51 00	Pet 04.92	Chassis No.	Group 440-4	Figure 44 0173
18:28	Table reverse lever operating lever with bearings		Reference No. 81.#0260-0573 00.00 - 00.00 locating system front axle V9-82SL/VOS-08-B-01 with stabilizer		
Seite: 002					

Pos	Part No.	Description	Pat	ME	All	Stk
8	06.01734-4414	hex bolt M14X1,5X45-M10.9-MAN183-PHR		0		2
9	06.01734-6413	hex bolt M14X1,5X40-10.9-MAN183-B1	3298	0		2
9	06.01494-4417	hex shoulder stud M14X1,5X90-10.9-MAN183-PHR	0103	0		2
9	06.01494-4417	hex shoulder stud M14X1,5X90-10.9-MAN183-PHR		0		4
10	06.11241-0314	hex lock nut AM14X1,5-10-MAN183-B1		0		6

17.12.2003	Type A51 00	Pet 04.92	Chassis No.	Group 440-4	Figure 44 0196
18:30	Table steering knuckle and bearings steering knuckle carrier			Reference No. 81.44001-7094 00.00 - 00.00 front axle VOS-08-B-01 right air sprung disc brake 22,5" + ABS	
Seite: 001					

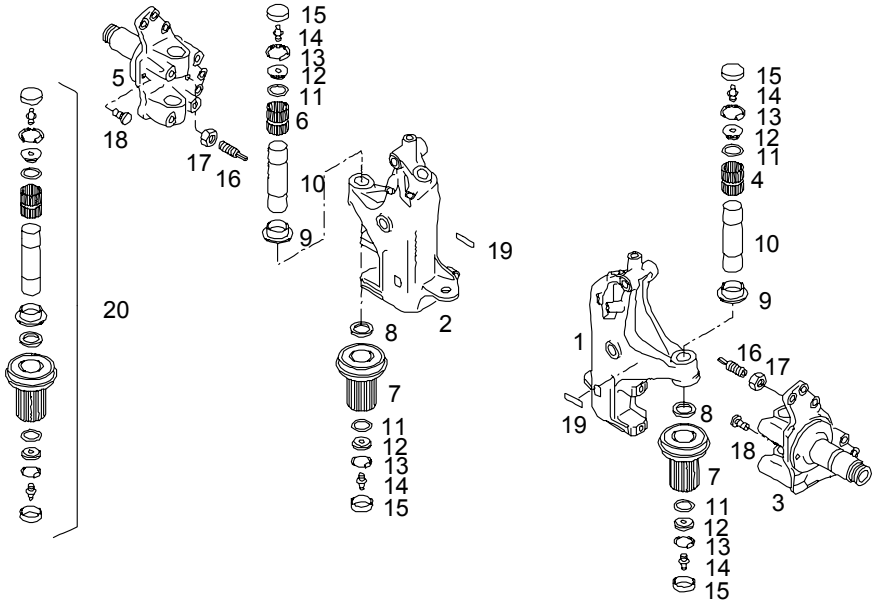

Pos	Part No.	Description	Pat	ME	All	Stk
2	81.44202-0076	steering knuckle carrier right		0		1
5	81.44201-6268	steering knuckle assembly right		0		1
6	06.33719-0101	>needle sleeve >50X60X59		0		1
7	81.93404-0066	needle sleeve		0		1
8	81.90714-0340	shim 53,7X86X1,8-ST2K60BK-ZNPHR3F		0		NB
8	81.90714-0341	shim 53,7X86X1,9-ST2K60BK-ZNPHR3F		0		NB
8	81.90714-0342	shim 53,7X86X2,0-ST2K60BK-ZNPHR3F		0		NB
8	81.90714-0343	shim 53,7X86X2,1-ST2K60BK-ZNPHR3F		0		NB

17.12.2003	Type A51 00	Pet 04.92	Chassis No.	Group 440-4	Figure 44 0196
18:30	Table steering knuckle and bearings steering knuckle carrier		Reference No. 81.44001-7094 00.00 - 00.00 front axle VOS-08-B-01 right air sprung disc brake 22,5" + ABS		
Seite: 002					

Pos	Part No.	Description	Pat	ME	All	Stk
8	81.90714-0344	shim 53,7X86X2,2-ST2K60BK-ZNPHR3F		0		NB
8	81.90714-0345	shim 53,7X86X2,3-ST2K60BK-ZNPHR3F		0		NB
8	81.90714-0346	shim 53,7X86X2,4-ST2K60BK-ZNPHR3F		0		NB
8	81.90714-0347	shim 53,7X86X2,5-ST2K60BK-ZNPHR3F		0		NB
8	81.90714-0348	shim 53,7X86X2,6-ST2K60BK-ZNPHR3F		0		NB
9	81.96503-0320	radial shaft seal		0		2
10	81.44205-0062	king pin V9-82L-98		0		2
11	06.56939-0016	toric seal 62X3N-NBR3-40		0		4
12	81.44208-0009	cover plate M8X1X68X5-ST37-2-ZNPHR3F		0		4
13	06.29020-0139	circlip 68X2,50-ZNPHR5F		0		4
14	06.38070-0102	hydraulic-type lube nipple AM8X1		0		4
15	81.91605-0041	cover B68,55/12-ST1303-A4C		0		4
16	81.90490-0479	screw M16X1,5X41X10-8.8-SW10-A3C		0		1
17	06.11185-0318	hexagon nut M16X1,5-8-A3C	0702	0		1
17	06.11271-6407	hexagon nut BM16X1,5-04-MAN183-B1		0		1
18	81.96002-0368	plug 18,1X31-24-PA6.6		0		2
19	81.97871-0056	data plate		0		1

17.12.2003	Type A51 00	Pet 04.92	Chassis No.	Group 440-4	Figure 44 0196
18:30	Table steering knuckle and bearings steering knuckle carrier		Reference No. 81.44001-7094 00.00 - 00.00 front axle VOS-08-B-01 right air sprung disc brake 22,5" + ABS		
Seite: 003					

Pos	Part No.	Description	Pat	ME	All	Stk
	81.44205-6031	repair kit king pin leading/trailing axle LKW/BUS >or >fig. >6 - 15		S		1 *

17.12.2003	Type A51 00	Pet 04.92	Chassis No.	Group 440-4	Figure 44 0196
18:31	Table steering knuckle and bearings steering knuckle carrier		Reference No. 81.44001-7095 00.00 - 00.00 front axle VOS-08-B-01 left air sprung disc brake 22,5" + ABS		
Seite: 001					

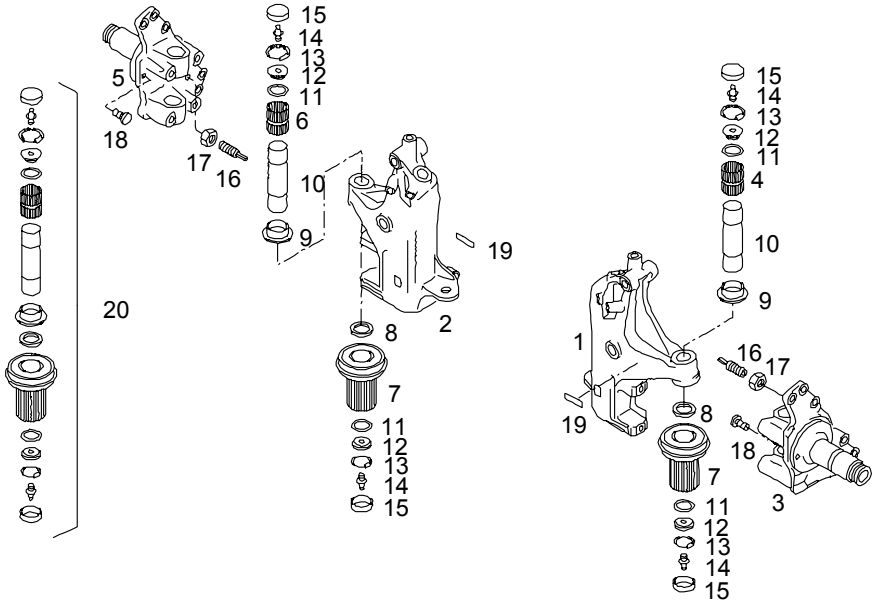

Pos	Part No.	Description	Pat	ME	All	Stk
1	81.44202-0075	steering knuckle carrier left		0		1
3	81.44201-6267	steering knuckle assembly left		0		1
4	06.33719-0101	>needle sleeve >50X60X59		0		1
7	81.93404-0066	needle sleeve		0		1
8	81.90714-0340	shim 53,7X86X1,8-ST2K60BK-ZNPHR3F		0		NB
8	81.90714-0341	shim 53,7X86X1,9-ST2K60BK-ZNPHR3F		0		NB
8	81.90714-0342	shim 53,7X86X2,0-ST2K60BK-ZNPHR3F		0		NB
8	81.90714-0343	shim 53,7X86X2,1-ST2K60BK-ZNPHR3F		0		NB

17.12.2003	Type A51 00	Pet 04.92	Chassis No.	Group 440-4	Figure 44 0196
18:31	Table steering knuckle and bearings steering knuckle carrier		Reference No. 81.44001-7095 00.00 - 00.00 front axle VOS-08-B-01 left air sprung disc brake 22,5" + ABS		
Seite: 002					

Pos	Part No.	Description	Pat	ME	All	Stk
8	81.90714-0344	shim 53,7X86X2,2-ST2K60BK-ZNPHR3F		0		NB
8	81.90714-0345	shim 53,7X86X2,3-ST2K60BK-ZNPHR3F		0		NB
8	81.90714-0346	shim 53,7X86X2,4-ST2K60BK-ZNPHR3F		0		NB
8	81.90714-0347	shim 53,7X86X2,5-ST2K60BK-ZNPHR3F		0		NB
8	81.90714-0348	shim 53,7X86X2,6-ST2K60BK-ZNPHR3F		0		NB
9	81.96503-0320	radial shaft seal		0		2
10	81.44205-0062	king pin V9-82L-98		0		2
11	06.56939-0016	toric seal 62X3N-NBR3-40		0		4
12	81.44208-0009	cover plate M8X1X68X5-ST37-2-ZNPHR3F		0		4
13	06.29020-0139	circlip 68X2,50-ZNPHR5F		0		4
14	06.38070-0102	hydraulic-type lube nipple AM8X1		0		4
15	81.91605-0041	cover B68,55/12-ST1303-A4C		0		4
16	81.90490-0479	screw M16X1,5X41X10-8.8-SW10-A3C		0		1
17	06.11185-0318	hexagon nut M16X1,5-8-A3C	0702	0		1
17	06.11271-6407	hexagon nut BM16X1,5-04-MAN183-B1		0		1
18	81.96002-0368	plug 18,1X31-24-PA6.6		0		2
19	81.97871-0056	data plate		0		1

17.12.2003	Type A51 00	Pet 04.92	Chassis No.	Group 440-4	Figure 44 0196
18:31	Table steering knuckle and bearings steering knuckle carrier		Reference No. 81.44001-7095 00.00 - 00.00 front axle VOS-08-B-01 left air sprung disc brake 22,5" + ABS		
Seite: 003					

Pos	Part No.	Description	Pat	ME	All	Stk
	81.44205-6031	repair kit king pin leading/trailing axle LKW/BUS >comprising: >fig. >4, 7 - 15		S		1 *

17.12.2003	Type A51 00	Pet 04.92	Chassis No.	Group 440-4	Figure 44 0174
18:34	Table tie rods make: LEMFOERDER		Reference No. 81.#0260-0573 00.00 - 00.00 locating system front axle V9-82SL/VOS-08-B-01 with stabilizer		
Seite: 001					

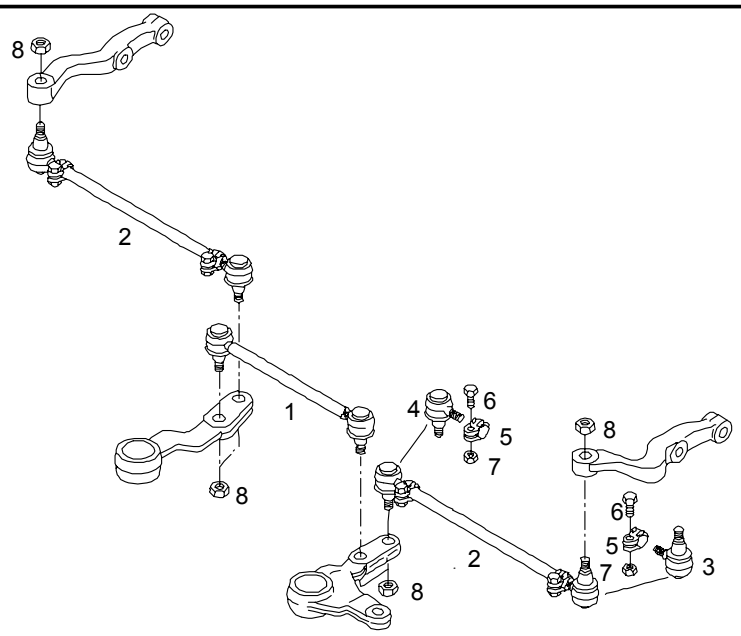

Pos	Part No.	Description	Pat	ME	All	Stk
1	81.46711-6877	tie rod inner		0		1
1	TE77106	tie rod TEMSA				
2	TE77105	tie rod TEMSA				
2	81.46711-6770	tie rod		0		2
3	81.95301-6275	>ball joint >assembly >l.h. thread		0		2
4	81.95301-6274	>ball joint >assembly >r.h. thread		0		2
5	81.95312-6013	>retaining clamp >assembly >A-38-QSTE340TM-LM		0		4
6	06.01519-0022	>>hex shoulder stud >>M12X1,5X62S-8.8-A-A3C		0		4
7	06.11240-0411	>>hex lock nut >>BM12X1,5-8-MAN183-B1		0		4

17.12.2003	Type A51 00	Pet 04.92	Chassis No.	Group 440-4	Figure 44 0174
18:34	Table tie rods make: LEMFOERDER		Reference No. 81.#0260-0573 00.00 - 00.00 locating system front axle V9-82SL/VOS-08-B-01 with stabilizer		
Seite: 002					

Pos	Part No.	Description	Pat	ME	All	Stk
8	81.90685-0385	hex lock nut M24X1,5-15-C45V-MNPHR5F		0		6

17.12.2003	Type A51 00	Pet 04.92	Chassis No.	Group 440-4	Figure 44 0077
18:35	Table track arm		Reference No. 81.44001-7094 00.00 - 00.00 front axle VOS-08-B-01 right air sprung disc brake 22,5" + ABS		
Seite: 001					

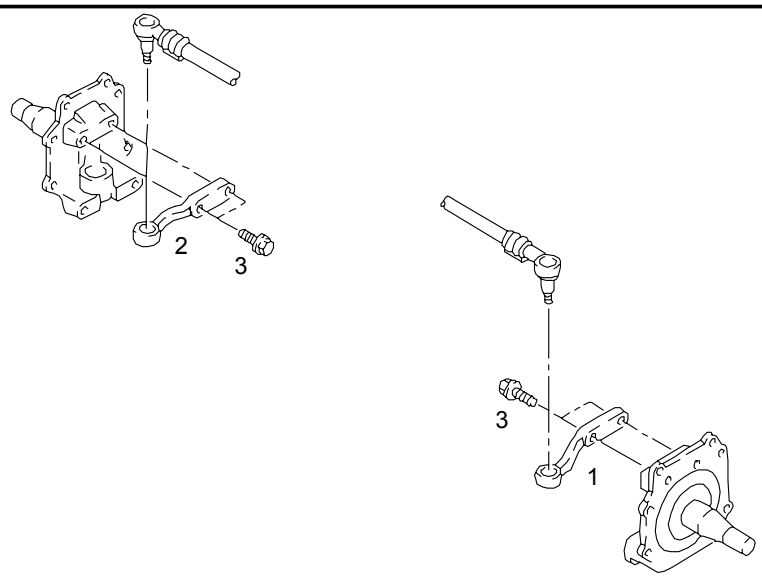

Pos	Part No.	Description	Pat	ME	All	Stk
2	81.46701-0328	track arm right		0		1
3	06.02229-0002	cylinder screw with internal torx M22X1,5X90-10.9-T100		0		2

17.12.2003	Type A51 00	Pet 04.92	Chassis No.	Group 440-4	Figure 44 0077
18:35	Table track arm		Reference No. 81.44001-7095 00.00 - 00.00 front axle VOS-08-B-01 left air sprung disc brake 22,5" + ABS		
Seite: 001					

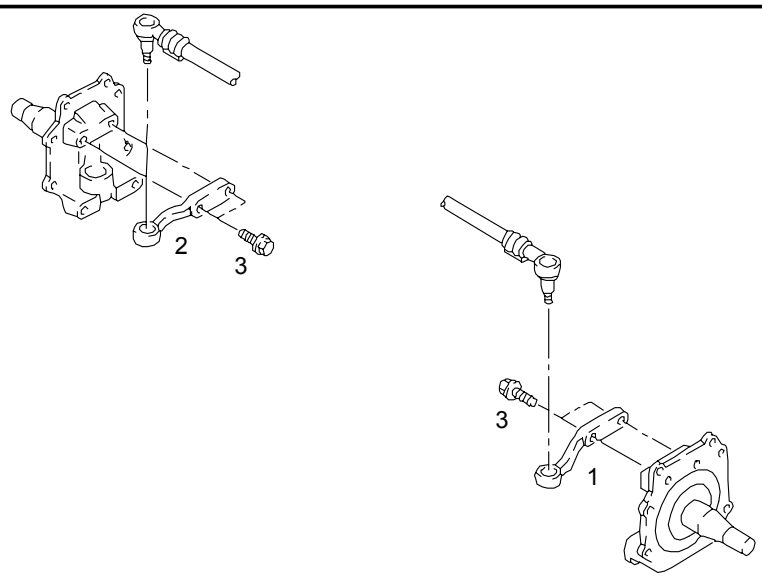

Pos	Part No.	Description	Pat	ME	All	Stk
1	81.46701-0329	track arm left		0		1
3	06.02229-0002	cylinder screw with internal torx M22X1,5X90-10.9-T100		0		2

10 ARKA AKS
REAR AXLE
x

10-010	Arka aks Rear Axle x	TB162W TB163W	TB162Z TB163Z	TB162X TB163X	TB162Y TB163Y

TEMSA	Arka aks Rear axle	Drw.no: Vehicle Model: **TB162W, TB162Z, TB162X, TB162Y** **TB163W, TB163Z, TB163X, TB163Y**	**10-010** RevDate: Page: 1

Pos	Part Number	Turkish	English	German	Qty	R/P	From	Up To	Original Number Supplier
1	HOY-1175-02	ARKA AKS	REAR AXLE		1		1	??	MAN
1	HOY-1175-03	ARKA AKS	REAR AXLE		1		??		MAN

18.12.2003	Type A51 00	Pet 04.92	Chassis No.	Group 350-0	Figure 35 0132
9:07	Table axle housing with differential lock		Reference No. 81.35010-6126 00.00 - 00.00 driving head HOY-1175 I=4,625 Z=37:8 flange 155MM		
Seite: 001					

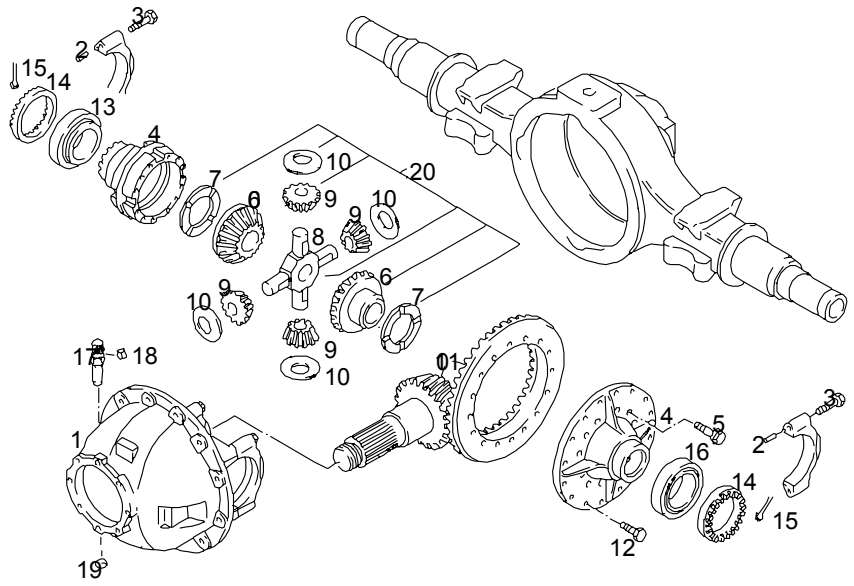

Pos	Part No.	Description	Pat	ME	All	Stk
1	81.35301-6083	>axle housing >assembly		0		1
2	06.22022-3010	>>dowel pin >>8H8X16-ST50-2K		0		4
3	06.01494-4720	>>hex shoulder stud >>M18X2X110-10.9-SCHLUSSG.-MAN18		0		4
4	81.35100-6602	>differential housing >assembly		0		1
5	06.01494-4419	>>hex shoulder stud >>M14X1,5X100-10.9-MAN183-PHR		0		12
6	81.35106-0040	>axle shaft gear		0		2
7	81.35613-0041	>thrust washer		0		2
8	81.35608-0020	>differential spider		0		1
9	81.35108-0067	>differential bevel gear		0		4

18.12.2003	Type A51 00	Pet 04.92	Chassis No.	Group 350-0	Figure 35 0132
9:07	Table axle housing with differential lock		Reference No. 81.35010-6126 00.00 - 00.00 driving head HOY-1175 I=4,625 Z=37:8 flange 155MM		
Seite: 002					

Pos	Part No.	Description	Pat	ME	All	Stk
10	81.90701-0960	>retaining washer		0		4
11	81.35199-6518	>bevel gear >with drive bevel gear >Z=37:8 >lapped		S		1
12	06.02813-5012	>hex lock screw >M16X1,5X35-10.9-MAN183-B1		0		16
13	06.32499-0188	>taper roller bearing >33021-580938		0		1
14	81.35125-0023	>ring		0		2
15	06.16020-6914	>cotter pin >6,3X32-ST-A4C		0		2
16	06.32489-0071	>taper roller bearing >32021-X-F22		0		1
17	81.35306-0034	>plug connection		0		1
18	81.98181-0160	>>clamping ring >>6		0		1
19		>>deleted				*
20	81.35107-6019	repair kit for compensation HY/HDY/HOY-1175/HYD-1370 asbestos-free		S		1

18.12.2003	Type A51 00	Pet 04.92	Chassis No.	Group 350-0	Figure 44 0105
9:09	Table brake lining normal TEXTAR		Reference No. 81.50800-7008 00.00 - 16.97 disc brake D-ELSA T3010 HOY-1175-02		
Seite: 001					

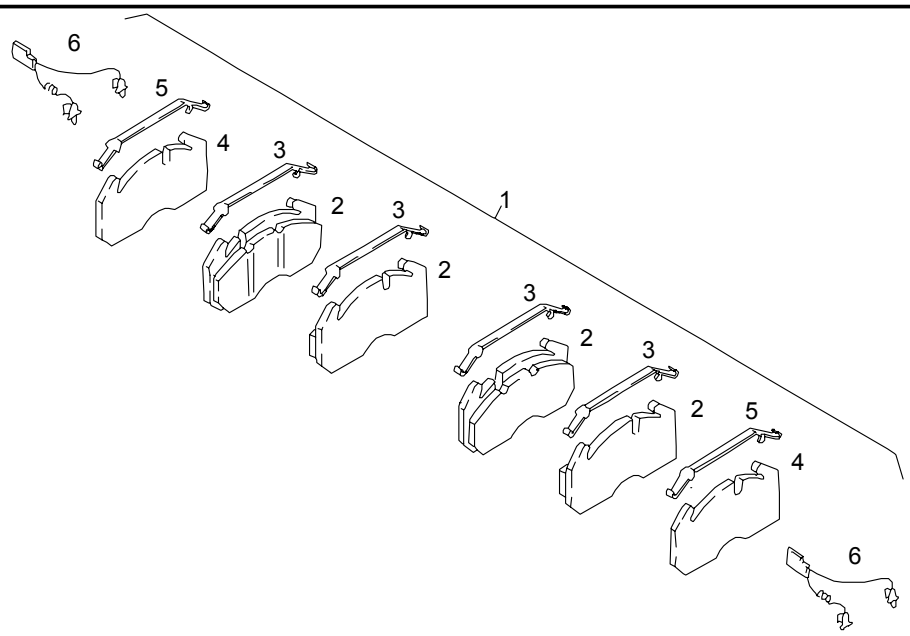

Pos	Part No.	Description	Pat	ME	All	Stk
		note: in parts set contained				*
		brake lining left/right only 1 X				*
		order				*
1	81.50820-6004	brake lining set TEXTAR T3010-3AL normal	1397	S		1
1	81.50820-6014	brake lining set TEXTAR T3010 3AL normal		S		1
2	81.50820-5020	>brake pad >TEXTAR T3010 3AL >normal	1397	0		4

18.12.2003	Type A51 00	Pet 04.92	Chassis No.	Group 350-0	Figure 44 0105
9:09	Table brake lining normal TEXTAR		Reference No. 81.50800-7008 00.00 - 16.97 disc brake D-ELSA T3010 HOY-1175-02		
Seite: 002					

Pos	Part No.	Description	Pat	ME	All	Stk
3	81.50808-0003	>spring clip >8 MM	1397	0		4
4		>deleted				*
5	81.50808-0003	>spring clip >8 MM	1397	0		2
6		>deleted				*

18.12.2003	Type A51 00	Pet 04.92	Chassis No.	Group 350-0	Figure 35 0390
9:11	Table brake pad wear indicator with mounting sensor		Reference No. 88.#0340-0003 00.00 - 00.00 HOY-1175-02 disc brake 22,5" + ABS		
Seite: 001					

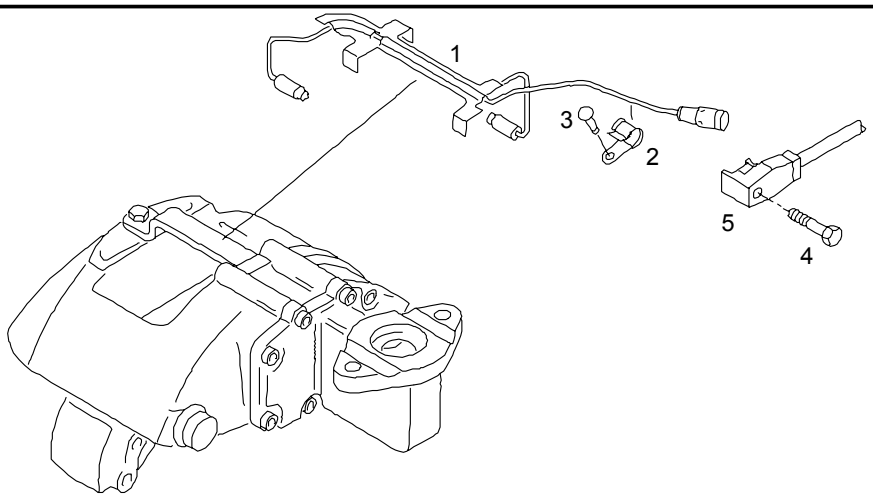

Pos	Part No.	Description	Pat	ME	All	Stk
1	81.50822-6016	repair kit brake pad wear indicator 342MM		S		2
2	81.50822-0013	clip		0		2
3	06.22100-0909	oval grooved pin 6X16-ST		0		2
4	06.01013-7112	hex shoulder stud M8X35-8.8-MAN183-B1		0		1
5		see group 250/0: looms brake pad wear indicator				*

18.12.2003	Type A51 00	Pet 04.92	Chassis No.	Group 350-0	Figure 35 0506
9:14	Table disc brake caliper		Reference No. 88.#0340-0003 00.00 - 00.00 HOY-1175-02 disc brake 22,5" + ABS		
Seite: 001					

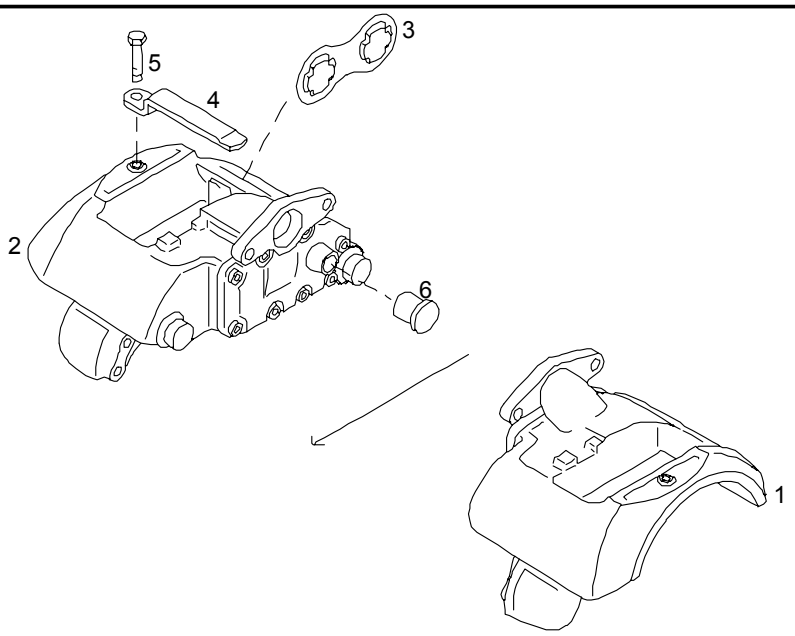

Pos	Part No.	Description	Pat	ME	All	Stk
1	81.50804-6198	disc brake caliper assembly without lining		0		1
2	81.50804-6197	disc brake caliper assembly without lining		0		1
3	81.50822-0006	piston retaining plate		0		2
4	81.50822-0007	retainer		0		2
5	06.01771-8107	hex bolt M10X1,25X20-8.8-A3C		0		2
6	81.50810-0003	dust cap		0		2

18.12.2003	Type A51 00	Pet 04.92	Chassis No.	Group 350-0	Figure 35 0355
9:14	Table disc brake caliper intermediate flange		Reference No. 81.35003-7007 00.00 - 00.00 HOY-1175-02 disc brake + ABS		
Seite: 001					

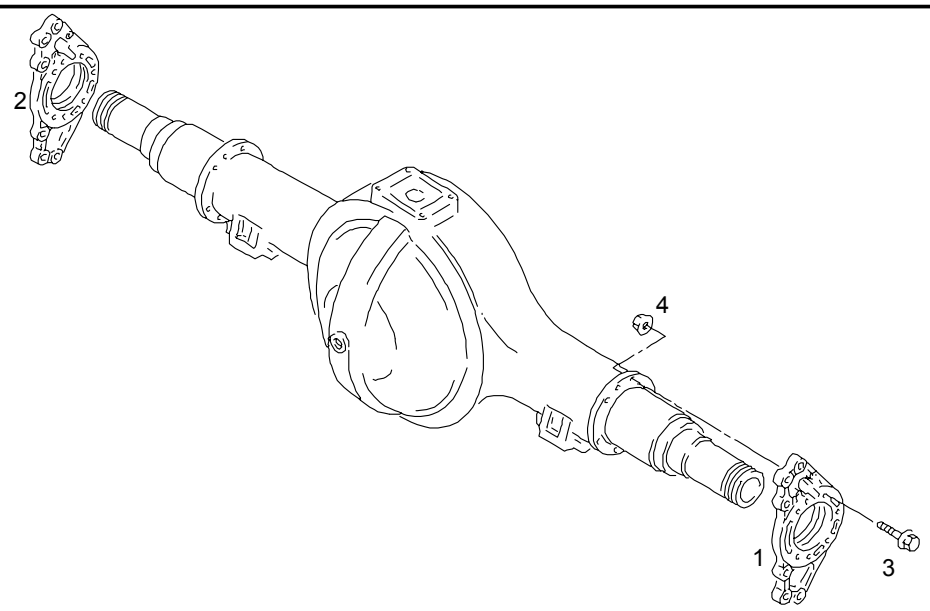

Pos	Part No.	Description	Pat	ME	All	Stk
1	81.50825-0003	intermediate flange left		0		1
2	81.50825-0002	intermediate flange right		0		1
3	06.02813-5021	hex lock screw M16X1,5X80-10.9-MAN183-B1		0		14
4	06.11251-2008	hex lock nut M16X1,5-10-MAN183-B1		0		14

18.12.2003	Type A51 00	Pet 04.92	Chassis No.	Group 350-0	Figure 35 0509
9:15	Table disc brake caliper mounting		Reference No. 81.35003-7007 00.00 - 00.00 HOY-1175-02 disc brake + ABS		
Seite: 001					

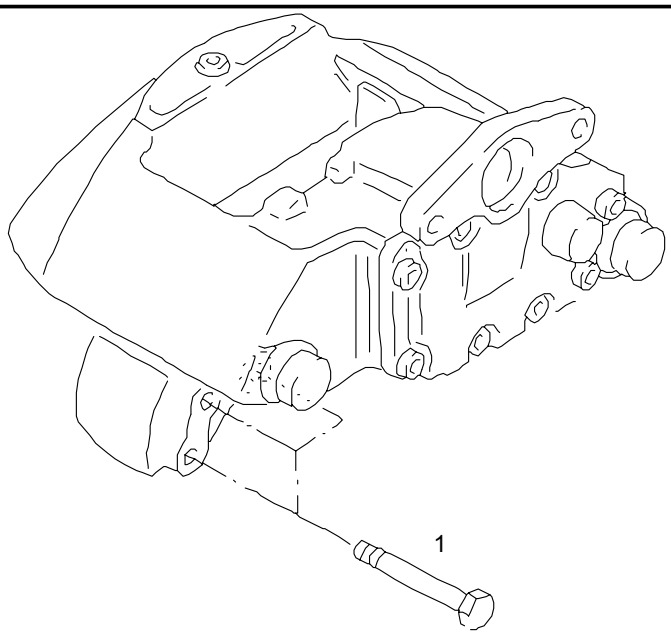

Pos	Part No.	Description	Pat	ME	All	Stk
1	06.01494-4611	hex shoulder stud M18X1,5X60-10.9-MAN183-PHR		0		12

18.12.2003	Type A51 00	Pet 04.92	Chassis No.	Group 350-0	Figure 35 0509
9:15	Table disc brake caliper mounting		Reference No. 81.35003-7221 00.00 - 00.00 rear axle HOY-1175-03 disc brake 22,5" + ABS		
Seite: 001					

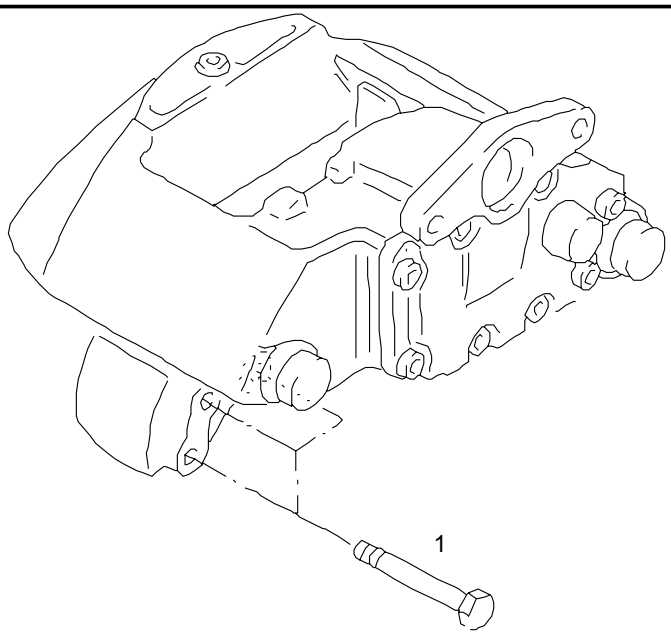

Pos	Part No.	Description	Pat	ME	All	Stk
1	06.01494-4612	hex shoulder stud M18X1,5X65-10.9-MAN183-PHR		0		12

18.12.2003	Type A51 00	Pet 04.92	Chassis No.	Group 350-0	Figure 44 0140
9:16	Table disc brake caliper repair kits		Reference No. 88.#0340-0003 00.00 - 00.00 HOY-1175-02 disc brake 22,5" + ABS		
Seite: 001					

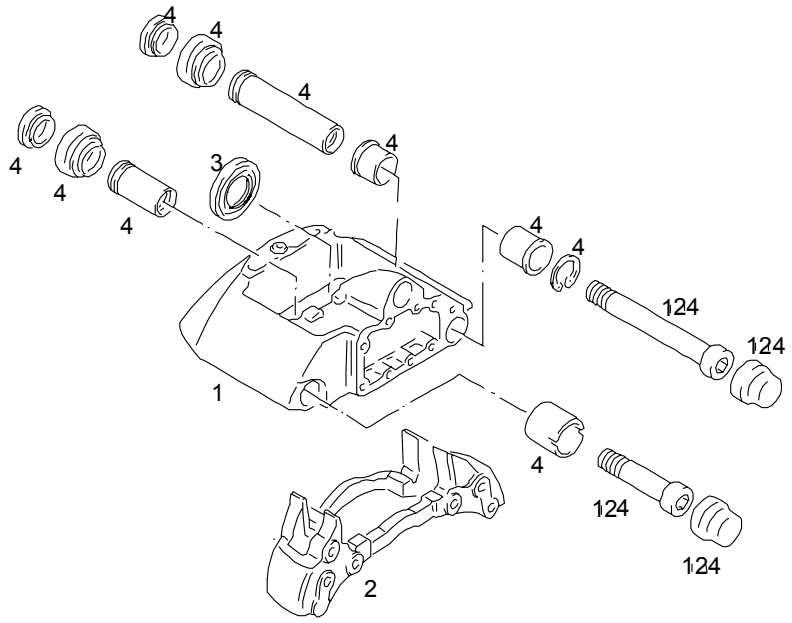

Pos	Part No.	Description	Pat	ME	All	Stk
1		deleted				*
2	81.50802-6015	brake anchor plate assembly		0		2
3	81.50802-6016	repair kit tappet asbestos-free		S		2
		deleted				*

18.12.2003	Type A51 00	Pet 04.92	Chassis No.	Group 350-0	Figure 44 0139
9:16	Table disc brake caliper with brake lining TEXTAR		Reference No. 81.50800-7008 00.00 - 16.97 disc brake D-ELSA T3010 HOY-1175-02		
Seite: 001					

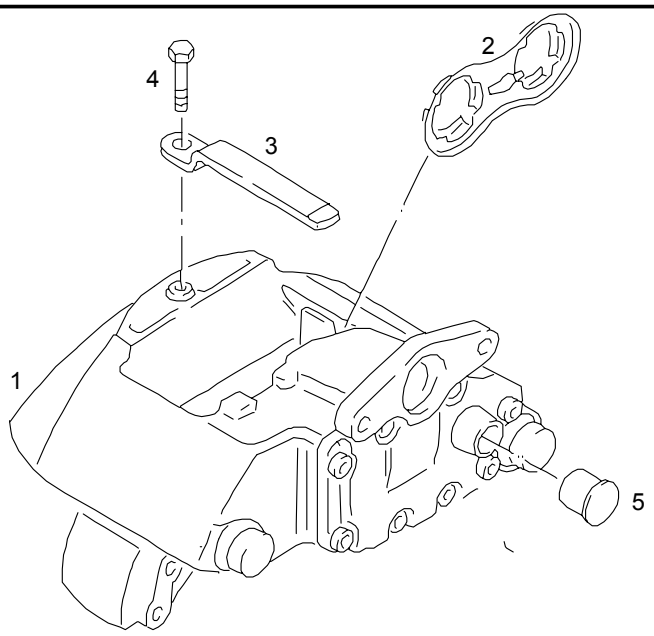

Pos	Part No.	Description	Pat	ME	All	Stk
1	81.50804-6065	disc brake caliper assembly left with lining	1397	0		1
1	81.50804-6081	disc brake caliper assembly left with lining >is >with/for >bus >A01,A02,A03,A33 >on >rear axle >right >installed		0		1 * *

18.12.2003	Type A51 00	Pet 04.92	Chassis No.	Group 350-0	Figure 44 0139
9:16	Table disc brake caliper with brake lining TEXTAR		Reference No. 81.50800-7008 00.00 - 16.97 disc brake D-ELSA T3010 HOY-1175-02		
Seite: 002					

Pos	Part No.	Description	Pat	ME	All	Stk
1	81.50804-6066	disc brake caliper assembly right with lining	1397	0		1
1	81.50804-6082	disc brake caliper assembly right with lining		0		1
		>is >with/for >bus >A01,A02,A03,A33				*
		>on >rear axle >left >installed				*
2	81.50822-0006	>piston retaining plate		0		2
3	81.50822-0007	>retainer		0		2
4	06.01771-8107	>hex bolt >M10X1,25X20-8.8-A3C		0		2
5	81.50810-0003	>dust cap		0		2
		>>see plate: >>brake lining >>normal				*
		>>or >>brake lining >>repair stage 1				*

18.12.2003	Type A51 00	Pet 04.92	Chassis No.	Group 350-0	Figure 35 0133
9:17	Table drive shaft cover		Reference No. 81.35200-7185 00.00 - 00.00 without differential lock HOY-1175-03		
Seite: 001					

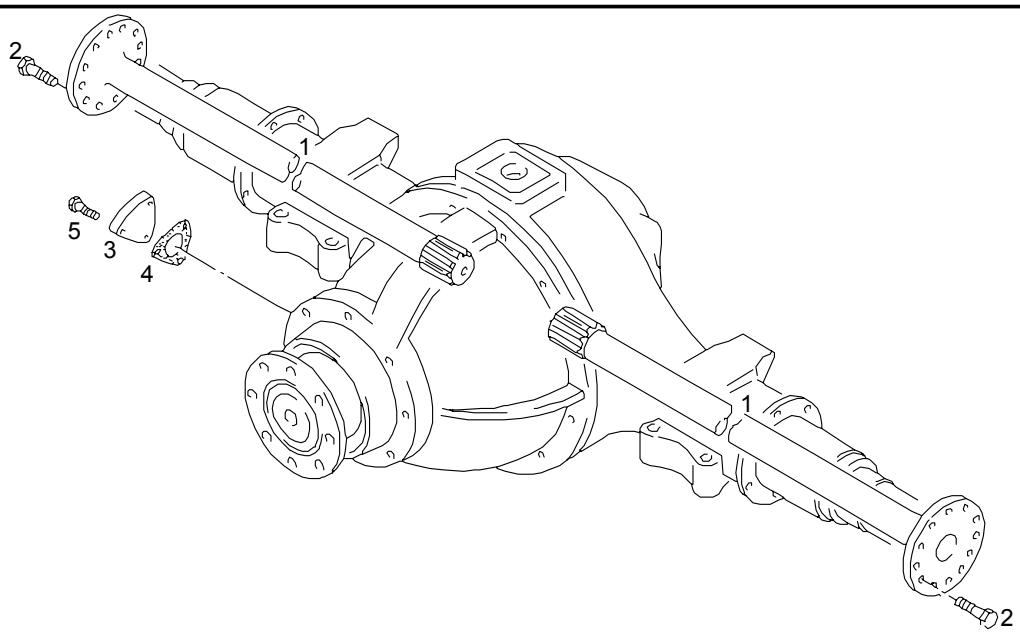

Pos	Part No.	Description	Pat	ME	All	Stk
1	81.35502-0156	drive shaft without blocking teeth		0		2
2	06.02814-3013	hex lock screw M16X1,5X40-100-MAN183-PHR		0		20
3	81.35406-0003	cover		0		1
4	81.96601-0627	gasket 48X0,5-3X9-L=65MM asbestos-free		0		1
5	06.01303-3113	hex bolt M8X20SK-8.8-MAN183-A2C		0		3

18.12.2003	Type A51 00	Pet 04.92	Chassis No.	Group 350-0	Figure 35 0127
9:18	Table drive shaft differential lock		Reference No. 81.35200-7184 00.00 - 00.00 with differential lock HOY-1175-03		
Seite: 001					

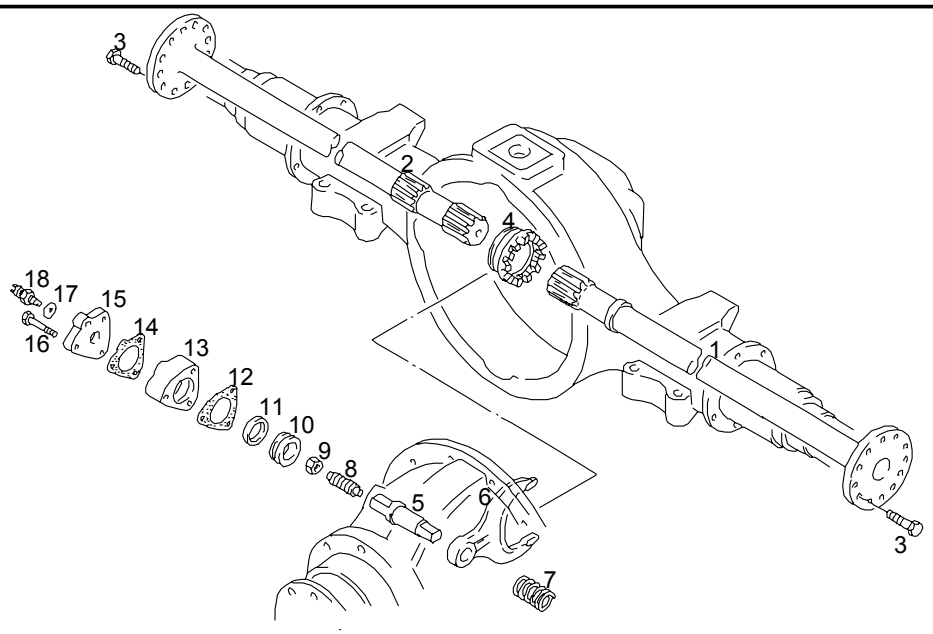

Pos	Part No.	Description	Pat	ME	All	Stk
1	81.35502-0155	drive shaft with blocking teeth		0		1
2	81.35502-0155	drive shaft with blocking teeth		0		1
3	06.02814-3013	hex lock screw M16X1,5X40-100-MAN183-PHR		0		20
4	81.35202-0028	shift sleeve		0		1
5	81.35619-0003	selector shaft		0		1
6	81.35614-0016	selector fork		0		1
7	81.97601-0689	pressure spring 3,6X27X58		0		1
8	06.06073-1414	threaded pin M10X25-14H		0		1
9	06.11271-6211	hexagon nut BM10-04-MAN183-B1		0		1

18.12.2003	Type A51 00	Pet 04.92	Chassis No.	Group 350-0	Figure 35 0127
9:18	Table drive shaft differential lock		Reference No. 81.35200-7184 00.00 - 00.00 with differential lock HOY-1175-03		
Seite: 002					

Pos	Part No.	Description	Pat	ME	All	Stk
10	81.35634-0011	shift cylinder piston		0		1
11	06.56331-3274	toric seal 36X5B-NBR3-70		0		1
12	81.96601-0627	gasket 48X0,5-3X9-L=65MM asbestos-free		0		1
13	81.35631-0006	shift cylinder		0		1
14	81.96601-0146	gasket asbestos-free	1800	0		1
15	81.35636-0003	cover	1800	0		1
16	06.01013-7119	hex shoulder stud M8X70-8.8-MAN183-B1		0		3
17	06.56190-0812	seal A18X22-AL		0		1
		>>see plate: >>pressure switch >>for differential lock				*

18.12.2003	Type A51 00	Pet 04.92	Chassis No.	Group 350-0	Figure 35 0130
9:19	Table driving head		Reference No. 81.35010-6126 00.00 - 00.00 driving head HOY-1175 I=4,625 Z=37:8 flange 155MM		
Seite: 001					

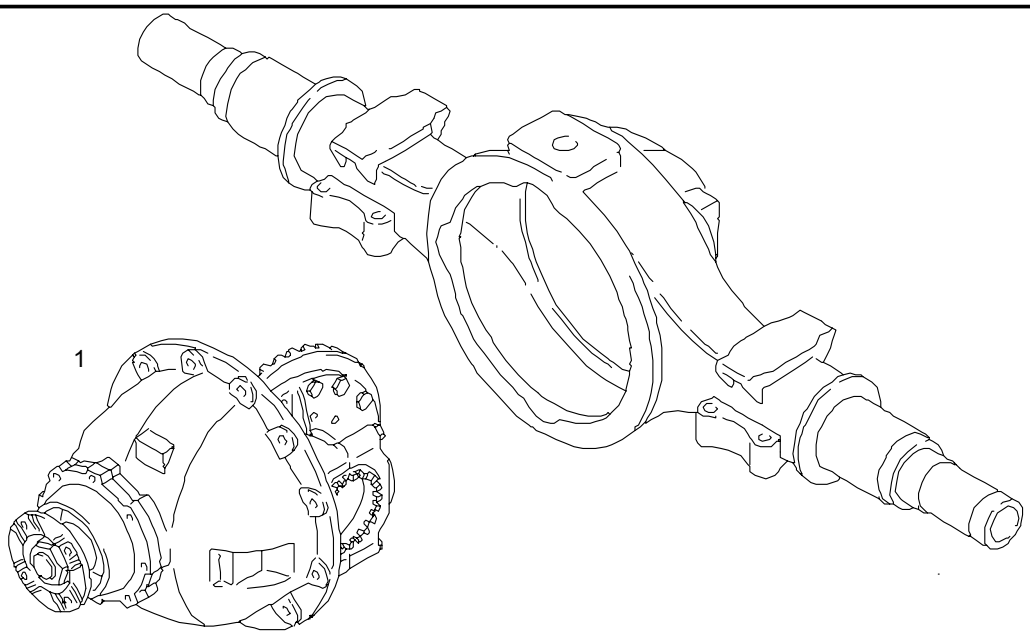

Pos	Part No.	Description	Pat	ME	All	Stk
1	81.35010-6126	driving head IK=4,625 Z=37: 8 KR155 TR425 ground		0		1
2		deleted				*

18.12.2003	Type A51 00	Pet 04.92	Chassis No.	Group 350-0	Figure 35 0124
9:20	Table driving head mounting		Reference No. 81.35003-7221 00.00 - 00.00 rear axle HOY-1175-03 disc brake 22,5" + ABS		
Seite: 001					

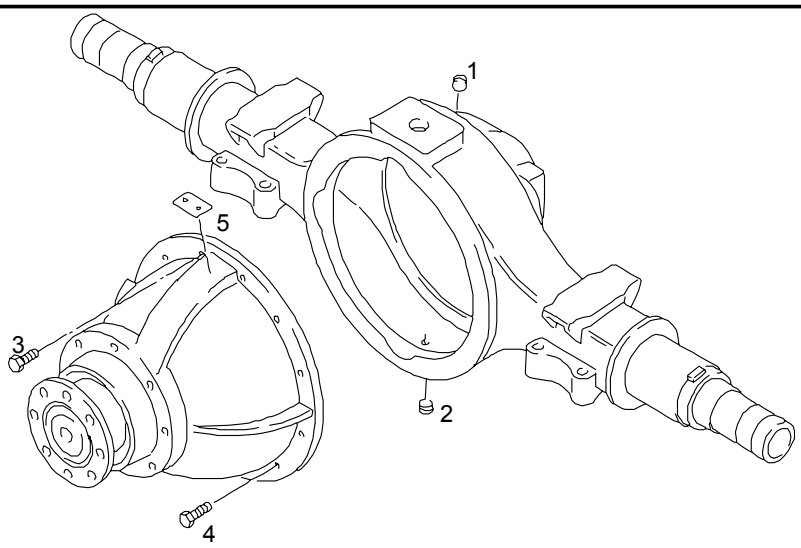

Pos	Part No.	Description	Pat	ME	All	Stk
1	81.90310-0179	drain plug M24X1,5-5.8-SW14		0		1
2	81.90301-0025	drain plug M24X1,5-5.8-PM-SW14-A3C		0		1
3	06.02839-0009	hex lock screw M14X1,5X50K-MK5X10-10.9-MAN183		0		6
4	06.02839-0009	hex lock screw M14X1,5X50K-MK5X10-10.9-MAN183		0		6
5	81.97850-0383	data plate		0		1

18.12.2003	Type A51 00	Pet 04.92	Chassis No.	Group 350-0	Figure 35 0131
9:21	Table pinion case bevel gear bearing		Reference No. 81.35010-6126 00.00 - 00.00 driving head HOY-1175 I=4,625 Z=37:8 flange 155MM		
Seite: 001					

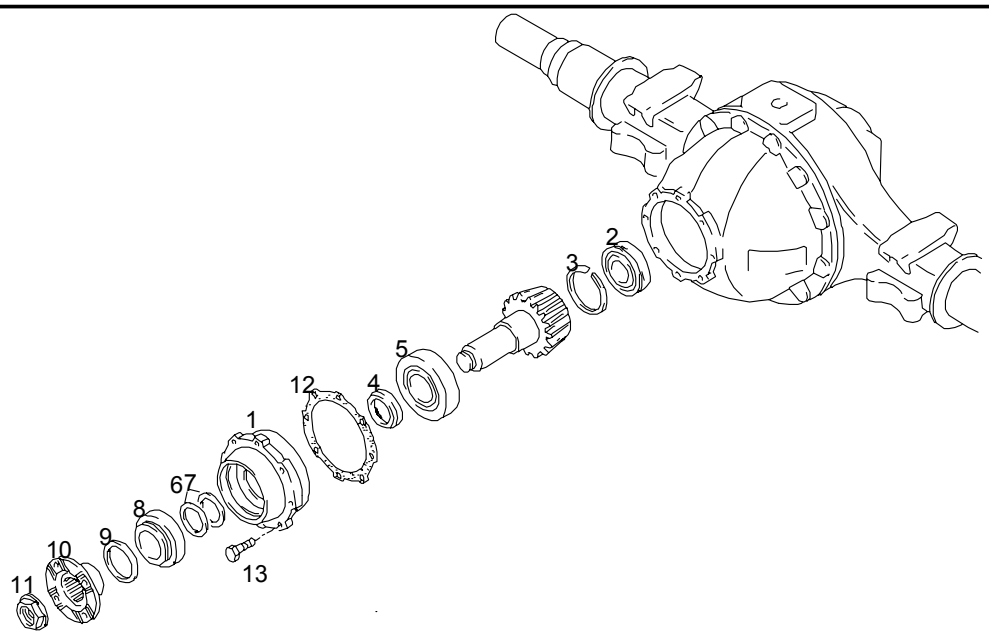

Pos	Part No.	Description	Pat	ME	All	Stk
1	81.35601-0031	>pinion case		0		1
2	06.32609-0064	>roller bearing		0		1
3		>>deleted				*
4	81.91701-0409	>spacer bush		0		1
5	06.32489-0069	>taper roller bearing >70X165X57		0		1
6	81.90770-0120	>washer >60X73X3,7-C60		0		NB
6	81.90770-0121	>washer >60X73X3,8-C60		0		NB
6	81.90770-0122	>washer >60X73X3,9-C60		0		NB
6	81.90770-0123	>washer >60X73X4-C60		0		NB

18.12.2003	Type A51 00	Pet 04.92	Chassis No.	Group 350-0	Figure 35 0131
9:21	Table pinion case bevel gear bearing		Reference No. 81.35010-6126 00.00 - 00.00 driving head HOY-1175 I=4,625 Z=37:8 flange 155MM		
Seite: 002					

Pos	Part No.	Description	Pat	ME	All	Stk
6	81.90770-0124	>washer >60X73X4,1-C60		0		NB
6	81.90770-0125	>washer >60X73X4,2-C60		0		NB
6	81.90770-0126	>washer >60X73X4,3-C60		0		NB
6	81.90770-0127	>washer >60X73X4,35-C60		0		NB
6	81.90770-0128	>washer >60X73X4,4-C60		0		NB
6	81.90770-0129	>washer >60X73X4,425-C60		0		NB
6	81.90770-0130	>washer >60X73X4,45-C60		0		NB
6	81.90770-0131	>washer >60X73X4,475-C60		0		NB
6	81.90770-0132	>washer >60X73X4,5-C60		0		NB
6	81.90770-0133	>washer >60X73X4,525-C60		0		NB
6	81.90770-0134	>washer >60X73X4,55-C60		0		NB
6	81.90770-0135	>washer >60X73X4,575-C60		0		NB
6	81.90770-0136	>washer >60X73X4,6-C60		0		NB
6	81.90770-0137	>washer >60X73X4,625-C60		0		NB
6	81.90770-0138	>washer >60X73X4,65-C60		0		NB
7	81.90770-0139	>washer >60X73X4,675-C60		0		NB

18.12.2003	Type A51 00	Pet 04.92	Chassis No.	Group 350-0	Figure 35 0131
9:21	Table pinion case bevel gear bearing		Reference No. 81.35010-6126 00.00 - 00.00 driving head HOY-1175 I=4,625 Z=37:8 flange 155MM		
Seite: 003					

Pos	Part No.	Description	Pat	ME	All	Stk
7	81.90770-0140	>washer >60X73X4,7-C60		0		NB
7	81.90770-0141	>washer >60X73X4,725-C60		0		NB
7	81.90770-0142	>washer >60X73X4,75-C60		0		NB
7	81.90770-0143	>washer >60X73X4,775-C60		0		NB
7	81.90770-0144	>washer >60X73X4,8-C60		0		NB
7	81.90770-0145	>washer >60X73X4,85-C60		0		NB
7	81.90770-0146	>washer >60X73X4,9-C60		0		NB
7	81.90770-0147	>washer >60X73X4,95-C60		0		NB
7	81.90770-0148	>washer >60X73X5-C60		0		NB
7	81.90770-0149	>washer >60X73X5,05-C60		0		NB
7	81.90770-0150	>washer >60X73X5,1-C60		0		NB
7	81.90770-0151	>washer >60X73X5,2-C60		0		NB
7	81.90770-0152	>washer >60X73X5,3-C60		0		NB
8	06.32499-0087	>taper roller bearing >31312-A		0		1
9	06.56289-0293	>radial shaft seal >80X154X18/19RD-FPM		0		1

18.12.2003	Type A51 00	Pet 04.92	Chassis No.	Group 350-0	Figure 35 0131	
9:21	Table pinion case bevel gear bearing			Reference No. 81.35010-6126 00.00 - 00.00 driving head HOY-1175 I=4,625 Z=37:8 flange 155MM		
Seite: 004						

Pos	Part No.	Description	Pat	ME	All	Stk
10	81.39115-5071	>driving flange >assembly >155MM >cross serration		0		1
11	81.90685-0311	>12-point collar nut >M45X1,5-CK45V-SW55-DBL9400.00		0		1
12	81.90701-0953	>shim >0,10MM		0		NB
12	81.90701-0954	>shim >0,15MM		0		NB
12	81.90701-0955	>shim >0,20MM		0		NB
12	81.90701-0956	>shim >0,35MM		0		NB
12	81.90701-0957	>shim >0,50MM		0		NB
12	81.90701-0958	>shim >1,00MM		0		NB
12	81.90701-0959	>shim >1,50MM		0		NB
13	06.02813-4913	>hex lock screw >M14X1,5X40-10.9-MAN183-B1		0		8

18.12.2003	Type A51 00	Pet 04.92	Chassis No.	Group 350-0	Figure 35 0260
9:22	Table rear dead axle		Reference No. 81.35003-7007 00.00 - 00.00 HOY-1175-02 disc brake + ABS		
Seite: 001					

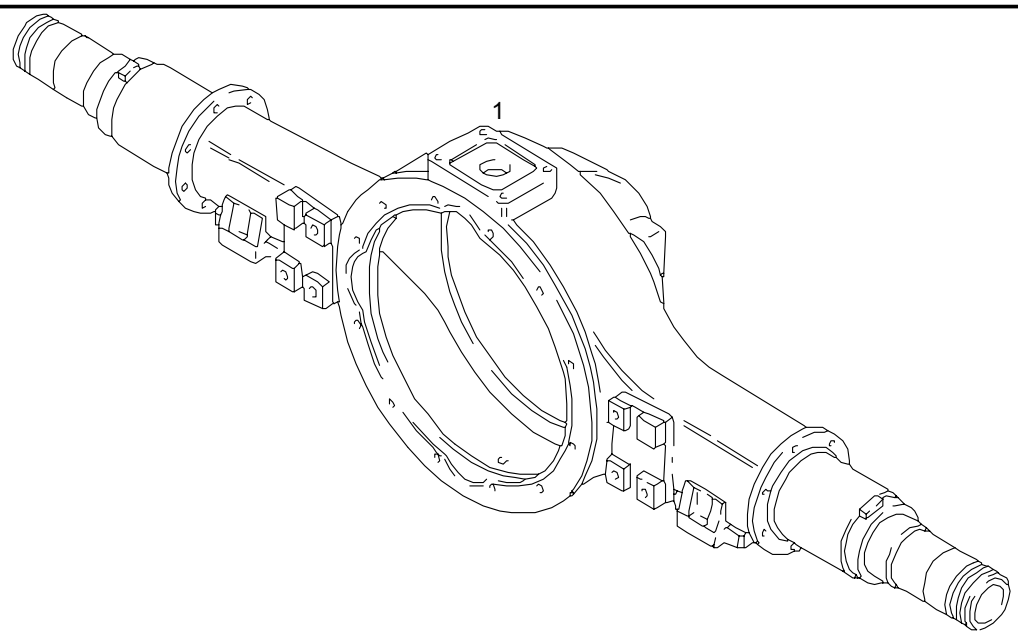

Pos	Part No.	Description	Pat	ME	All	Stk
1	81.35401-5406	rear dead axle assembly		0		1

18.12.2003	Type A51 00	Pet 04.92	Chassis No.	Group 350-0	Figure 35 0402	
9:22	Table rear dead axle			Reference No. 81.35003-7221 00.00 - 00.00 rear axle HOY-1175-03 disc brake 22,5" + ABS		
Seite: 001						

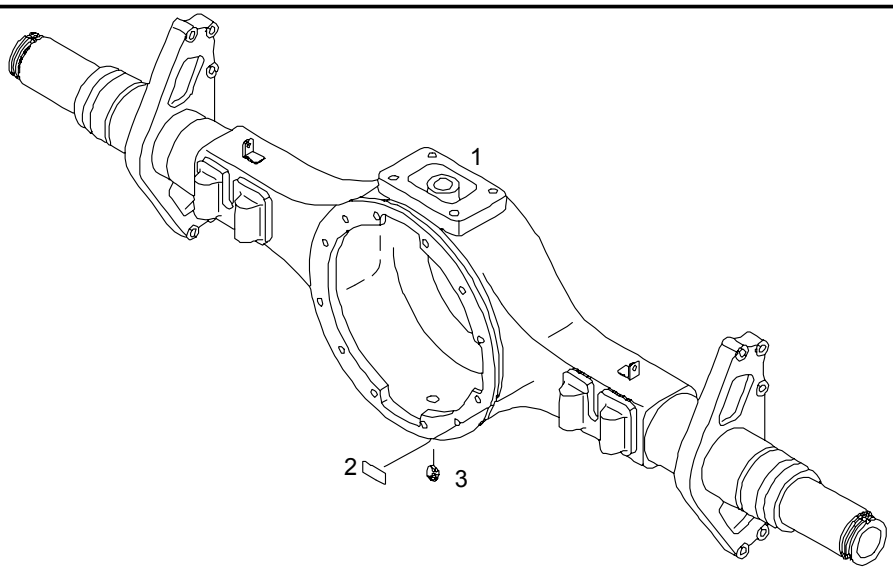

Pos	Part No.	Description	Pat	ME	All	Stk
1	81.35401-5454	rear dead axle HOY-1175-03		0		1
		fig. 2 - 3 see plate: driving head				*
		mounting				*

18.12.2003	Type A51 00	Pet 04.92	Chassis No.	Group 350-0	Figure 35 0357
9:23	Table rear wheel hub		Reference No. 81.35003-7007 00.00 - 00.00 HOY-1175-02 disc brake + ABS		
Seite: 001					

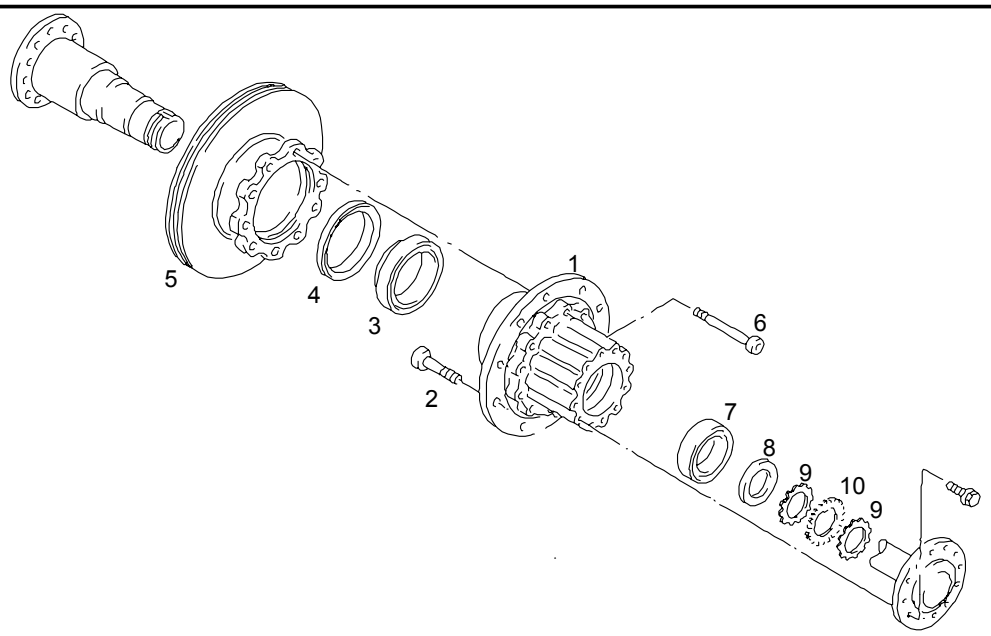

Pos	Part No.	Description	Pat	ME	All	Stk
1	81.35701-0152	rear wheel hub		0		2
2	81.45501-0164	wheel mounting bolt M22X1,5X44X77-10.9-MAN183-B2		0		20
3	06.32499-0188	taper roller bearing 33021-580938		0		2
4	81.96503-0260	cassette radial shaft seal 135X175X18-FPM/ACM		0		2
5	81.50803-0048	brake disc 22,5" Z=100 ABS		0		2
6	06.02191-2826	cylinder screw M16X1,5X140-10.9-ZNPHR3F		0		20
7	06.32499-0036	taper roller bearing 33019		0		2
8	81.90712-0819	thrust washer		0		2

18.12.2003	Type A51 00	Pet 04.92	Chassis No.	Group 350-0	Figure 35 0357	
9:23	Table rear wheel hub			Reference No. 81.35003-7007 00.00 - 00.00 HOY-1175-02 disc brake + ABS		
Seite: 002						

Pos	Part No.	Description	Pat	ME	All	Stk
9	81.90620-0048	lock ring M88X1,5		0		4
10	81.90801-0224	lock washer 88,5X100X2X10C11-UST37-2		0		2

18.12.2003	Type A51 00	Pet 04.92	Chassis No.	Group 350-0	Figure 35 0404
9:34	Table rear wheel hub brake disc		Reference No. 81.35003-7221 00.00 - 00.00 rear axle HOY-1175-03 disc brake 22,5" + ABS		
Seite: 001					

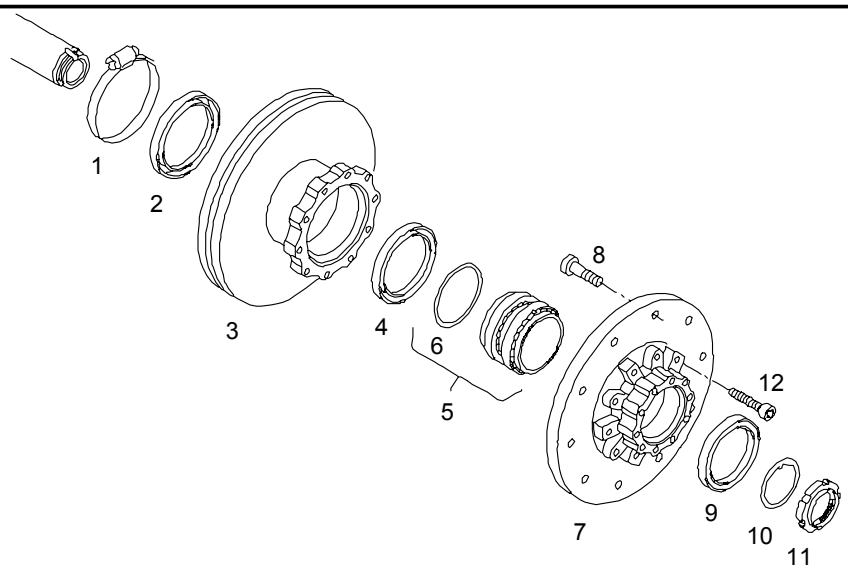

Pos	Part No.	Description	Pat	ME	All	Stk
1	06.67128-6344	hose clamp AS141-160M		0		2
2	81.35440-5015	bracket speed sender		0		2
3	81.50803-0041	brake disc 22,5"		0		2
4	81.96503-0333	cassette radial shaft seal 132X172X12WD-FPM-Z=100-M.IMPUL with pulse wheel		0		2
5	81.93420-0342	taper roller bearing 105X160X140		0		2
6	06.56341-3245	>toric seal >109,2X5,7B-NBR3-70		0		2
7	81.35701-0155	rear wheel hub HY-1344		0		2

18.12.2003	Type A51 00	Pet 04.92	Chassis No.	Group 350-0	Figure 35 0404
9:34	Table rear wheel hub brake disc		Reference No. 81.35003-7221 00.00 - 00.00 rear axle HOY-1175-03 disc brake 22,5" + ABS		
Seite: 002					

Pos	Part No.	Description	Pat	ME	All	Stk
8	81.45501-0164	wheel mounting bolt M22X1,5X44X77-10.9-MAN183-B2		0		20
9	06.56289-0387	radial shaft seal 132X160X10WD-FPM		0		2
10	81.90714-0249	thrust washer		0		2
11	81.90620-0092	lock ring M100X1,5		0		2
12	06.02191-2822	cylinder screw M16X1,5X100-10.9-MAN183-PHR		0		20

18.12.2003	Type A51 00	Pet 04.92	Chassis No.	Group 350-0	Figure 35 0484
9:35	Table speed sender		Reference No. 81.#4310-0213 00.00 - 00.00 ABS - sensors BOSCH for VA/HA HOY-1175-03		
Seite: 001					

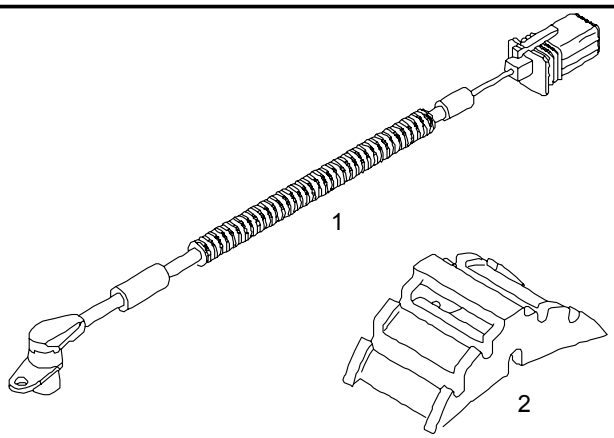

Pos	Part No.	Description	Pat	ME	All	Stk
1	81.27120-6101	speed sender assembly left L=2070	2602	0		1
1	81.27120-6119	speed sender assembly left L=2070		0		1
1	81.27120-6102	speed sender assembly right L=2070	2602	0		1
1	81.27120-6120	speed sender assembly right L=2070		0		1
2	81.25441-0816	clamp		0		2

18.12.2003	Type A51 00	Pet 04.92	Chassis No.	Group 350-0	Figure 35 0356
9:35	Table speed sender bracket		Reference No. 81.35003-7007 00.00 - 00.00 HOY-1175-02 disc brake + ABS		
Seite: 001					

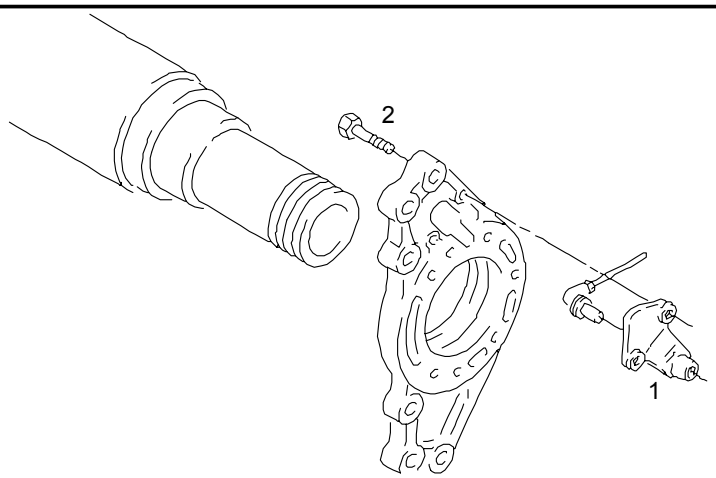

Pos	Part No.	Description	Pat	ME	All	Stk
1	81.35440-0012	bracket for speed sensor	0398	0		2
1	81.35440-0014	bracket for speed sensor		0		2
2	06.02819-0018	hex lock screw M8X45-10.9-MAN183-A2C	0398	0		4
2	06.01013-7115	hex shoulder stud M8X50-8.8-MAN183-B1		0		4

18.12.2003	Type A51 00	Pet 04.92	Chassis No.	Group 350-0	Figure 35 0341	
9:36	Table spring brake cylinder mounting			Reference No. 81.35003-7221 00.00 - 00.00 rear axle HOY-1175-03 disc brake 22,5" + ABS		
Seite: 001						

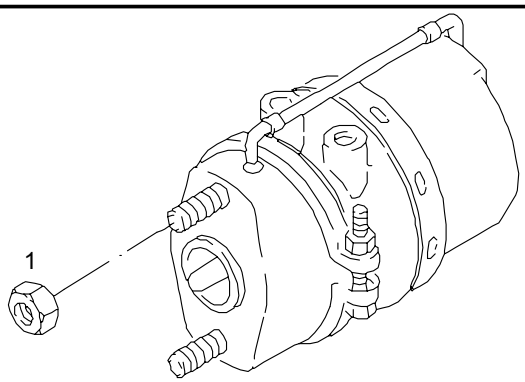

Pos	Part No.	Description	Pat	ME	All	Stk
1	06.11240-0317	hex lock nut AM16X1,5-8-MAN183-B1		0		4

18.12.2003	Type A51 00	Pet 04.92	Chassis No.	Group 350-0	Figure 35 0436
9:37	Table upswept bleeder for axle gearing		Reference No. 81.35003-7221 00.00 - 00.00 rear axle HOY-1175-03 disc brake 22,5" + ABS		
Seite: 001					

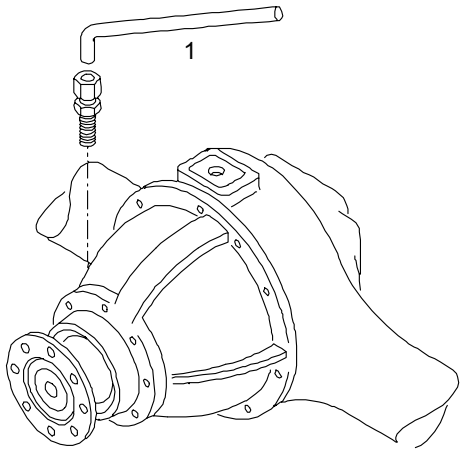

Pos	Part No.	Description	Pat	ME	All	Stk
1	04.35160-9706	polyamide tube 6X1-PA11/12PHLY		1		NB

18.12.2003	Type A51 00	Pet 04.92	Chassis No.	Group 350-0	Figure 35 0062
9:37	Table brake shoe with brake lining TEXTAR T020		Reference No. 81.50200-7182 00.00 - 31.98 air brake with cast shoe brake lining width 220MM		
Seite: 001					

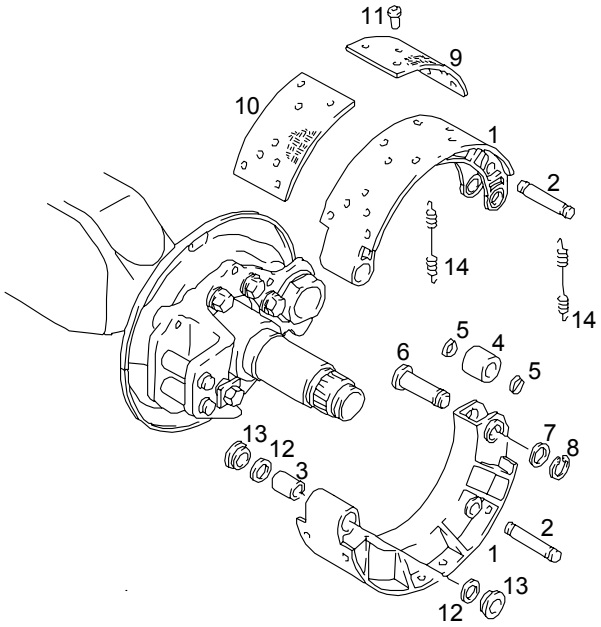

Pos	Part No.	Description	Pat	ME	All	Stk
1	81.50201-6188	brake shoe without lining 220MM		0		4
2	81.50211-0018	>pin		0		4
3	81.93021-0311	>bush >30X34X48-ST/KS940S		0		4
4	81.50213-6013	>roller >assembly		0		4
5	06.56936-1051	>toric seal >20X2,5N-FPM1-70-GN		0		8
6	81.50211-0030	>pin		0		4
7	06.15114-2615	>washer >17X24X1,5-ST2K50	2793	0		4
7	06.15113-2615	>support washer >S17X24X1,5-FST		0		4

18.12.2003	Type A51 00	Pet 04.92	Chassis No.	Group 350-0	Figure 35 0062
9:37	Table brake shoe with brake lining TEXTAR T020		Reference No. 81.50200-7182 00.00 - 31.98 air brake with cast shoe brake lining width 220MM		
Seite: 002					

Pos	Part No.	Description	Pat	ME	All	Stk
8	06.29010-0114	>circlip >17X1,00-ZNPHR5F		0		4
9	81.50221-0546	drum brake lining zero size for repairs 17,67 220MM upper, asbestos-free		0		4
9	81.50221-0545	drum brake lining normal 18,7 220MM upper, asbestos-free		0		4
9	81.50221-0547	drum brake lining repair stage 1 19,5 220MM upper, asbestos-free		0		4
9	81.50221-0548	drum brake lining repair stage 2 20,2 220MM upper, asbestos-free		0		4
10	81.50221-0551	drum brake lining zero size for repairs 17,61 220MM lower, asbestos-free		0		4
10	81.50221-0550	drum brake lining normal 18,6 220MM lower, asbestos-free		0		4
10	81.50221-0552	drum brake lining repair stage 1 19,4 220MM lower, asbestos-free		0		4
10	81.50221-0553	drum brake lining repair stage 2 20,1 220MM lower, asbestos-free		0		4
11	81.92201-0109	rivet 8X20-ST-A4C		0		72
11	81.92201-0108	rivet 8X18-ST-A4C		0		NB

18.12.2003	Type A51 00	Pet 04.92	Chassis No.	Group 350-0	Figure 35 0062
9:37	Table brake shoe with brake lining TEXTAR T020		Reference No. 81.50200-7182 00.00 - 31.98 air brake with cast shoe brake lining width 220MM		
Seite: 003					

Pos	Part No.	Description	Pat	ME	All	Stk
12		>>see plate: >>brake anchor plate				*
13		>>deleted				*
14	81.97610-0123	tension spring	0398	0		4
14	81.97610-0115	tension spring		0		4

11 ÖN SÜSPANSİYON
FRONT AIR SUSPENSION
x

11-010	Ön süspansiyon Front Suspension x	TB162W TB163W	TB162Z TB163Z	TB162X TB163X	TB162Y TB163Y

TEMSA	Ön süspansiyon Front suspension	Drw.no: Vehicle Model: **TB162W, TB162Z, TB162X, TB162Y** **TB163W, TB163Z, TB163X, TB163Y**	**11-010** RevDate: Page: 1

Pos	Part Number	Turkish	English	German	Qty	R/P	From	Up To	Original Number Supplier

18.12.2003	Type A51 00	Pet 04.92	Chassis No.	Group 430-0	Figure 43 1135
19:52	Table shock absorber		Reference No. 88.#0260-0005 06.00 - 20.00 locating system front axle V9-82SL + stabilizer (single tyres)		
Seite: 001					

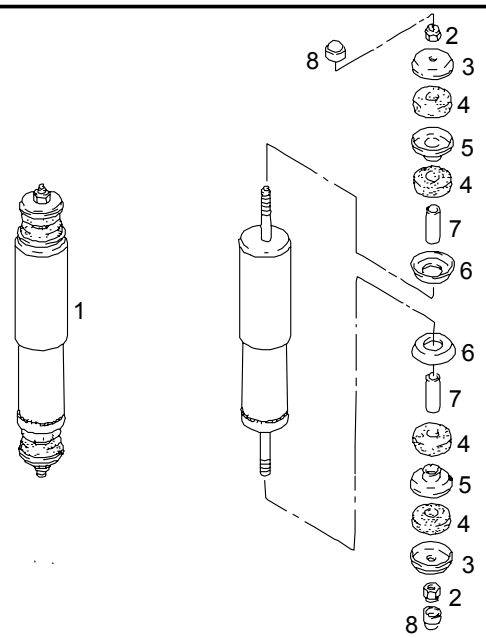

Pos	Part No.	Description	Pat	ME	All	Stk
1	81.43701-6940	shock absorber >fig. >2-8 >deleted		0		2 *

18.12.2003	Type A51 00	Pet 04.92	Chassis No.	Group 432-0	Figure 43 1314
19:53	Table stabilizer front axle		Reference No. 88.#0260-0005 00.00 - 00.00 locating system front axle V9-82SL + stabilizer (single tyres)		
Seite: 001					

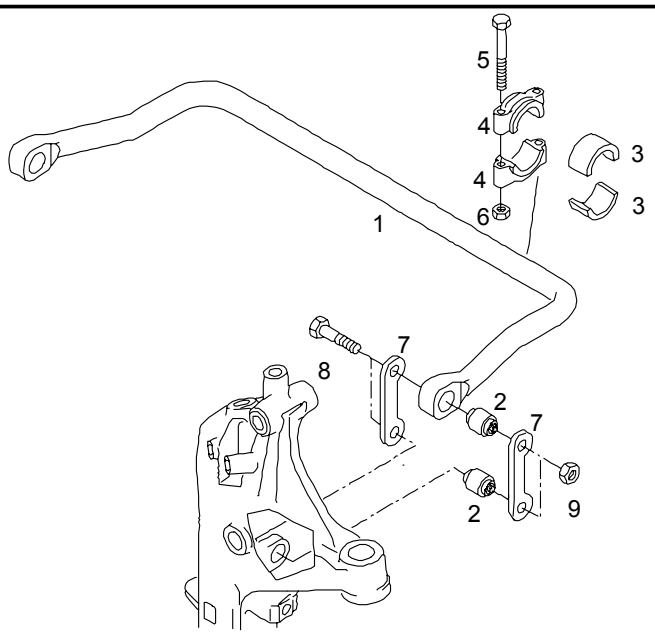

Pos	Part No.	Description	Pat	ME	All	Stk
1	81.43715-0100	stabilizer		0		1
2	81.43722-0059	slotted bush outside diameter 50 MM		0		4
3	81.43704-0057	bushing half		0		4
4	81.43722-0058	bearing shell		0		4
5	06.01494-4424	hex shoulder stud M14X1,5X150-10.9-MAN183-PHR		0		4
6	06.11241-0314	hex lock nut AM14X1,5-10-MAN183-B1		0		4
7	81.43718-0039	pendulum		0		4
8	81.90010-0034	fitted bolt, hex M16X1,5X16H9X90X22-8.8-A3C		0		4
9	06.11241-0317	hex lock nut AM16X1,5-10-MAN183-B1		0		4

18.12.2003	Type A51 00	Pet 04.92	Chassis No.	Group 430-0	Figure 43 0663
19:51	Table air bellows		Reference No. 88.#0260-0005 06.00 - 00.00 locating system front axle V9-82SL + stabilizer (single tyres)		
Seite: 001					

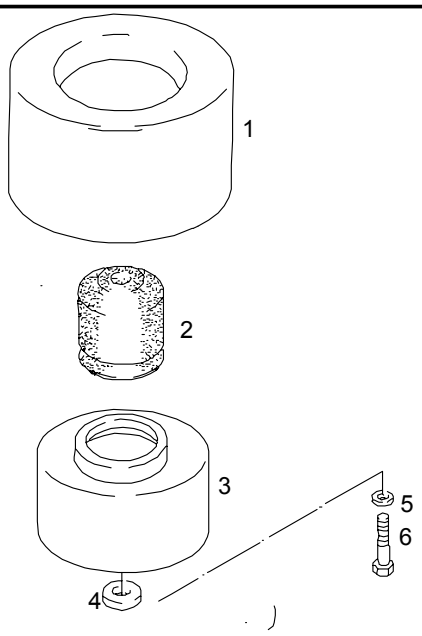

Pos	Part No.	Description	Pat	ME	All	Stk
1	81.43601-0126	air bellows 916 N1		0		2
1	TE771107	air bellows TEMSA				
2	81.96020-0186	rubber pad		0		2
3	81.43603-0062	air spring base 210 MM		0		2
		>fig. >4 + 5 >deleted				*
6	06.01499-0016	hex shoulder stud M18X2X135-8.8-MAN183-PHR		0		2

12 ARKA SÜSPANSİYON
REAR AIR SUSPENSION
x

12-010	Arka süspansiyon Rear Suspension x	TB162W TB163W	TB162Z TB163Z	TB162X TB163X	TB162Y TB163Y

TEMSA	Arka süspansiyon Rear suspension	Drw.no: Vehicle Model: **TB162W, TB162Z, TB162X, TB162Y** **TB163W, TB163Z, TB163X, TB163Y**	**12-010** RevDate: Page: 1

Pos	Part Number	Turkish	English	German	Qty	R/P	From	Up To	Original Number Supplier

TEMSA	a-frame with mounting a-frame with mounting Dreiecklenker mit Befestigung	Drw.no: Vehicle Model: TB162W, TB162Z, TB162X, TB162Y TB163W, TB163Z, TB163X, TB163Y	12-010 RevDate: Page: 1

Pos	Part Number	Turkish	English	German	Qty	R/P	From	Up To	Original Number Supplier
1	81.43270-6093		a-frame	Dreiecklenker	1		1	727	
1	81.43220-6183Y		a-frame	Dreiecklenker	2		728		

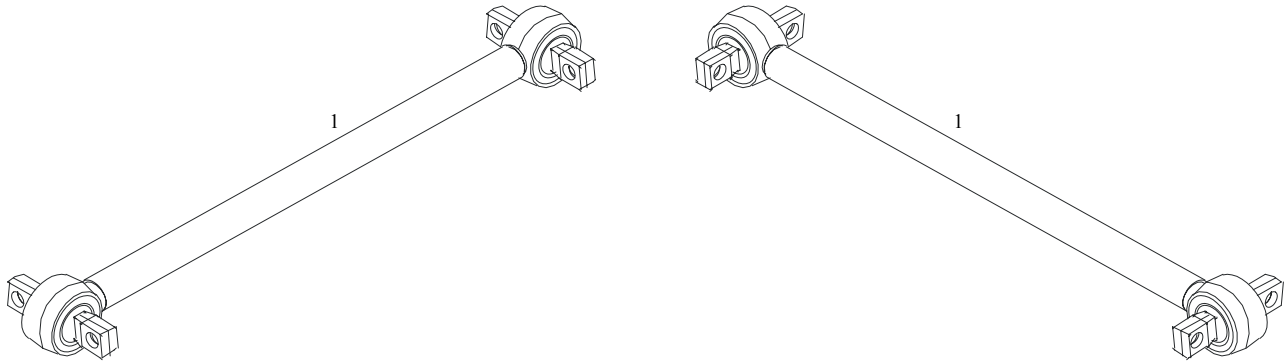

18.12.2003	A51 00	04.92		437-0	43 0984
20:14	axle control arm		88.#0280-0003 00.00 - 00.00 air suspension HY-1175-02		
Seite: 001					

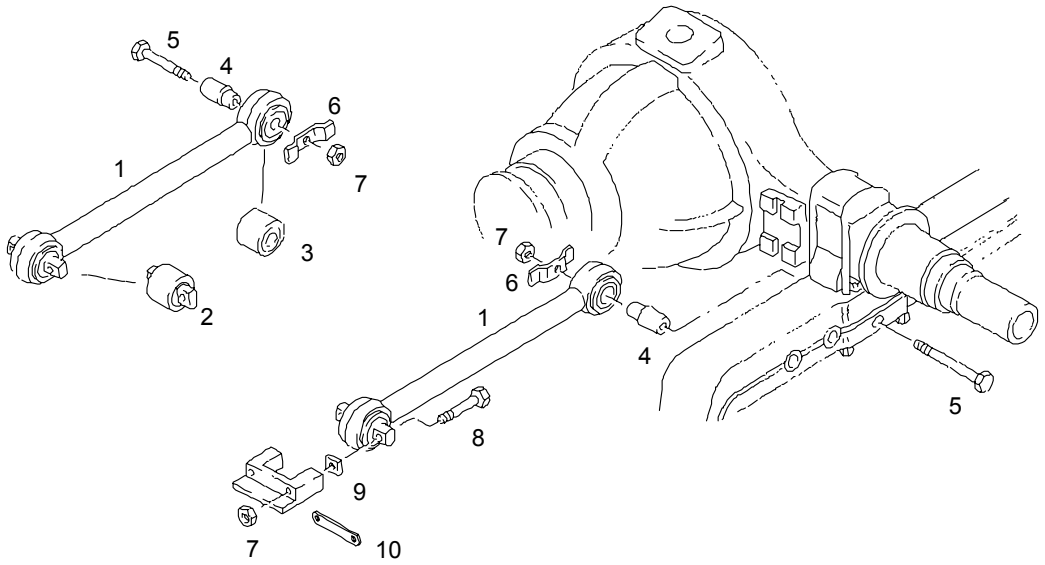

				ME	All	Stk
1	81.43220-6220	axle control arm		0		2
1	TE771104	axle control arm TEMSA				
2	81.43220-6107	repair kit		S		2
	06.29020-0206	>circlip >85X3,00-ZNPHR5F		0		1
	81.95310-0009	>spacer ring		0		1
	81.95302-0059	>ball joint		0		1
3	81.43220-6204	repair kit axle control arm		0		2
4	81.35401-0145	double cone		0		2
5	06.01493-4733	hex shoulder stud M18X2X240-8.8-A-ZNPHR3F		0		2
6	81.35401-0169	stop		0		2
7	06.11241-0321	hex lock nut AM18X2-10-MAN183-B1		0		6

18.12.2003	A51 00	04.92		437-0	43 0984
20:14	axle control arm		88.#0280-0003 00.00 - 00.00 air suspension HY-1175-02		
Seite: 002					

				ME	All	Stk
8	06.01493-4725	hex shoulder stud M18X2X160-8.8-A-ZNPHR3F		0		4
9	81.90750-0493	square washer 19X40X2-QSTE380		0		NB
9	81.90750-0494	square washer 19X40X3-QSTE380		0		NB
9	81.90750-0495	square washer 19X40X5-QSTE380		0		NB
10	81.97488-0195	fish plate 40X10X170-20-130-18,2-QSTE340-		0		2

18.12.2003	A51 00	04.92		437-0	43 1563
20:14	air spring base with mounting		88.#0280-0003 13.02 - 00.00 air suspension HY-1175-02		
Seite: 001					

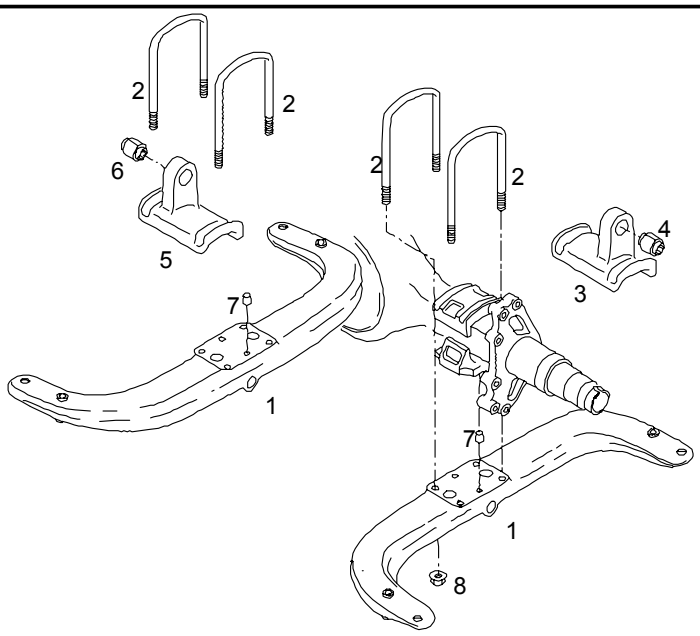

				ME	All	Stk
1	81.43640-0162	air spring base		0		2
2	81.41312-0239	u-bolt M24X2-166X400X70-42CRM04V		0		4
3	81.41335-6007	spring clamp plate assembly left		0		1
4	81.43722-0059	>slotted bush >outside diameter >50 MM		0		1
5	81.41335-6008	spring clamp plate assembly right		0		1
6	81.43722-0059	>slotted bush >outside diameter >50 MM		0		1
7	06.21362-1420	dowel pin B28R6X38-ST50-2K		0		4

18.12.2003	A51 00	04.92		437-0	43 1563	
20:14	air spring base with mounting		88.#0280-0003 13.02 - 00.00 air suspension HY-1175-02			
Seite: 002						

				ME	All	Stk
8	06.11289-0005	hex collar lock nut M24X2-32-10-SW36-A3C		0		8

18.12.2003	A51 00	04.92		437-0	43 1173	
20:13	air bellows guard plates		88.#0280-0003 00.00 - 00.00 air suspension HY-1175-02			
Seite: 001						

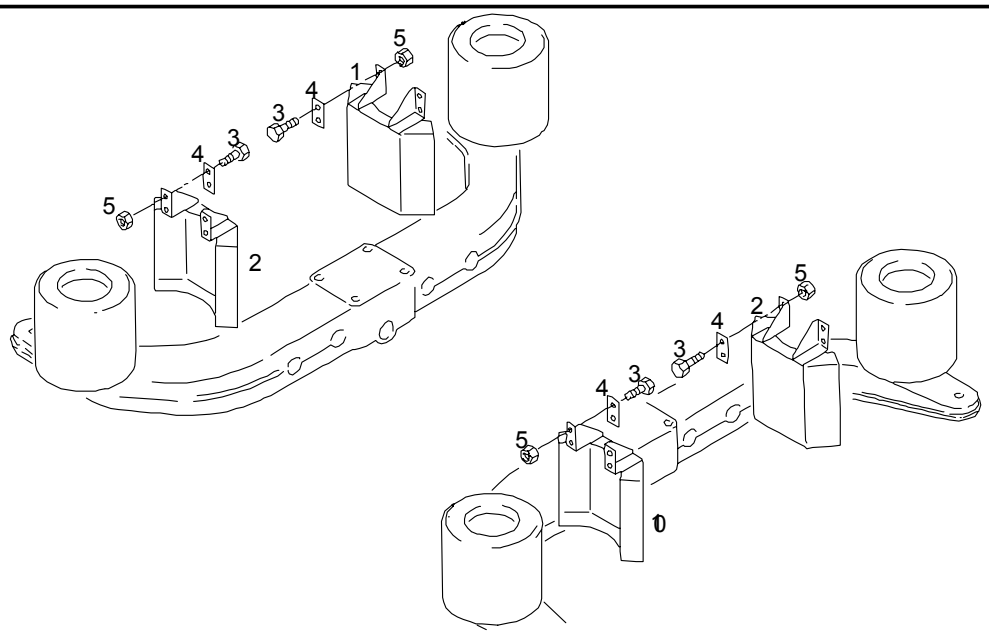

				ME	All	Stk
1	81.43645-5006	guard plate assembly right black >left >front >right >rear		0		2 *
2	81.43645-5005	guard plate assembly left black >left >rear >right >front		0		2 *
3	06.01303-3111	hex bolt M8X16SK-8.8-MAN183-A2C		0		16

18.12.2003	A51 00	04.92		437-0	43 1173
20:13	air bellows guard plates		88.#0280-0003 00.00 - 00.00 air suspension HY-1175-02		
Seite: 002					

				ME	All	Stk
4		>deleted				*
5	06.11240-0404	hex lock nut BM8-8-MAN183-B1		0		16

18.12.2003	A51 00	04.92		437-0	43 1135
20:17	shock absorber rear axle		81.#0280-0684 00.00 - 00.00 air suspension HY-1175-02		
Seite: 001					

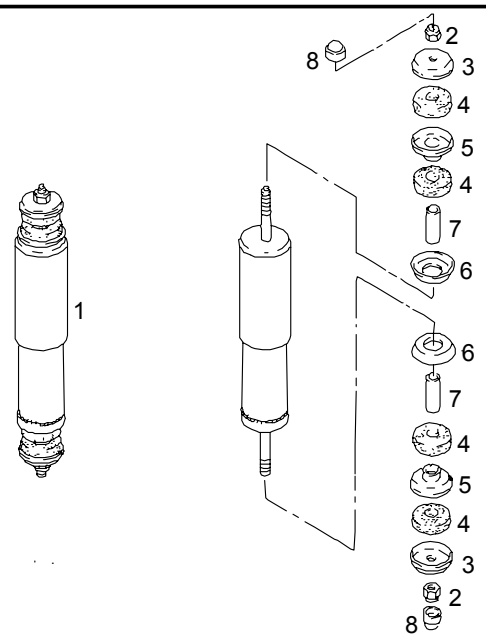

				ME	All	Stk
1	81.43701-6830	shock absorber rear axle		0		4
2	06.11241-0314	>hex lock nut >AM14X1,5-10-MAN183-B1		0		8
3	81.43716-0034	>shock absorber cup >16,2X72X5 >galvanized		0		8
4	81.43706-0019	>rubber bush		0		16
5	81.43716-0031	>shock absorber cup		0		8
6	81.43716-0030	>shock absorber cup		0		8
7	81.93021-0343	>bush >shock absorber		0		8
8	81.96410-0322	>protective cap		0		8

18.12.2003	A51 00	04.92		437-0	43 1370
20:18	stabilizer rear axle		81.#3620-0159 00.00 - 00.00 stabilizer for rear axle (HOY-1175-02)		
Seite: 001					

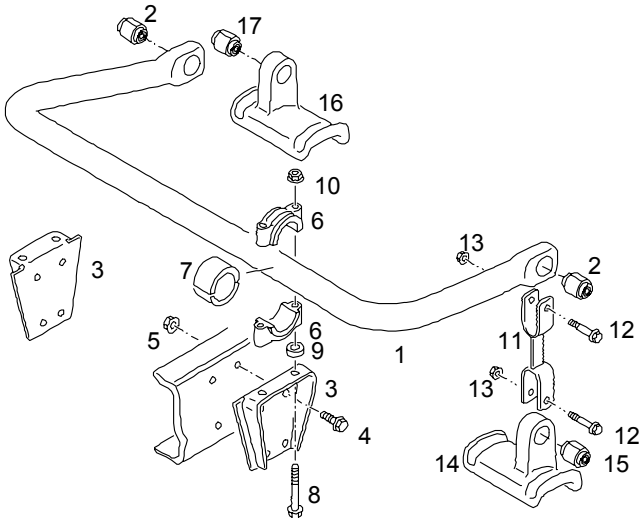

				ME	All	Stk
1	81.43715-0099	stabilizer		0		1
2	81.43722-0059	slotted bush outside diameter 50 MM		0		2
3	81.43705-0246	bracket	3699	0		2
3	81.43705-0250	bracket		0		2
4	06.02813-4911	hex lock screw M14X1,5X30-10.9-MAN183-B1		0		8
5	06.11251-2005	hex lock nut M14X1,5-10-MAN183-B1		0		8
6	81.43722-6057	bearing cap assembly	3699	0		2
6	81.43718-0043	bearing cap stabilizer		0		4
7	81.43704-0074	bushing half	3699	0		2

18.12.2003	A51 00	04.92		437-0	43 1370	
20:18	stabilizer rear axle		81.#3620-0159 00.00 - 00.00 stabilizer for rear axle (HOY-1175-02)			
Seite: 002						

				ME	All	Stk
7	81.43704-0078	slotted bush 45 MM stabilizer		0		2
8	06.02813-4928	hex lock screw M14X1,5X120-10.9-MAN183-B1		0		4
9	81.93021-0377	bush 15X30X10-ST50-2-RAL9011		0		4
10	06.11251-2005	hex lock nut M14X1,5-10-MAN183-B1		0		4
11	81.43718-5110	support assembly 220 MM		0		2
12	85.90010-0002	fitted bolt, hex M16X1,5X16H9X85-8.8-A3C		0		4
13	06.11240-0317	hex lock nut AM16X1,5-8-MAN183-B1		0		4
14	81.41335-6007	spring clamp plate assembly left		0		1
15	81.43722-0059	>slotted bush >outside diameter >50 MM		0		1
16	81.41335-6008	spring clamp plate assembly right		0		1
17	81.43722-0059	>slotted bush >outside diameter >50 MM		0		1

18.12.2003	A51 00	04.92		437-0	43 0663
20:13	air bellows		88.#0280-0003 00.00 - 00.00 air suspension HY-1175-02		
Seite: 001					

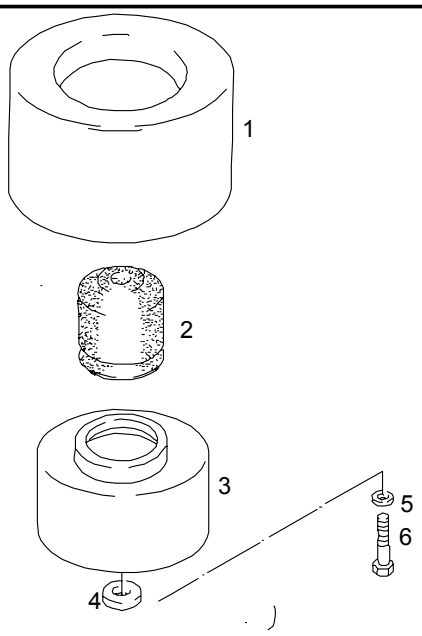

				ME	All	Stk
1	81.43601-0126	air bellows 916N1		0		4
1	TE771107	air bellows TEMSA				
2	81.96020-0186	rubber pad		0		4
3	81.43603-0062	air spring base 210 MM		0		4
		>fig. >4 + 5 >deleted				*
6	06.02838-2901	hex lock screw M18X2X80B-MK18-8.8-A3C		0		4

13 KARDANŞAFT
DRIVE SHAFT
x

13-010	Kardanşaft Propellershaft x	TB162W	TB162Z	TB162X	TB162Y
13-011	Kardanşaft Propellershaft x	TB163W	TB163Z	TB163X	TB163Y

TEMSA	Kardan şaft Propeller shaft Gelenkwellen	Group No : 13-010 Draw. Num. : x Rev. Date :
	Vehicle Model: TB162W, TB162Z, TB162X, TB162Y,	Page : 1

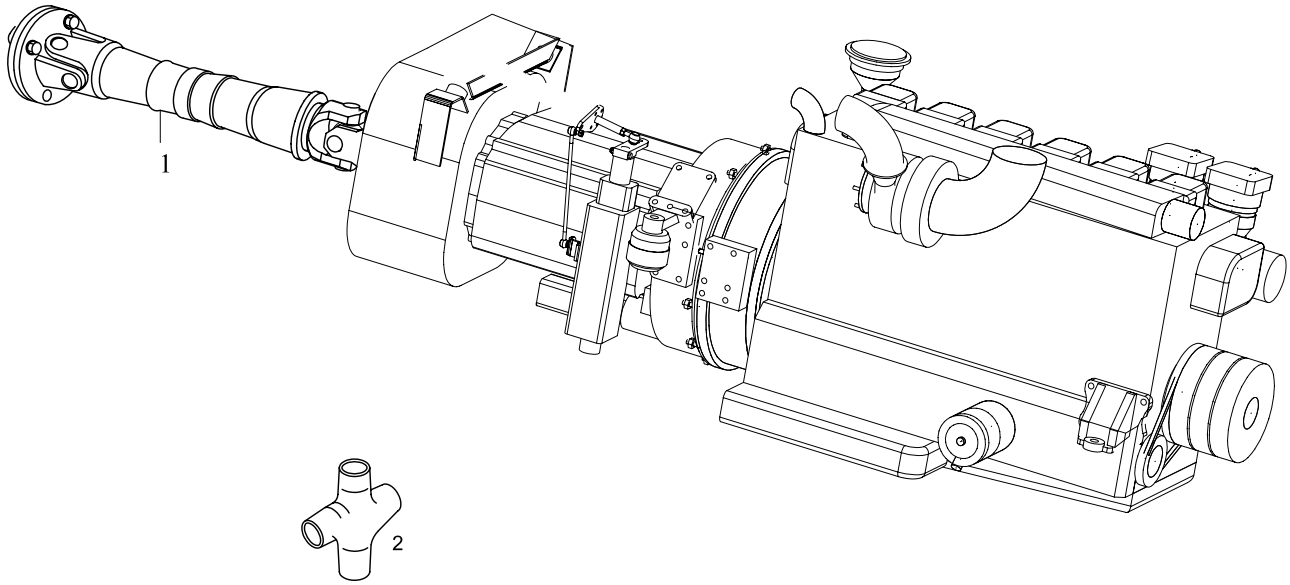

TEMSA	Kardanşaft Propeller shaft	Drw.no Vehicle Model: 360ps **TB162W, TB162Z, TB162X, TB162Y**	**13-010** RevDate: Page: 1

Pos	Part Number	Turkish	English	German	Qty	R/P	From	Up To	Original Number Supplier
1	TE771000-04Y	KARDANŞAFT manuel şanzuman	PROPELLER SHAFT MANUAL T/M		1		1	201204	
1	TE771000-05Y	KARDANŞAFT manuel şanzuman	PROPELLER SHAFT MANUAL T/M		1		201204		
1	TE771000-045Y	KARDANŞAFT otomatik şanzuman	PROPELLER SHAFT AUTOMATIC T/M		1		1	111104	
1	TE771000-055Y	KARDANŞAFT otomatik şanzuman	PROPELLER SHAFT AUTOMATIC T/M		1		111104		
2	UJ.68740.01.02	İSTAVROZ	UNIVERSAL JOINT KIT		2		1		AKKARDAN

TEMSA	Kardan şaft Propeller shaft Gelenkwellen	Group No : 13-011 Draw. Num. : x Rev. Date :
	Vehicle Model: TB163W, TB163Z, TB163X, TB163Y	Page : 1

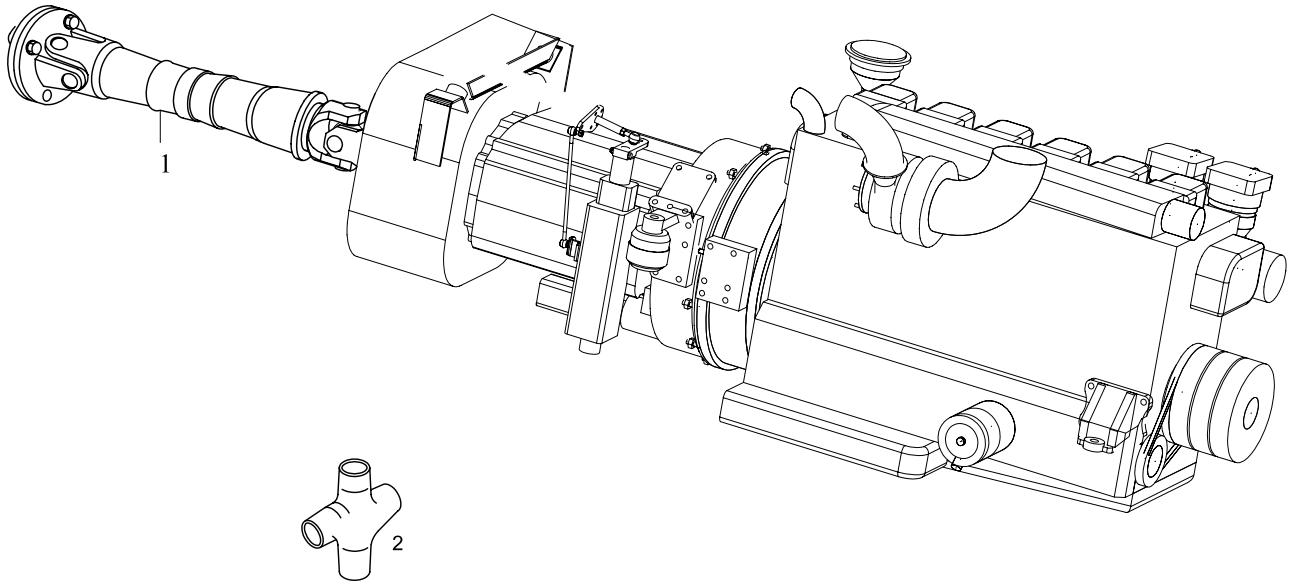

TEMSA	Kardanşaft Propeller shaft Gelenkwellen	Drw.no Vehicle Model: 410ps TB163W, TB163Z, TB163X, TB163Y	13-011 RevDate: Page: 1

Pos	Part Number	Turkish	English	German	Qty	R/P	From	Up To	Original Number Supplier
1	TE771000-050Y	KARDANŞAFT manuel şanzuman	PROPELLER SHAFT MANUAL T/M		1		010504		
2	UJ.68740.01.02	İSTAVROZ	UNIVERSAL JOINT KIT		2		1		AKKARDAN

14 PEDAL
PEDAL
x

14-010	Fren, Gaz ve Debriyaj pedalı Brake, Accelerator and Clutch pedal x	TB162W TB163W	TB162Z TB163Z	TB162X TB163X	TB162Y TB163Y

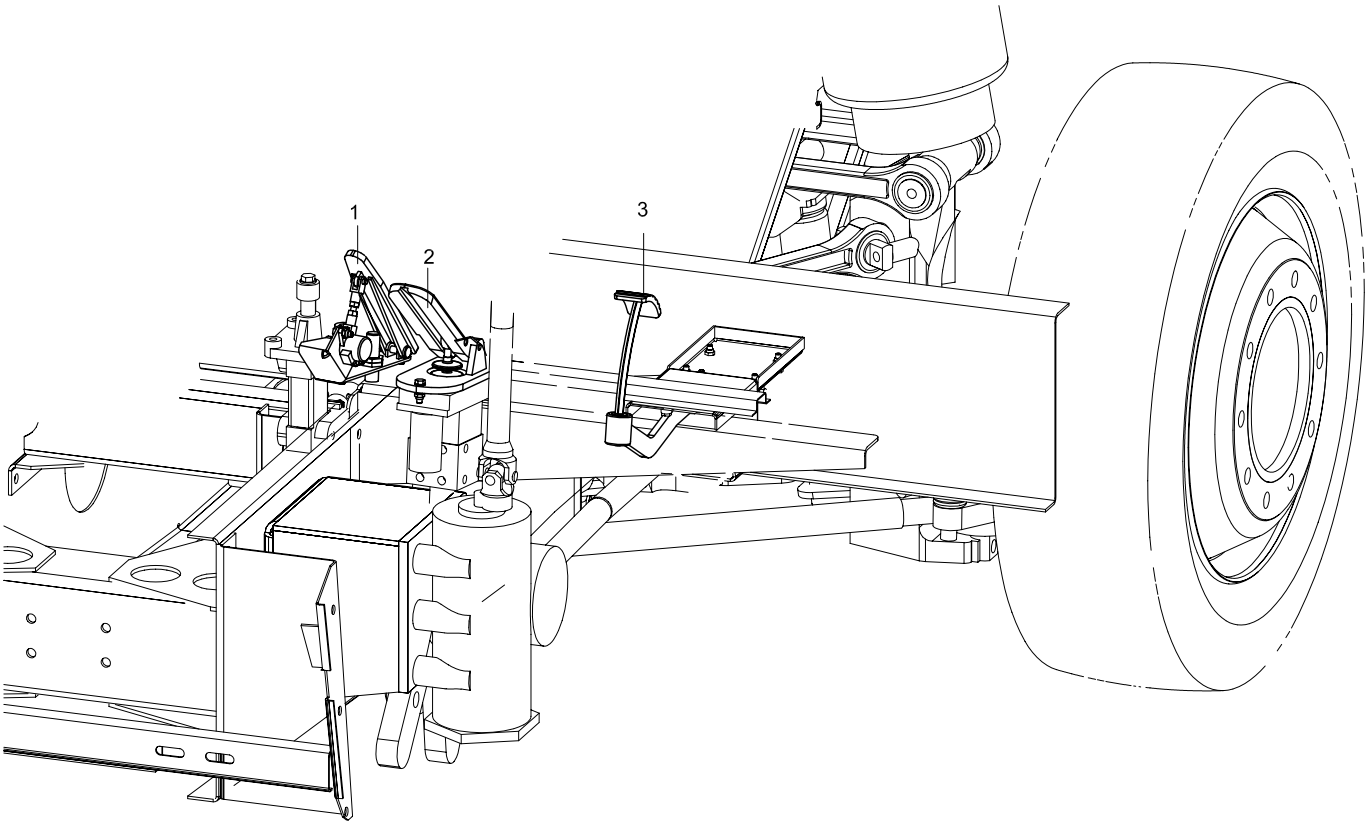
1
2
3

TEMSA	Fren, gaz ve debriyaj pedalı Brake, accelerator and clutch pedal	Drw.no: Vehicle Model: **TB162W, TB162Z, TB162X, TB162Y** **TB163W, TB163Z, TB163X, TB163Y**	**14-010** RevDate: Page: 1

Pos	Part Number	Turkish	English	German	Qty	R/P	From	Up To	Original Number Supplier
1	81.48201-0028	GAZ PEDALI	ACCELERATOR PEDAL		1		1		MAN
2	TC298203	FREN PEDALI	BRAKE PEDAL		1		1		KNORR MB4761 REF.grup 21-020
3	81.48225-5097	DEBRİYAJ PEDALI	CLUTCH PEDAL		1		1		MAN REF.grup 06-010

15 MOTOR FRENİ
EXHAUST BRAKE AIR CYLINDER
x

15-010	Motor freni hava silindiri Exhaust brake air cylinder x	TB162W TB163W	TB162Z TB163Z	TB162X TB163X	TB162Y TB163Y

TEMSA	Motor freni hava silindiri Exhaust brake air cylinder	Drw.no: Vehicle Model: TB162W, TB162Z, TB162X, TB162Y TB163W, TB163Z, TB163X, TB163Y	15-010 RevDate: Page: 1

Pos	Part Number	Turkish	English	German	Qty	R/P	From	Up To	Original Number Supplier

28.12.2003	A51 00	04.92		159-0	15 0779
20:27	exhaust brake air cylinder		81.#0890-0119 00.00 - 00.00 exhaust brake (without foot control) for automatic gearbox with EVB		
Seite: 001					

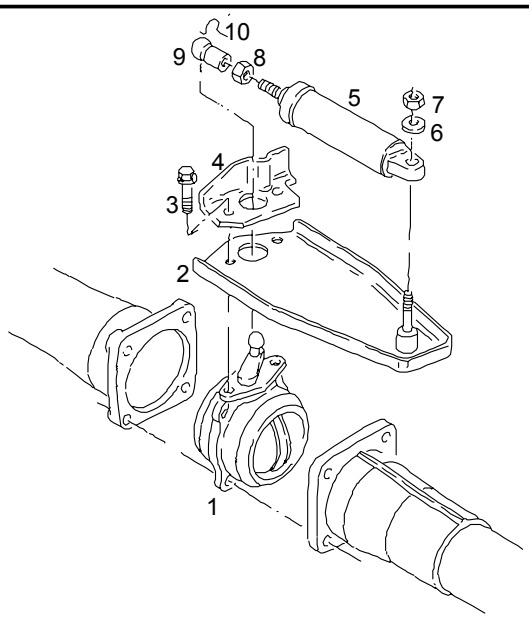

				ME	All	Stk
	81.15600-6103	exhaust brake assembly		0		1
1	81.15600-6106	>exhaust throttle		0		1
2	81.15640-0013	>bracket		0		1
3	06.02819-0029	>hex lock screw >M8X20TC-10.9-MAN183-B1		0		2
4	81.15640-0016	>stop angle		0		1
5	81.15701-6112	>air cylinder		0		1
6	06.15013-0411	>washer >A8,4X16X1,6-200HV-MAN183-B1		0		1
7	06.11241-0304	>hex lock nut >AM8-10-MAN183-B1		0		1
8	06.11185-0115	>hexagon nut >M10-8-A3C		0		1

28.12.2003	A51 00	04.92		159-0	15 0779	
20:27	exhaust brake air cylinder		81.#0890-0119 00.00 - 00.00 exhaust brake (without foot control) for automatic gearbox with EVB			
Seite: 002						

				ME	All	Stk
9	81.95301-0066	>ball socket		0		1
10	06.36127-4404	>>securing clip >>S16-A3C		0		1

16 DİREKSİYON
STEERING
x

16-010	Direksiyon Steering x	TB162W TB163W	TB162Z TB163Z	TB162X TB163X	TB162Y TB163Y
16-020	Çekme ve pıtman kolu, dişli kutusu Gear box draglinkage arm pitman Pedalbausatz, Schaltungsarm, Antriebswelle	TB162W TB163W	TB162Z TB163Z	TB162X TB163X	TB162Y TB163Y
16-030	Direksiyon yağ boruları Power steering oil piping x	TB162W TB163W	TB162Z TB163Z	TB162X TB163X	TB162Y TB163Y

TEMSA	Direksiyon Steering Lenkung	Group No : 16-010 Draw. Num. : x Rev. Date :
	Vehicle Model: TB162W, TB162Z, TB162X, TB162Y, TB163W, TB163Z, TB163X, TB163Y	Page : 1

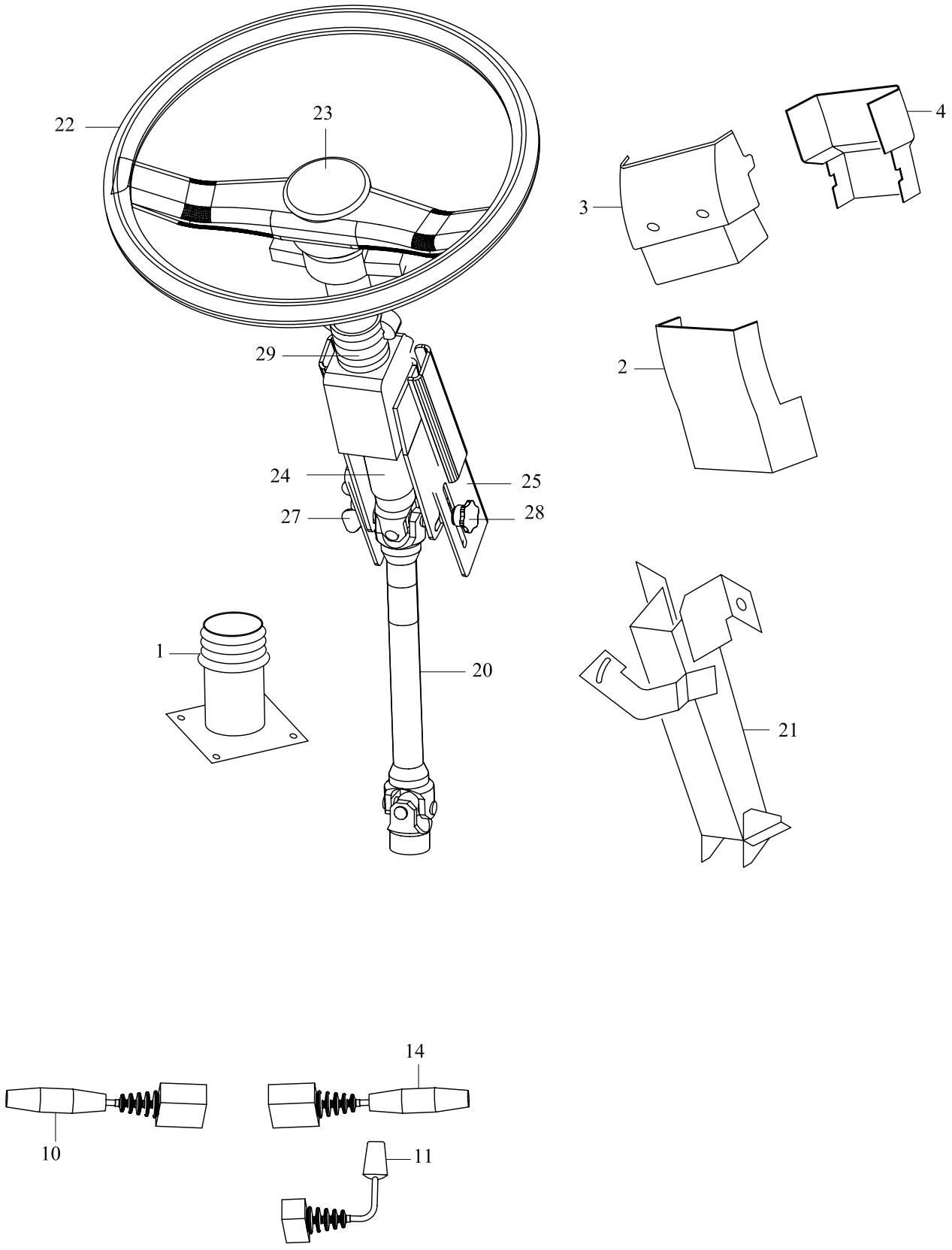

TEMSA	Direksiyon Steering Lenkung	Drw.no: TC298827-090-091-095 Vehicle Model: **TB162W, TB162Z, TB162X, TB162Y** **TB163W, TB163Z, TB163X, TB163Y**	**16-010** RevDate: Page: 1

Pos	Part Number	Turkish	English	German	Qty	R/P	From	Up To	Original Number Supplier
1	81.96420-0436	KÖPÜK	RUBBER		1		1		MAN
2	81.46113-0085	KAPAK	COVER		1		1		MAN
3	81.46113-0094	KAPAK	COVER		1		1		MAN
4	81.46113-0095	KAPAK	COVER		1		1		MAN
10	81.25509-0119	KUMANDA SİVİCİ	COMBI SWITCH		1		1	?	old - MAN
10	81.25509-0124	KUMANDA SİVİCİ	COMBI SWITCH		1		?		new - MAN
11	81.25509-0069	KUMANDA SİVİCİ	INTARDER CONTROL SWITCH		1		1		MAN
14	81.25509-0050	KUMANDA SİVİCİ	CRUISE CONTROL SWITCH		1		1		option - MAN
20	81.46122-6123	DİREKSİYON MİLİ ALT	STEERING SHAFT BOTTOM		1		1		MAN
21	TC298827-190CY	BRAKET	SUPPORT		1		1	210404	
21	TC298827-195Y	BRAKET	SUPPORT		1		210404		
22	81.46430-6021	DİREKSİYON SİMİDİ	WHEEL STEERING		1		1		MAN
23	81.46431-0013	KORNA PEDİ	PED HORN		1		1		MAN
24	81.46113-0070	DİREKSİYON ŞAFTI KOMP.	COLUMN ASSY STEERING		1		1		MAN
25	81.46118-0049	DİREKSİYON ÜST GÖVDESİ	BODY UPPER STEERING		1		1		MAN
27	81.97005-0048	TOPUZ	KNOP		1		1		MAN
28	81.97005-0047	TOPUZ	KNOP		1		1		MAN
29	81.97602-0729	YAY	SPRING		1		1		MAN

18.12.2003	Type A51 00	Pet 04.92	Chassis No.	Group 461-0	Figure 46 0645
19:25	Table steering column adjustable		Reference No. 88.#0300-0009 00.00 - 00.00 steering system with/for VA. VOS-08-B-01 l.h. drive vehicle		
Seite: 001					

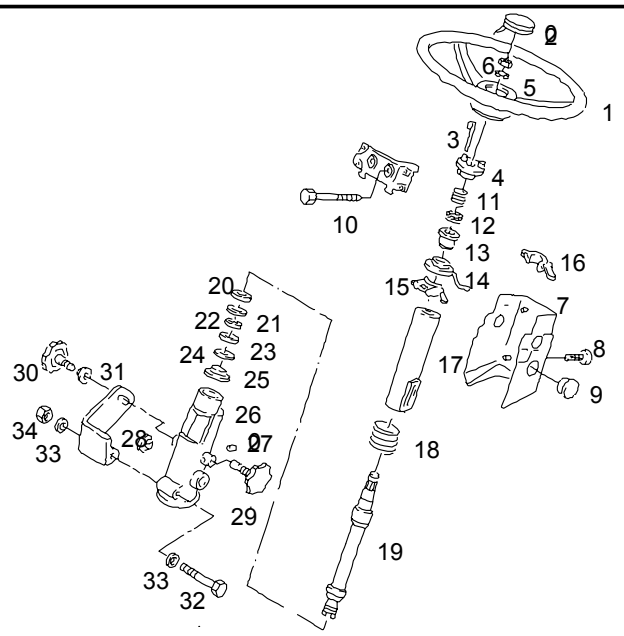

Pos	Part No.	Description	Pat	ME	All	Stk
1	81.46430-0069	steering wheel 500 MM		0		1
2	81.46431-0013	horn button assembly man logo		0		1
3	81.25404-6846	loom horn		0		1
4	81.46430-6008	flange assembly		0		1
5	06.16049-0020	spring washer B22-FST-MAN183-B1		0		1
6	06.11022-0412	hexagon nut BM22X1,5-05		0		1
7	81.46113-0085	panelling lower		0		1

18.12.2003	Type A51 00	Pet 04.92	Chassis No.	Group 461-0	Figure 46 0645
19:25	Table steering column adjustable		Reference No. 88.#0300-0009 00.00 - 00.00 steering system with/for VA. VOS-08-B-01 l.h. drive vehicle		
Seite: 002					

Pos	Part No.	Description	Pat	ME	All	Stk
8	06.07095-0204	oval-head tapping screw AEM4X12-A3R		0		4
9	81.96410-0560	cap 56X20		0		1
10	06.03221-0614	screw with external torx BM8X65-8.8-MAN183-PHR with large flange		0		2
11	81.97601-0195	pressure spring 3,2X29,7X35-FST		0		1
12	81.46109-0044	clamping ring		0		1
13	81.46115-0041	steering column bearing		0		1
14	81.46136-0013	slip ring		0		1
15	81.46433-0005	clamp half for steering lock		0		1
16	81.46433-0011	clamp half for steering lock		0		1
17	81.46118-5002	bearing sleeve assembly		0		1
18	81.97602-0729	pressure spring 4X56/72X192-FST		0		1
19	81.46113-0070	steering spindle		0		1
20	06.31429-0120	ball bearing 61806-2Z-Y-C4		0		1
21		deleted				*
22	06.37069-0017	circlip 28,5X33,1X1,50		0		1
23	81.91710-0497	washer 30,4X42P6X5-ST60-2		0		1
24	06.29020-0126	circlip 42X1,75-ZNPHR5F		0		1

18.12.2003	Type A51 00	Pet 04.92	Chassis No.	Group 461-0	Figure 46 0645
19:25	Table steering column adjustable		Reference No. 88.#0300-0009 00.00 - 00.00 steering system with/for VA. VOS-08-B-01 l.h. drive vehicle		
Seite: 003					

Pos	Part No.	Description	Pat	ME	All	Stk
25		deleted				*
26	81.46118-0049	steering spindle housing		0		1
27	06.22140-0815	dowel pin 5M6X32		0		1
28	81.96410-0353	cap 50X12		0		1
29	81.97005-0048	hand wheel		0		1
30	81.97005-0047	hand wheel		0		1
31	81.46111-0066	friction plate		0		1
32	06.01019-0102	hex shoulder stud M10X120-8.8-A3C		0		1
33	06.15013-0412	washer A10,5X20X2-200HV-MAN183-B1		0		2
34	06.11240-0406	hex lock nut BM10-8-MAN183-B1		0		1

28.12.2003	Type A51 00	Pet 04.92	Chassis No.	Group 461-0	Figure 46 0382
17:25	Table steering column casing		Reference No. 81.#02L0-0024 00.00 - 00.00 multi-function switch - stalk switch		
Seite: 001					

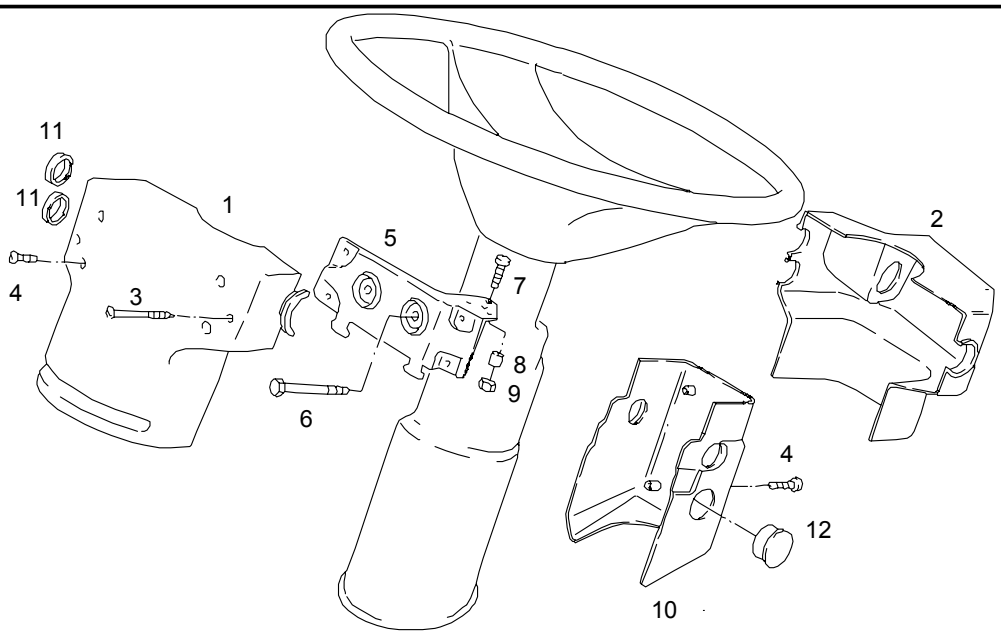

Pos	Part No.	Description	Pat	ME	All	Stk
1	81.46113-0095	steering column casing rear section upper		0		1
2	81.46113-0094	steering column casing front part upper		0		1
3	06.07158-1511	oval-head self-tapping screw ST4,2X50C-H-A3R		0		2
4	06.07095-0204	oval-head tapping screw AEM4X12-A3R		0		8
5	81.46145-0014	bracket		0		1
6		see plate:				*
		steering column adjustable				*
7	06.04201-2513	pan-head screw M5X30-4.8-H-MAN183-B1		0		1

28.12.2003	Type A51 00	Pet 04.92	Chassis No.	Group 461-0	Figure 46 0382
17:25	Table steering column casing		Reference No. 81.#02L0-0024 00.00 - 00.00 multi-function switch - stalk switch		
Seite: 002					

Pos	Part No.	Description	Pat	ME	All	Stk
8	81.95801-0071	bush 6,1X10X16-POM		0		1
9	06.11240-2102	hex lock nut AM5-8-A2C		0		1
10		fig. 10 + 12 see plate:				*
		steering column adjustable				*
11	81.46113-0088	cap black plastic		0		2

18.12.2003	Type A51 00	Pet 04.92	Chassis No.	Group 461-0	Figure 46 0654	
19:29	Table steering spindle bellows			Reference No. 88.#0300-0009 00.00 - 00.00 steering system with/for VA. VOS-08-B-01 l.h. drive vehicle		
Seite: 001						

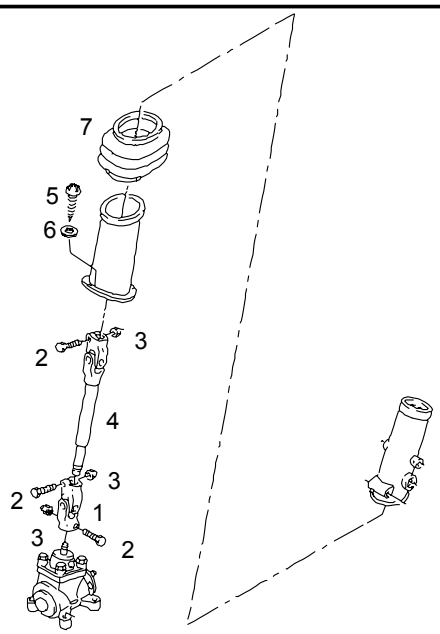

Pos	Part No.	Description	Pat	ME	All	Stk
1		deleted in				*
		fig. 4 contained				*
2	81.90010-0065	fitted bolt, hex M10X1,25X10,4E8X49-10.9-MAN183		0		2
3	06.11240-0408	hex lock nut BM10X1,25-8-MAN183-B1		0		2
4	81.46122-6123	steering spindle assembly		0		1
5	06.07158-1604	oval-head self-tapping screw ST4,8X16C-H-A3R		0		8
6	06.15019-0072	washer A5,3X10X1-200HV-A3R		0		8
7	81.96420-0436	bellows		0		1

18.12.2003	Type A51 00	Pet 04.92	Chassis No.	Group 461-0	Figure 46 0631
19:29	Table steering lock		Reference No. 81.#02A0-0300 00.00 - 00.00 for automatic gearbox , 6 push keys		
Seite: 001					

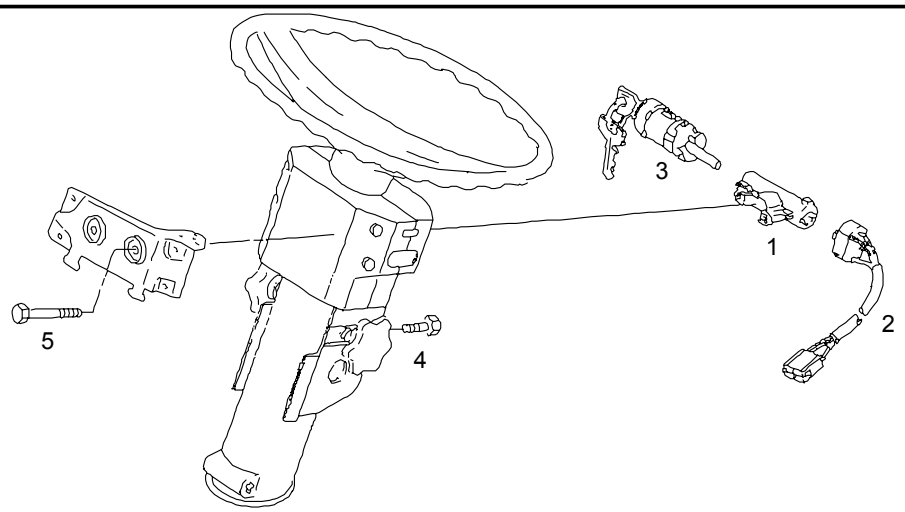

Pos	Part No.	Description	Pat	ME	All	Stk
1	81.46433-6009	steering lock assembly		0		1
2	81.25501-6033	>ignition starter switch >with cable >700 MM >8-pin		0		1
3		see plate: lock with keys				*
4	81.90490-0270	shear bolt M12X1,5X15-9S20K-SW14		0		1
5	81.90490-0443	shear bolt with external torx M8X65-8.8-E8		0		2

28.12.2003	A51 00	04.92		250-0	25 1253
20:40	stalk switch		81.#02L0-0024 05.00 - 00.00 multi-function switch - stalk switch		
Seite: 001					

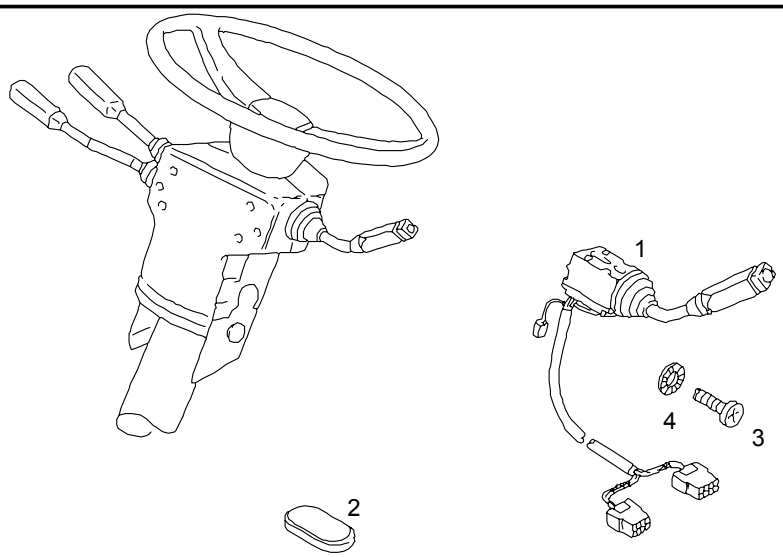

				ME	All	Stk
1	81.25509-0124	stalk switch combined		0		1
2		deleted				*
3	06.04201-4504	pan-head screw M5X8-4.8-H-A2C		0		3
4	06.16160-2103	lock washer 5-A3C		0		3

28.12.2003	A51 00	04.92		461-0	46 0532
17:37	lock set vehicle keys		81.#02A0-0300 00.00 - 00.00 for automatic gearbox , 6 push keys		
Seite: 001					

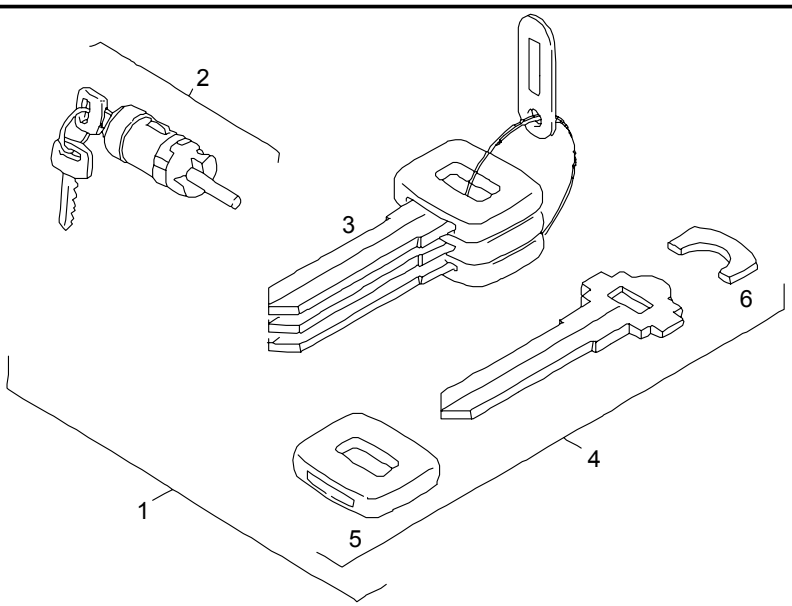

				ME	All	Stk
1	81.97100-6095	lock set		S		1
2	81.97100-6034	>lock set >with two keys		0		1
		>>lock cylinder >>individual >>not available				*
3	81.97118-6002	>vehicle keys >set		S		1
		>>please specify key number				*
4	81.97118-6003	>>vehicle keys >>man logo		0		3
5	81.97118-0027	>>>securing head >>>MAN		0		3
6	81.62682-0001	>>>mounting wedge		0		3

18.12.2003	Type A51 00	Pet 04.92	Chassis No.	Group 461-0	Figure 46 0067
19:25	Table steering fluid reservoir		Reference No. 88.#0300-0009 00.00 - 00.00 steering system with/for VA. VOS-08-B-01 l.h. drive vehicle		
Seite: 001					

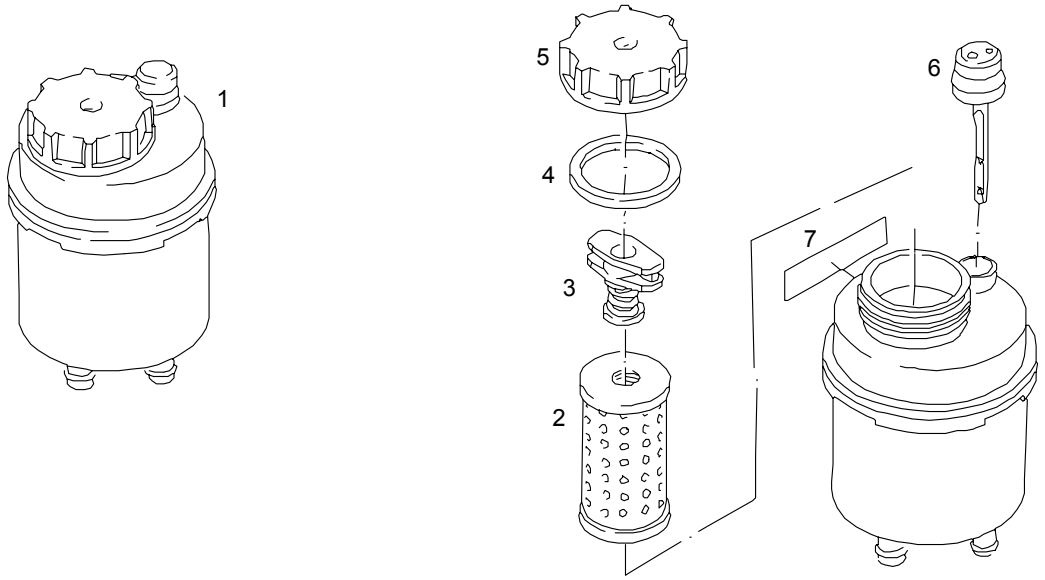

Pos	Part No.	Description	Pat	ME	All	Stk
1	81.47301-6030	fluid reservoir		0		1
2	81.47301-6005	>hydr. fluid filter element >steering system		0		1
3	81.47340-0056	>latch		0		1
4	81.96502-0686	>seal >63X74,8X3-NBR		0		1
5	81.47302-0011	>cover >black		0		1
6	81.47303-0045	>oil dipstick		0		1
7	81.97802-0548	adhesive label german		0		1

28.12.2003	A51 00	04.92		250-0	25 1955	
20:34	retarder switch		88.#2120-0142 05.00 - 00.00 retarder switch on steering column for intarder			
Seite: 001						

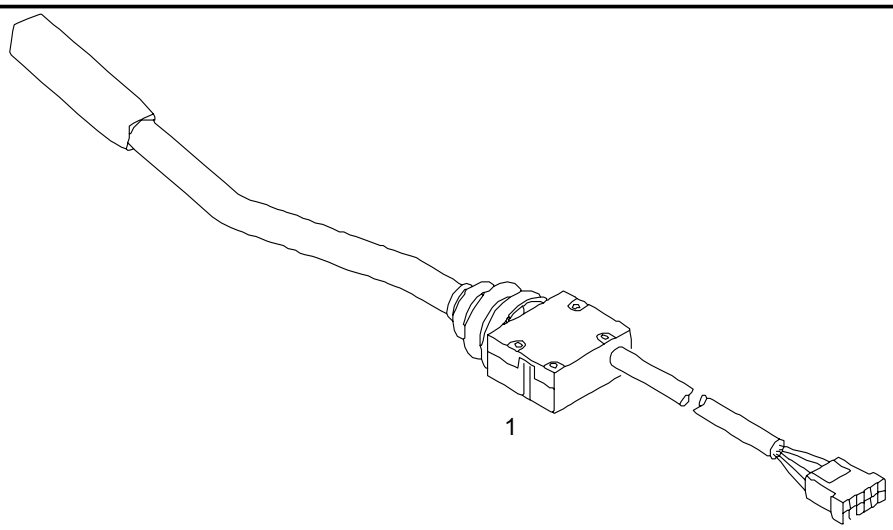

				ME	All	Stk
1	81.25509-0069	retarder switch		0		1

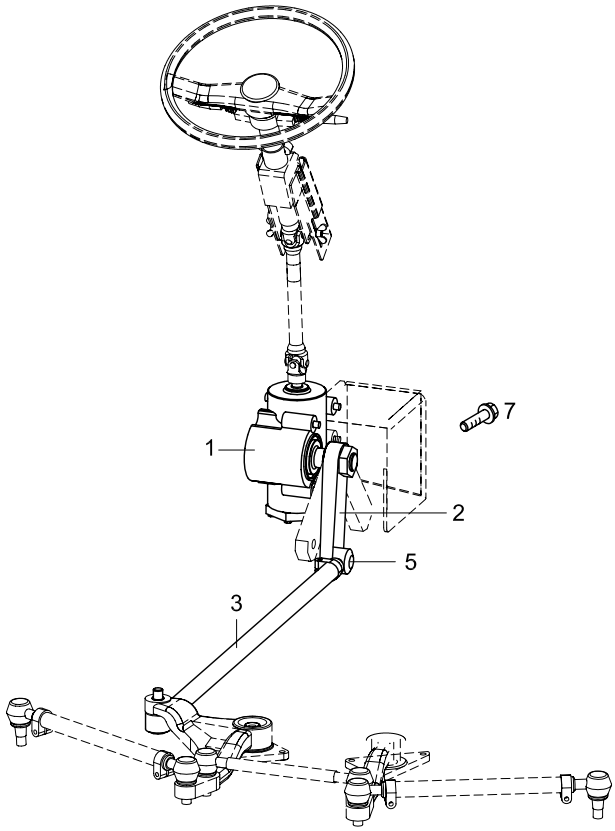
7
1
2
5
3

TEMSA	Çekme ve pıtman kolu, dişli kutusu Gear box draglinkage arm pitman Pedalbausatz, Schaltungsarm, Antriebswelle	Drw.no: TC299000-021 Vehicle Model: TB162W, TB162Z, TB162X, TB162Y TB163W, TB163Z, TB163X, TB163Y	16-020 RevDate: Page: 1

Pos	Part Number	Turkish	English	German	Qty	R/P	From	Up To	Original Number Supplier
1	TC299000-100Y	DİŞLİ KUTUSU	GEAR BOX ASSY		1		1		HEMA
2	TC299000-101AY	PITMAN KOLU	ARM PITMAN		1		1		HEMA
3	TC299000-202Y	ÇEKME KOLU	DRAGLINKAGE		1		1		ZF
5	MF472102Y	KOPİLYA	PIN SPLIT		2		1		
7	TC299000-104Y	CIVATA	BOLT		1		1		

TEMSA	Direksiyon yağ boruları Power Steering Oil Piping Servolenkungsölleitung	Group No : 16-030 Draw. Num. : x Rev. Date : Page : 1
	Vehicle Model: TB162W, TB162Z, TB162X, TB162Y, TB163W, TB163Z, TB163X, TB163Y	

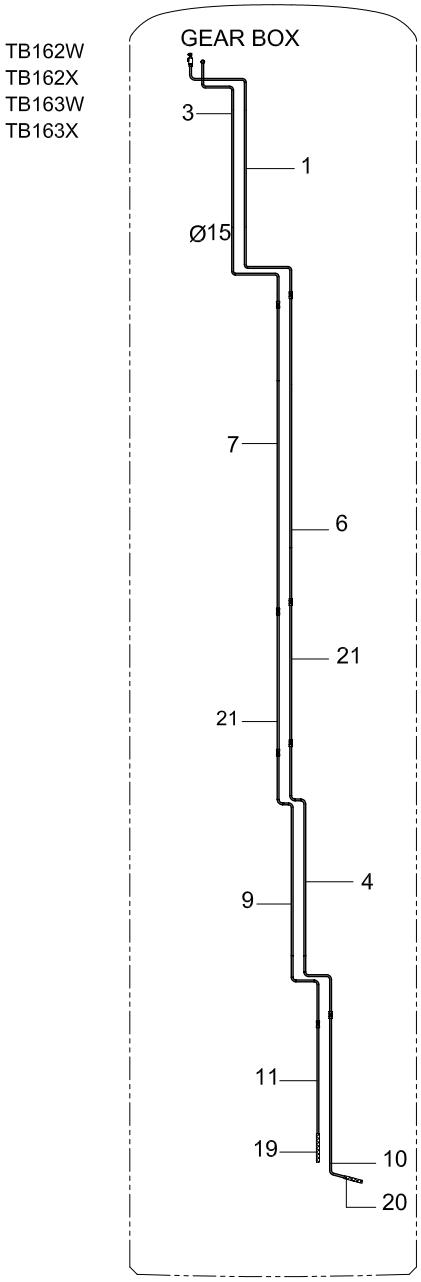

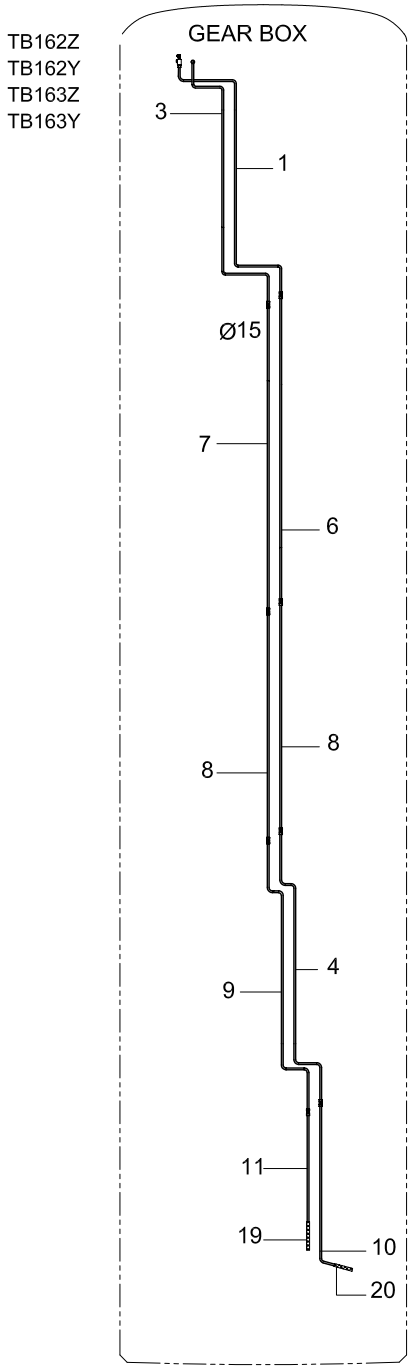

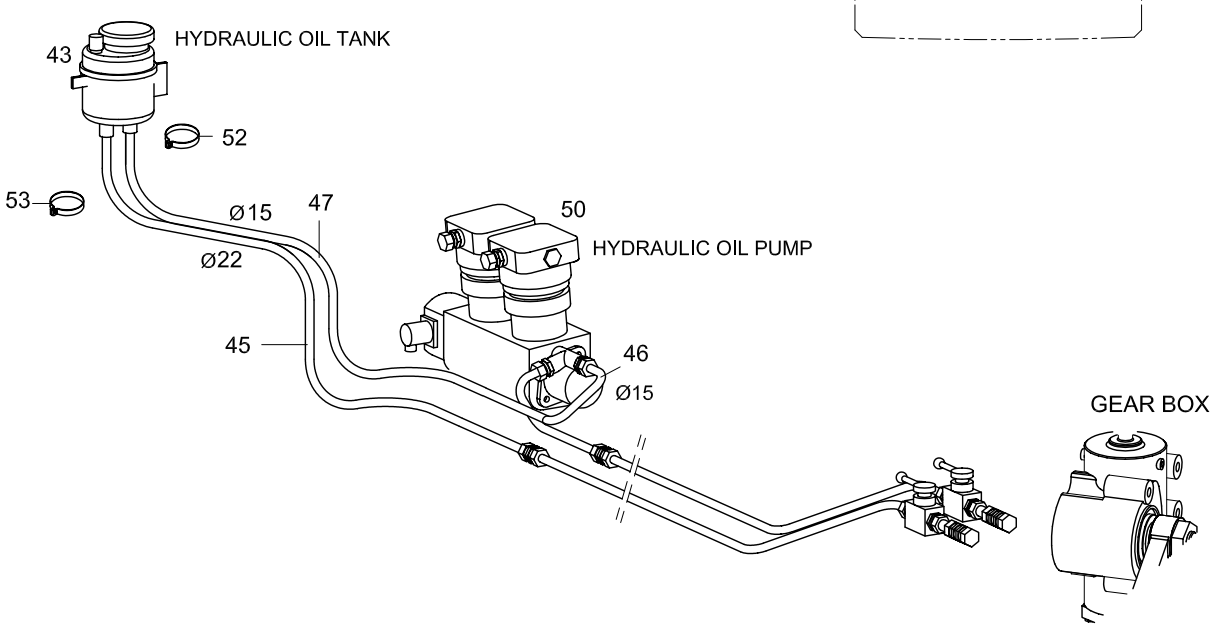

TEMSA	Direksiyon yağ boruları Power steering oil piping	Drw.no: 61102-90000-70/71 Vehicle Model: **TB162W, TB162Z, TB162X, TB162Y** **TB163W, TB163Z, TB163X, TB163Y**	**16-030** RevDate: Page: 1

Pos	Part Number	Turkish	English	German	Qty	R/P	From	Up To	Original Number Supplier
1	61102-96050-01Y	BORU	PIPE		1		1		
3	61102-96050-03Y	BORU	PIPE		1		1		
4	61102-96050-04Y	BORU	PIPE		1		1		
6	61102-96050-06Y	BORU	PIPE		1		1		
7	61102-96050-07Y	BORU	PIPE		1		1		
8	61102-96050-08Y	BORU	PIPE		1		1		
9	61102-96050-09Y	BORU	PIPE		1		1		
10	61102-96050-10Y	BORU	PIPE		1		1		
11	61102-96050-11Y	BORU	PIPE		1		1		
19	TC298303AY	HORTUM	HOSE		1		1		
20	TC298304AY	HORTUM	HOSE		1		1		
21	61102-96050-12Y	BORU	PIPE		1		1		
43	61707-90100-03Y	YAĞ TANKI	OIL TANK		1		1		
45	TH362022Y	HORTUM	HOSE		AR		1		D.22
46	61102-90020-09Y	BORU	PIPE		1		1		
47	TH362016Y	HORTUM	HOSE		AR		1		D.15
52	06.67128-6311	KELEPÇE	CLAMP		2		1		MAN
53	06.67128-0306	KELEPÇE	CLAMP		2		1		MAN

20 YAKIT
FUEL
x

20-010	Yakıt tankı Fuel Tank x	TB162W TB163W	TB162Z TB163Z	TB162X	TB162Y TB163Y
20-015	Yakıt tankı Fuel Tank x			TB163X	
20-020	Yakıt hattı Fuel Line x	TB162W TB163W	TB162Z TB163Z	TB162X TB163X	TB162Y TB163Y

TEMSA	Yakıt tankı Fuel Tank Kraftstofftank	Group No : 20-010 Draw. Num. : x Rev. Date : Page : 1
	Vehicle Model: TB162W, TB162Z, TB162X, TB162Y, TB163W, TB163Z, TB163Y	

up to 2004' 11.05

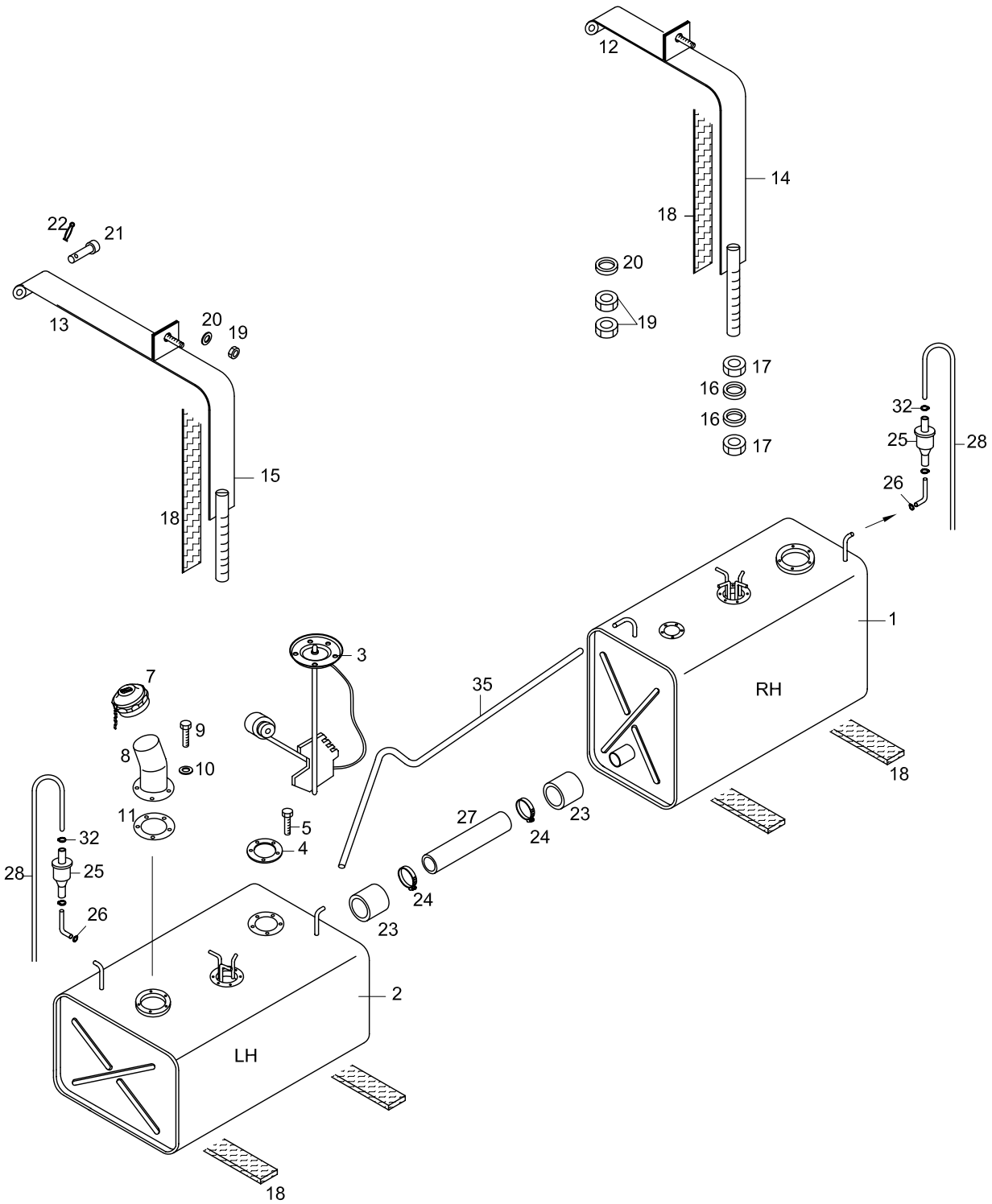

after 2004' 11.05

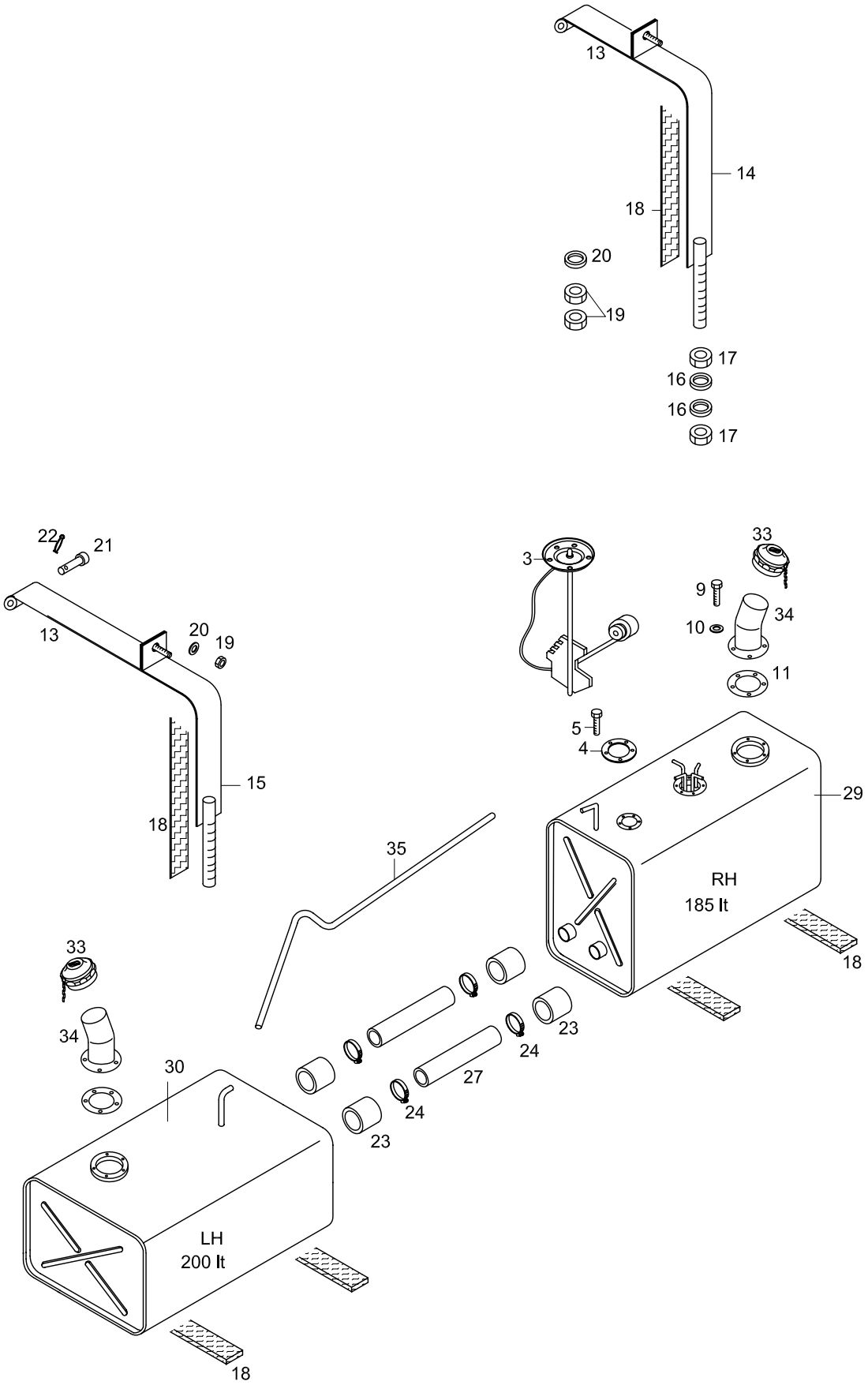

TEMSA	Yakıt tankı Fuel tank Kraftstofftank	Drw.no 61705-98500-72Y Vehicle Model: **TB162W, TB162Z, TB162X, TB162Y** **TB163W, TB163Z, TB163Y**	**20-010** RevDate: Page: 1

Pos	Part Number	Turkish	English	German	Qty	R/P	From	Up To	Original Number Supplier
1	61705-95100-71Y	YAKIT TANKI - SOL	FUEL TANK - LH		1		1	051104	
2	61705-95100-70Y	YAKIT TANKI - SAĞ	FUEL TANK - RH		1		1	051104	
3	61705-95050-12Y	ŞAMANDIRA	GAUGE UNIT		1		1		
4	61705-60000-07Y	CONTA	PACKING		1		1		
5	MF200051Y	VİDA	SCREW		AR		1		
7	TB125426Y	KAPAK	COVER		1		1	051104	
8	61705-94000-02Y	DEPO BOĞAZI	THROAT DEPO		1		1	051104	
9	MF100027Y	CIVATA M6*16*5,6	BOLT		AR		1		
10	MF450404Y	RONDELA	WASHER SPRING		AR		1		
11	61705-60050-09Y	CONTA	GASKET		1		1		
12	61705-94000-12Y	KUŞAK	BELT		2		1	051104	
13	61705-94000-13Y	KUŞAK	BELT		4		1		
14	61705-95120-70Y	KUŞAK	BELT		2		1		
15	61705-95120-71Y	KUŞAK	BELT		2		1		
16	MF450406Y	RONDELA	WASHER SPRING		AR		1		
17	MF430006Y	SOMUN M10*1,25	NUT		AR		1		
18	61705-60000-06Y	LASTİK ŞERİT	RUBBER SHIELD		10		1		
19	MF430005Y	SOMUN M8	NUT		AR		1		
20	MF450405Y	RONDELA	WASHER SPRING		8		1		
21	TM160123Y	PİM	PIN		4		1		
22	MF472037Y	KOPİLYA	PIN SPLIT		4		1		
23	61705-94110-00Y	YAKIT HORTUMU	HOSE FUEL		2		1	051104	
23	61705-94110-00Y	YAKIT HORTUMU	HOSE FUEL		4		051104		
24	MF661029Y	KELEPÇE	CLAMP		8		1		
25	81.52120-0029Y	YAKIT KONTROL VALFİ	CHECK VALVE FUEL		2		1		
26	TB390470Y	KELEPÇE	CLAMP		2		1		
27	61705-94120-70Y	BORU	PIPE		1		1	051104	
27	61705-94120-70Y	BORU	PIPE		2		051104		
28	MS612411Y	HORTUM	TUBE, SOFT VINLY		AR		1		
29	61705-95180-74Y	YAKIT TANKI SOL 200lt	FUEL TANK - LH		1		051104		
30	61705-95180-75Y	YAKIT TANKI - SAĞ 185lt	FUEL TANK - RH		1		051104		
32	MF661007Y	KELEPÇE	CLAMP		AR		1		
33	TB125427Y	DEPO KAPAĞI KOMPLE			2		051104		
34	61705-94000-03Y	DEPO BOĞAZI	THROAT DEPO		2		051104		
35	TH442016Y	HORTUM	HOSE		AR		1		

TEMSA	Yakıt tankı Fuel Tank Kraftstofftank	Group No : 20-015 Draw. Num. : x Rev. Date : Page : 1
	Vehicle Model: TB163X	

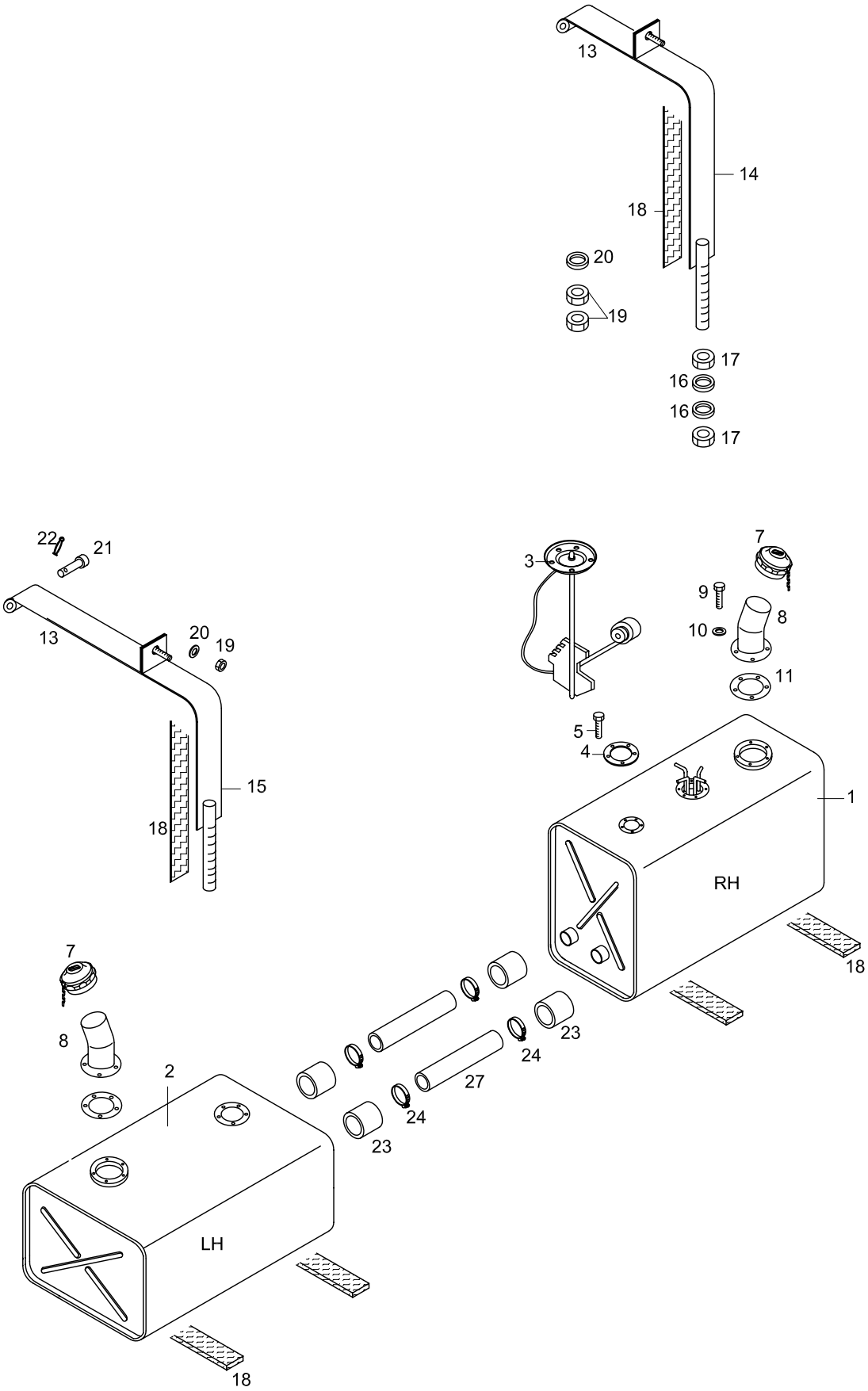

TEMSA	Yakıt tankı Fuel tank Kraftstofftank	Drw.no 61705-98500-70Y Vehicle Model: TB163X	20-015 RevDate: Page: 1

Pos	Part Number	Turkish	English	German	Qty	R/P	From	Up To	Original Number Supplier
1	61705-95180-71Y	YAKIT TANKI SOL	FUEL TANK - LH		1		311204		
2	61705-95180-72Y	YAKIT TANKI - SAĞ	FUEL TANK - RH		1		311204		
3	61705-95050-12Y	ŞAMANDIRA	GAUGE UNIT		1		1		
4	61705-60000-07Y	CONTA	PACKING		1		1		
5	MF200051Y	VİDA	SCREW		AR		1		
7	TB125426Y	KAPAK	COVER		2		1		
8	61705-94000-02Y	DEPO BOĞAZI	THROAT DEPO		2		1		
9	MF100027PY	CIVATA M6*16*5,6	BOLT		AR		1		
10	MF450404Y	RONDELA	WASHER SPRING		AR		1		
11	61705-60050-09Y	CONTA	GASKET		1		1		
13	61705-94000-13Y	KUŞAK	BELT		4		1		
14	61705-95120-70Y	KUŞAK	BELT		2		1		
15	61705-95120-71Y	KUŞAK	BELT		2		1		
16	MF450406PY	RONDELA	WASHER SPRING		AR		1		
17	MF430006Y	SOMUN M10*1,25	NUT		AR		1		
18	61705-60000-06Y	LASTİK ŞERİT	RUBBER SHIELD		10		1		
19	MF430005Y	SOMUN M8	NUT		AR		1		
20	MF450405Y	RONDELA	WASHER SPRING		8		1		
21	TM160123Y	PİM	PIN		4		1		
22	MF472037Y	KOPİLYA	PIN SPLIT		4		1		
23	61705-94110-00Y	YAKIT HORTUMU	HOSE FUEL		4		1		
24	MF661029Y	KELEPÇE	CLAMP		8		1		
25	81.52120-0029Y	YAKIT KONTROL VALFİ	CHECK VALVE FUEL		2		1		
26	TB390470Y	KELEPÇE	CLAMP		2		1		
27	61705-94120-70Y	BORU	PIPE		1		1		
28	MS612411Y	HORTUM	TUBE, SOFT VINLY		AR		1		
32	MF661007Y	KELEPÇE	CLAMP		AR		1		
35	TH442016Y	HORTUM	HOSE		AR		1		

TEMSA	Yakı hattı Fuel line Kraftstoffschläuche	Group No : 20-020 Draw. Num. : x Rev. Date : Page : 1
	Vehicle Model: TB162W, TB162Z, TB162X, TB162Y, TB163W, TB163Z, TB163X, TB163Y	

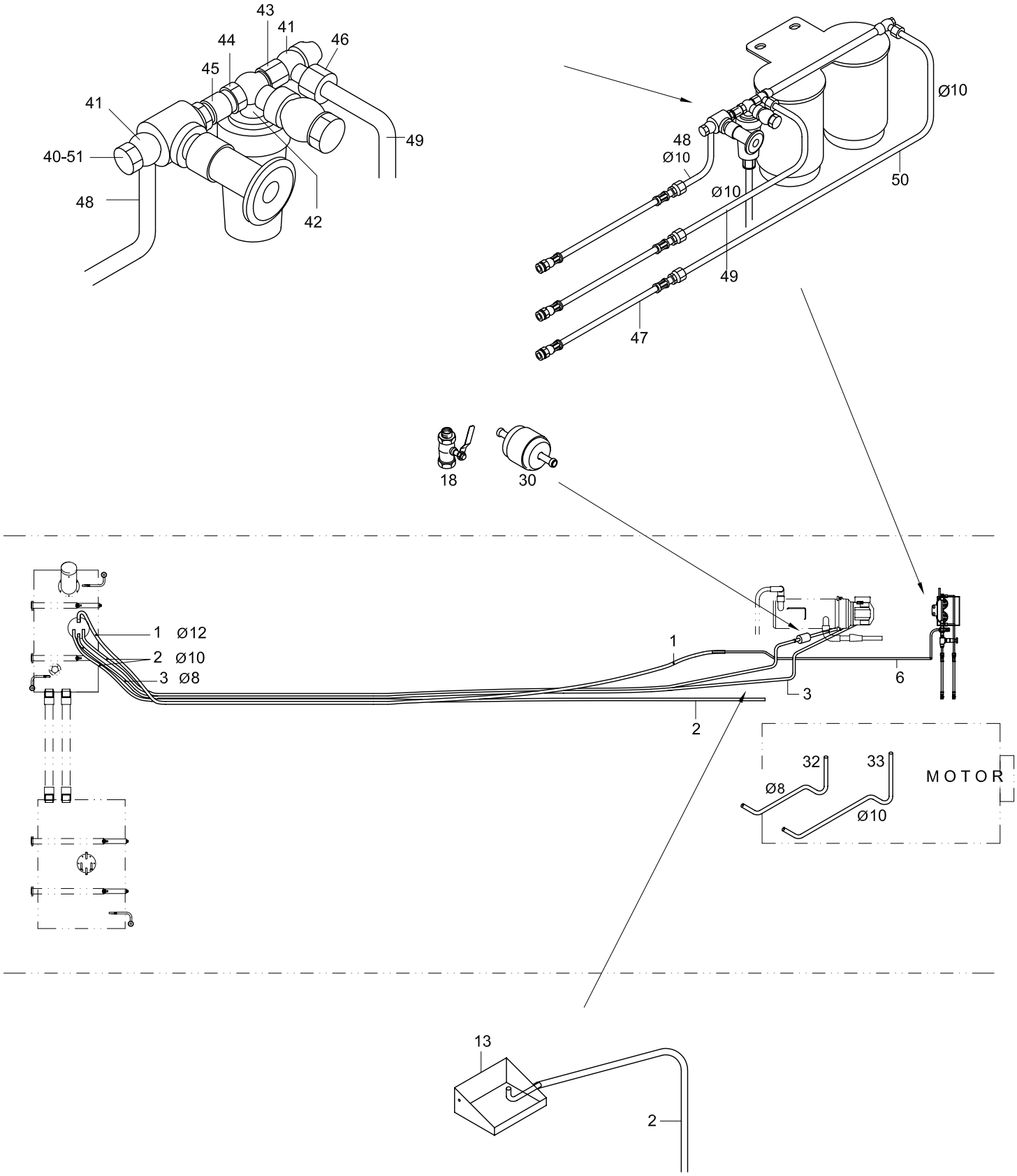

TEMSA	Yakıt hattı Fuel line Kraftstoffschläuche	Drw.no 61705-91900-70 Vehicle Model: **TB162W, TB162Z, TB162X, TB162Y** **TB163W, TB163Z, TB163X, TB163Y**	**20-020** RevDate: Page: 1

Pos	Part Number	Turkish	English	German	Qty	R/P	From	Up To	Original Number Supplier
1	TM163207Y	YAKIT HORTUMU	FUEL HOSE		AR		1		D.12
2	TM163153Y	YAKIT HORTUMU	FUEL HOSE		AR		1		D.10
3	TM163152Y	YAKIT HORTUMU	FUEL HOSE		AR		1		D.8
6	61705-91900-06Y	YAKIT BORUSU	FUEL PIPE		1		1		61705-91900-08
13	61705-91900-13Y	BRAKET	BRACKET		1		1		
18	TM214107Y	VANA	VALVE		1		1		
30	62348-30030-26Y	ÖN ISITMA YAKIT FİLTRESİ	FUEL FILTER PREHEATER		1		1	210204	WEBASTO
30	TC299157Y	ÖN ISITMA YAKIT FİLTRESİ	FUEL FILTER PREHEATER		1		210204		EBERSPACHER
32	61705-91900-32Y	YAKIT BORUSU	FUEL PIPE		1		1		TU310120Y
33	61705-91900-33Y	YAKIT BORUSU	FUEL PIPE		1		1		61705-91900-22
40	61705-91900-09Y	CIVATA	BOLT		3		1		
41	61705-91900-10Y	RAKOR	CONNECTOR		3		1		
42	61705-91900-11Y	RAKOR	CONNECTOR		1		1		
43	61705-91900-12Y	RAKOR	CONNECTOR		1		1		
44	61705-91900-16Y	RAKOR	CONNECTOR		1		1		
45	61705-91900-14Y	RAKOR	CONNECTOR		1		1		
46	61705-91900-15AY	SOMUN	NUT		3		1		
47	61705-91900-17Y	YAKIT HORTUMU	FUEL HOSE		3		1		L:900mm
48	61705-91900-18Y	YAKIT BORUSU	FUEL PIPE		1		1		
49	61705-91900-19Y	YAKIT BORUSU	FUEL PIPE		1		1		
50	61705-91900-20Y	YAKIT BORUSU	FUEL PIPE		1		1		
51	61705-91900-21Y	BAKIR PUL	WASHER COPPER		1		1		

21 HAVA
AIR
x

21-010	Hava tankı Air tank x	TB162W TB163W	TB162Z TB163Z	TB162X TB163X	TB162Y TB163Y
21-020	Fren boruları Brake air piping x	TB162W TB163W	TB162Z TB163Z	TB162X TB163X	TB162Y TB163Y
21-030	Hava kurutucu boruları Air dryer piping x	TB162W TB163W	TB162Z TB163Z	TB162X TB163X	TB162Y TB163Y

TEMSA	Hava tankı Air tank	Group No : 21-010 Draw. Num. : x Rev. Date : Page : 1
	Vehicle Model: TB162W, TB162Z, TB162X, TB162Y, TB163W, TB163Z, TB163X, TB163Y	

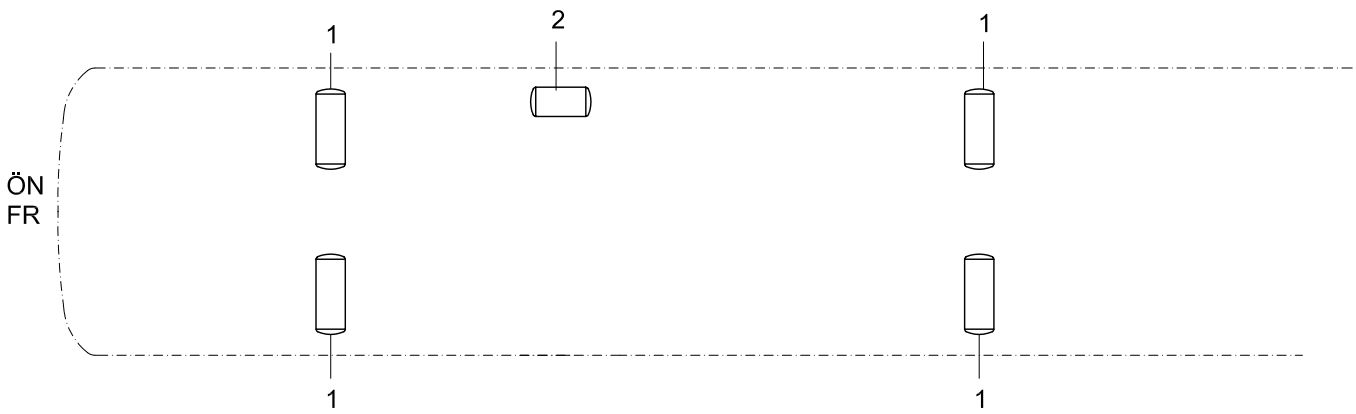

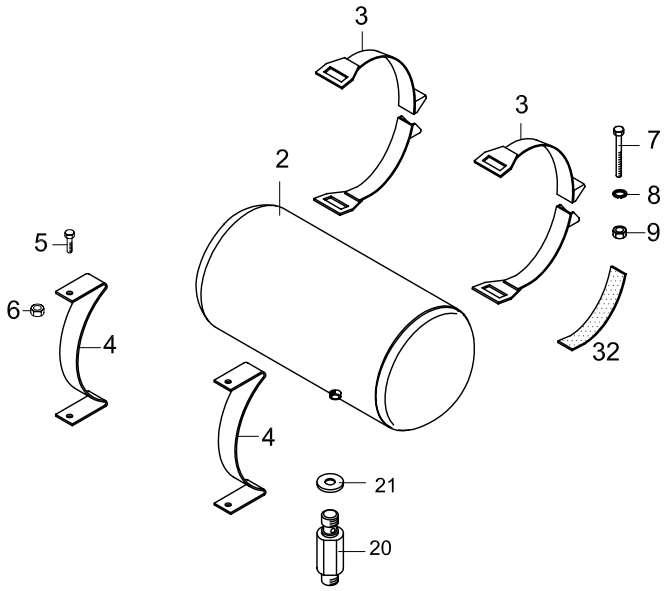

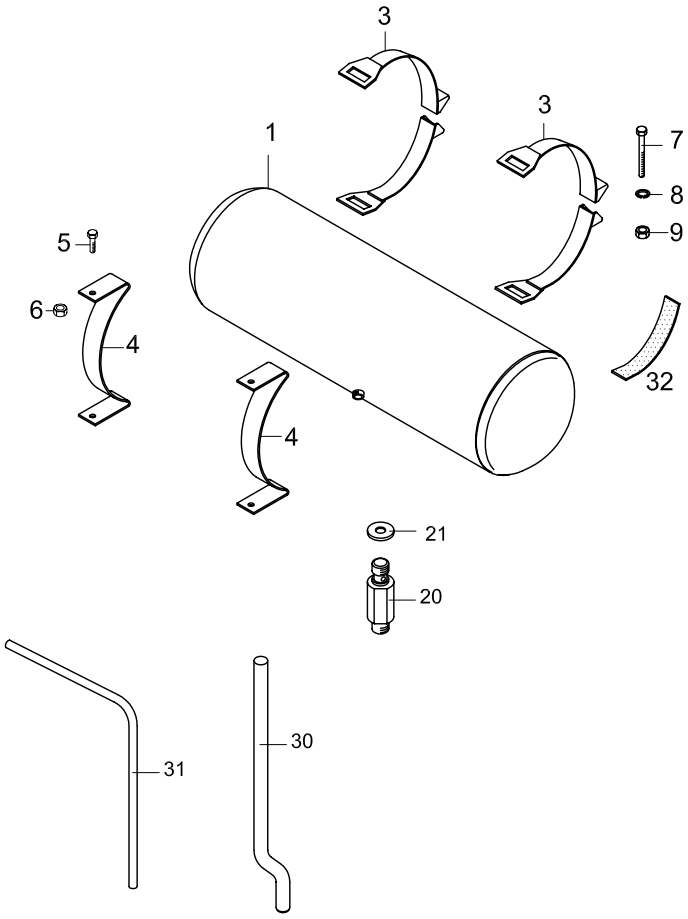

TEMSA	Hava tankı Air tank	Drw.no: 61706-96010-72Y Vehicle Model: **TB162W, TB162Z, TB162X, TB162Y** **TB163W, TB163Z, TB163X, TB163Y**	**21-010** RevDate: Page: 1

Pos	Part Number	Turkish	English	German	Qty	R/P	From	Up To	Original Number Supplier
1	TC363214-10Y	HAVA TANKI	AIR TANK		4		1	150504	
1	TC363214-01Y	HAVA TANKI	AIR TANK		4		150504		
2	TC298310-10Y	HAVA TANKI -2.5lt	AIR TANK		1		1	150504	
2	TC298310Y	HAVA TANKI -2.5lt	AIR TANK		1		150504		
3	MC372031Y	TANK KUŞAĞI	BAND BRACKET		16		1		
4	14843-99200Y	KUŞAK BRAKETİ	BRACKET, BAND		16		1		
5	MF100027Y	CIVATA M6*16	BOLT		AR		1		
6	MF430004Y	SOMUN M6	NUT		AR		1		
7	TF101270Y	CIVATA M8*80	BOLT		AR		1		
8	MF450405Y	RONDELA	WASHER SPRING		AR		1		
9	MF430005Y	SOMUN M8	NUT		AR		1		
20	TM152111	TAHLİYE VALFİ	DRAIN VALVE		5		1		466.1122.5 WIRA
21	TC298806-03	CONTA	O-RING		5		1		478.0022.5 WIRA
30	TM153040Y	POLYAMID HORTUM d.10	POLYAMIDE HOSE		AR		1		
31	61706-90010-05Y	BORU	PIPE		2		1		
32	TC298125Y	LASTİK ŞERİT	RUBBER STRIP		AR				L:6500mm

TEMSA

Fren boruları
Brake piping
Bremsleitungen

Vehicle Model: TB162W, TB162Z, TB162X, TB162Y, TB163W, TB163Z, TB163X, TB163Y

Group No : 21-020
Draw. Num. :
x
Rev. Date :
Page : 1

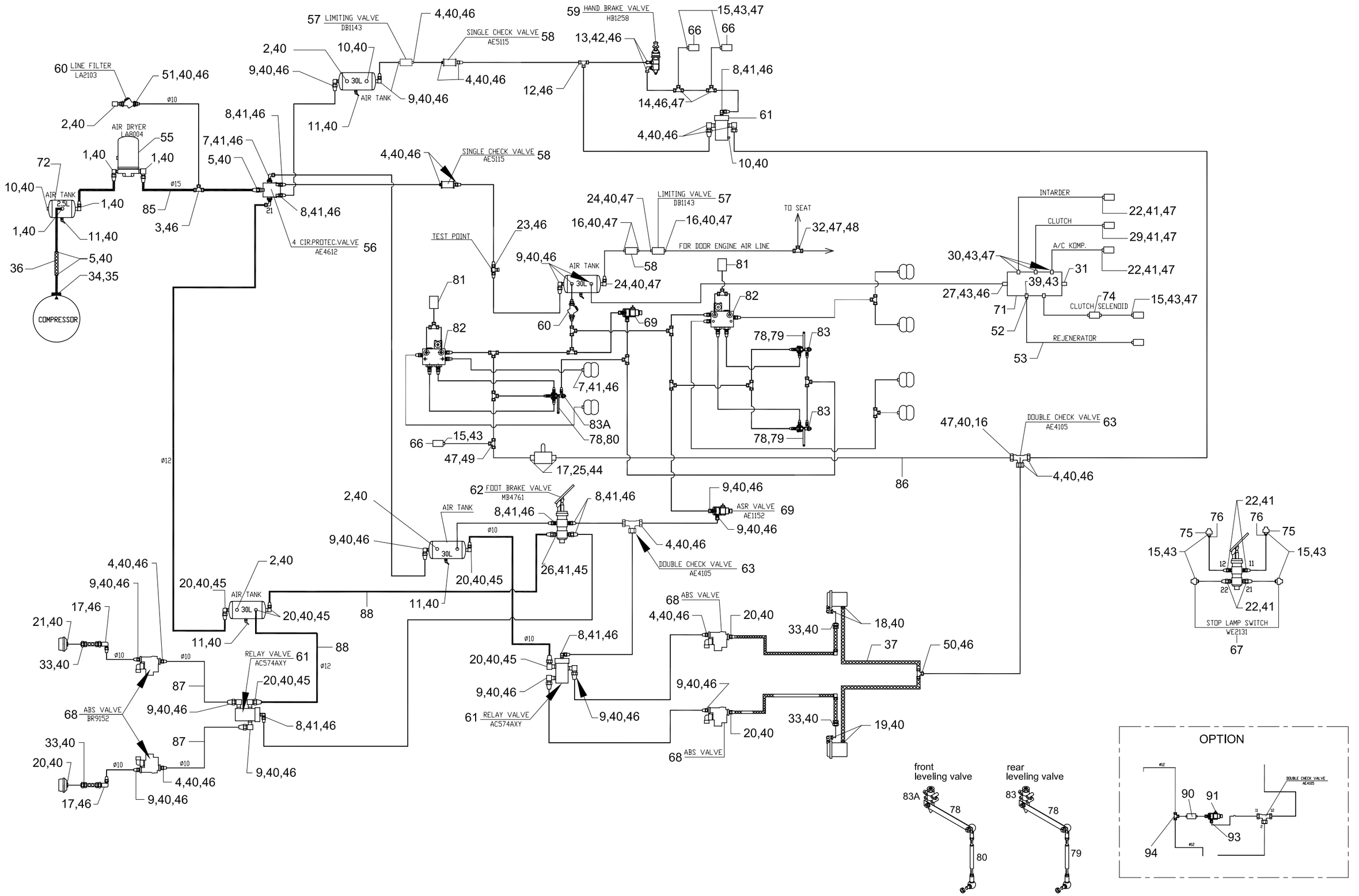

TEMSA	Fren boruları Brake pipng	Drw.no: TC298030-900 Vehicle Model: **TB162W, TB162Z, TB162X, TB162Y** **TB163W, TB163Z, TB163X, TB163Y**	**21-020** RevDate: Page: 1

Pos	Part Number	Turkish	English	German	Qty	R/P	From	Up To	Original Number Supplier
1	TC298100	L-KONNEKTÖR	L-CONNECTOR	L-VERBINDUNG	4		1		405.1524.2 WIRA
2	TC298101	TEST POINT	TEST POINT	KONTROLLPUNKT	4		1		465.0722.5 WIRA
3	TC298102	T-KONNEKTOR	T-CONNECTOR	T-VERBINDUNG	1		1		111.1510.2 WIRA
4	TC298806-50	DÜZ KONNEKTÖR	STRAIGHT COUPLING	GERADE KUPPLUNG	17		1		401.1022.2 WIRA
5	TC298103	KONNEKTÖR	CONNECTOR	VERBINDUNG	3		1		401.1523.2 WIRA
7	TM320134	KONNEKTÖR	CONNECTOR	VERBINDUNG	10		1		405.1016.2 WIRA
8	TM320136	KONNEKTÖR	CONNECTOR	VERBINDUNG	16		1		401.1016 WIRA
9	TC298806-15	KONNEKTÖR	CONNECTOR	VERBINDUNG	19		1		405.1022 WIRA
10	TM153277	KÖR TAPA	PLUG	ANSCHLUSSSTECKER	3		1		462.0322 WIRA
11	TM152111	TAHLİYE VALFİ	DRAIN VALVE	ABFLUSSVENTIL	5		1		466.1122.5 WIRA
12	TM320137	T-KONNEKTOR	T-CONNECTOR	T-VERBINDUNG	10		1		111.1010 WIRA
13	TC298806-31	KAPLİN	L-COUPLIN	L-KUPPLUNG	2		1		405.1014 WIRA
14	TC298105	T-KONNEKTOR	T-CONNECTOR	T-VERBINDUNG	3		1		111.1008 WIRA
15	TC298106	L-KONNEKTÖR	L-CONNECTOR	L-VERBINDUNG	8		1		405.0812 WIRA
16	TC298107	KONNEKTÖR	CONNECTOR	VERBINDUNG	4		1		401.0822 WIRA
17	TC298108	KONNEKTÖR	CONNECTOR	VERBINDUNG	2		1		103.1210 WIRA
18	TC298109	KONNEKTÖR	CONNECTOR	VERBINDUNG	2		1		465.1212 WIRA
19	TM152107	KONNEKTÖR	CONNECTOR	VERBINDUNG	4		1		401.1222 WIRA
20	TM152108	KONNEKTÖR	CONNECTOR	VERBINDUNG	9		1		405.1222 WIRA
21	TC298110	L-KONNEKTÖR	L-CONNECTOR	L-VERBINDUNG	1		1		465.1412 WIRA
22	TC298111	L-KONNEKTÖR	L-CONNECTOR	L-VERBINDUNG	7		1		405.0816 WIRA
23	TC298112	TEST POINT	TEST POINT	KONTROLLPUNKT	1		1		465.1310 WIRA
24	TC298113	L KONNEKTÖR	L CONNECTOR	L-VERBINDUNG	1		1		405.0822 WIRA
25	TM153262	KONNEKTÖR	CONNECTOR	VERBINDUNG	2		1		101.0810 WIRA
26	TC298114	KONNEKTÖR	CONNECTOR	VERBINDUNG	1		1		101.1216 WIRA
27	TC298806-54	DÜZ KONNEKTÖR	STRAIGHT COUPLING	GERADE KUPPLUNG	10		1		401.1012 WIRA
29	TC298115	KONNEKTÖR	CONNECTOR	VERBINDUNG	2		1		401.0816 WIRA
30	TM153109	KONNEKTÖR	CONNECTOR	VERBINDUNG	5		1		101.0812 WIRA
31	TM153107	KONNEKTÖR	PLUG	ANSCHLUSSSTECKER	3		1		462.0012 WIRA
32	TM153243	T KONNEKTÖR	T CONNECTÖR	T-VERBINDUNG	1		1		111.0806.2 WIRA
33	TC298116	KONNEKTÖR	CONNECTOR	VERBINDUNG	2		1		103.1212.2 WIRA
34	TC298119	L KONNEKTÖR	L-CONNECTOR	L-VERBINDUNG	1		1		405.1526.2 WIRA
35	TC298120	O-RING	O-RING	O-RING	1		1		478.0026.5 WIRA
36	TC298302-50Y	HORTUM	HOSE	ROHR	1		1		
37	TC298301Y	HORTUM	HOSE	ROHR	6		1		

TEMSA	Fren boruları Brake pipng	Drw.no: TC298030-900 Vehicle Model: TB162W, TB162Z, TB162X, TB162Y TB163W, TB163Z, TB163X, TB163Y	21-020 RevDate: Page: 2

Pos	Part Number	Turkish	English	German	Qty	R/P	From	Up To	Original Number Supplier
38	TC298306Y	HORTUM	HOSE	ROHR	1		1		
39	TC298122Y	ADAPTÖR	REDUCING SLEEVE	ADAPTER	1		5		
40	TC298806-03	SIZDIRMAZLIK ELEMANI	THRUST RING	SICHERUNGSRING	77		1		478.0022.5 WIRA
41	TC298806-02	SIZDIRMAZLIK ELEMANI	THRUST RING	SICHERUNGSRING	38		1		478.0016.5 WIRA
42	TC298806-30	SIZDIRMAZLIK ELEMANI	THRUST RING	SICHERUNGSRING	2		1		478.0014.5 WIRA
43	TC298806-53	SIZDIRMAZLIK ELEMANI	THRUST RING	SICHERUNGSRING	45		1		478.0012.5 WIRA
44	TM153263	SIZDIRMAZLIK ELEMANI	RING	SICHERUNGSRING	2		1		478.0010.5 WIRA
45	TU313101	RING	RING	SICHERUNGSRING	8		1		982.1215.5 WIRA
46	TM320135	İÇ YÜZÜK	RING	VERBINDUNGSRING	98		1		982.1010.5 WIRA
47	TM152109	İÇ YÜZÜK	RING INNER	VERBINDUNGSRING	26		1		682.0810.5 WIRA
48	TU310117	O-RING	O-RING	O-RING	1		1		982.0610.5 WIRA
49	TM153261	T-KONNEKTOR	T-CONNECTOR	T-VERBINDUNG	1		5		111.0808.2 WIRA
50	TC298121	T-KONNEKTOR	T-CONNECTOR	T-VERBINDUNG	1		1		111.1210.2 WIRA
51	TC298806-51	KONNEKTÖR	BULK HEAD CONNECTOR	VENTILVERBINDUNG	2		1		914.1022.2 WIRA
52	TC298123Y	ADAPTÖR	REDUCING SLEEVE	ADAPTER	1		1		
53	TC298124Y	POLYAMİD HORTUM	POLYAMIDE HOSE	POLYAMIDROHR	1		1		
55	TC298200	HAVA KURUTUCU	AIR DRYER	LUFTTROCKNER	1		1		LA8068 KNORR
56	TK355574	4 CIR PROTER VALVE	4 CIR PROTECT VALVE	4 KREISSICHERUNGS VENTIL	1		1		AE4612 KNORR
57	TC298201	LIMITING VALVE	LIMITING VALVE	BEGRENZUNGSVENTIL	2		1		DB1143 KNORR
58	TM153250	ÇEK VALF	CHECK VALVE	KONTROLLVENTIL	3		1		AE5115 KNORR
59	TC804585	EL FREN VALFİ	HAND CONTROL VALVE	MANUELLES KONTROLL VENTIL	1		1		HB1258 KNORR
60	03364-28001-00	HAVA FİLTRESİ	AIR FILTER	LUFTFILTER	2		1		LA2103 KNORR
61	TC298202	RELAY VALF	RELAY VALVE	RELAISVENTIL	3		1		AC574AXY KNORR
62	TC298203	AYAK FREN VALFİ	FOOT BRAKE VALVE	FUSSBREMSVENTIL	1		1		MB4761 KNORR
63	TC298806-24	2 YOLLU VALF	DOUBLE CHECK VALVE	2 WEGE VENTIL	2		1		AE4105 KNORR
65	TC298205	PİLOT VALF	PILOT VALVE	HAUPTVENTIL	1		1		AE1136 KNORR
66	TC298206	LOW PRESS SW	LOW PRES SWITCH	UNTERDRUCKSCHALTER	3		1		WE2135 KNORR
67	TC298207	STOP LAMP SW	STOP LAMP SWITCH	BREMSLICHTSCHALTER	2		1		WE2131 KNORR
68	TC298806-01	BASINÇ KONTROL VALFİ ABS VALFİ	SOLENOID VALVE ABS	KONTROLLVENTIL ABS	4		1		BR9152-II6278 KNORR
69	TK101452	MANYETİK VALF	SOLENOID VALVE	VENTIL	2		1		EA1152 KNORR
71	TC298208	MULTI KONN	MULTI CONNECTOR	MEHRFACHVERBINDUNG	1		1		
72	-	HAVA TANKI	AIR TANK	LUFTTANK	1		1		
74	TC298209	EXHAUST SOLENOID VALVE	EXHAUST SOLENOID VALVE	MAGNETSPULENVENTIL	1		1		
75	81.27421-0151	PRESSURE SİVİÇ	PRESSURE SWITCH	DRUCKSCHALTER	2		1		
76	61406-90000-18Y	ADAPTÖR	REDUCING SLEEVE	ADAPTER	2		1		

TEMSA	Fren boruları Brake pipng	Drw.no: TC298030-900 Vehicle Model: **TB162W, TB162Z, TB162X, TB162Y** **TB163W, TB163Z, TB163X, TB163Y**	**21-020** RevDate: Page: 3

Pos	Part Number	Turkish	English	German	Qty	R/P	From	Up To	Original Number Supplier
78	TC310170	VALF KOLU	ARM VALVE	ABZWEIGVENTIL	3		1		front and rear axle
79	TM260276AY	ROD SEVİYE AYAR	ROD, LEVELING	STABILISATORVENTIL	2		1		for rear axle
80	03360-89000-00Y	ROD SEVİYE AYAR	ROD, LEVELING	STABILISATORVENTIL	1		1		for front axle
81	TU311004	VALF	OVERFLOW VALVE	ÜBERLAUFVENTIL	2		1		DR4502 KNORR with kneeling c
82	TU311001	SELENOID VALVE	SOLENOID VALVE	ELEKTROMAGNETISCHES LUFTVENTIL	2		1		0 501 100 038 KNORR with kneeling c
83	TU311010	SEVİYE VALFİ	LEVELING VALVE	AUSGLEICHSVENTIL	3		1	220	
83	TU311002	SEVİYE VALFİ	LEVELING VALVE	AUSGLEICHSVENTIL	2	O	221		SV1318 KNORR for rear axle
83A	TU311003	SEVİYE VALFİ	LEVELING VALVE	AUSGLEICHSVENTIL	1	O	221		SV1321-II18034 KNORR for front axle
85	TM153299Y	BAKIR BORU	PIPE - COPPER	KUPFERROHR	10		1		
86	TM153030Y	POLYAMİD HORTUM	POLYAMIDE HOSE	POLYAMIDROHR	50		1		
87	TM153040Y	POLYAMİD HORTUM	POLYAMIDE HOSE	POLYAMIDROHR	99		1		
88	TC153080Y	POLYAMİD HORTUM	POLYAMIDE HOSE	POLYAMIDROHR	50		1		
90	TC298210	LIMITING VALVE	LIMITING VALVE	BEGRENZUNGSVENTIL	1		161		DB1116 KNORR
91	TU309109	ASR KABLOSU	ASR CABLE	ASR KABEL	1		161		EK3015/5000 KNORR
92	TC298806-03	O-RING	O-RING	O-RING	5		161		478.0022.5 WIRA
93	TC298806-55	L-KONNEKTÖR	L-CONNECTOR	L-VERBINDUNG	1		161		405.1012.2 WIRA
94	TU313101	PUL	RING	RING	2		161		982.1215.5 WIRA

TEMSA	Hava kurutucu boruları Air Dryer Piping Lufttrocknungsrohre	Group No : 21-030 Draw. Num. : x Rev. Date : Page : 1
	Vehicle Model: TB162W, TB162Z, TB162X, TB162Y, TB163W, TB163Z, TB163X, TB163Y	

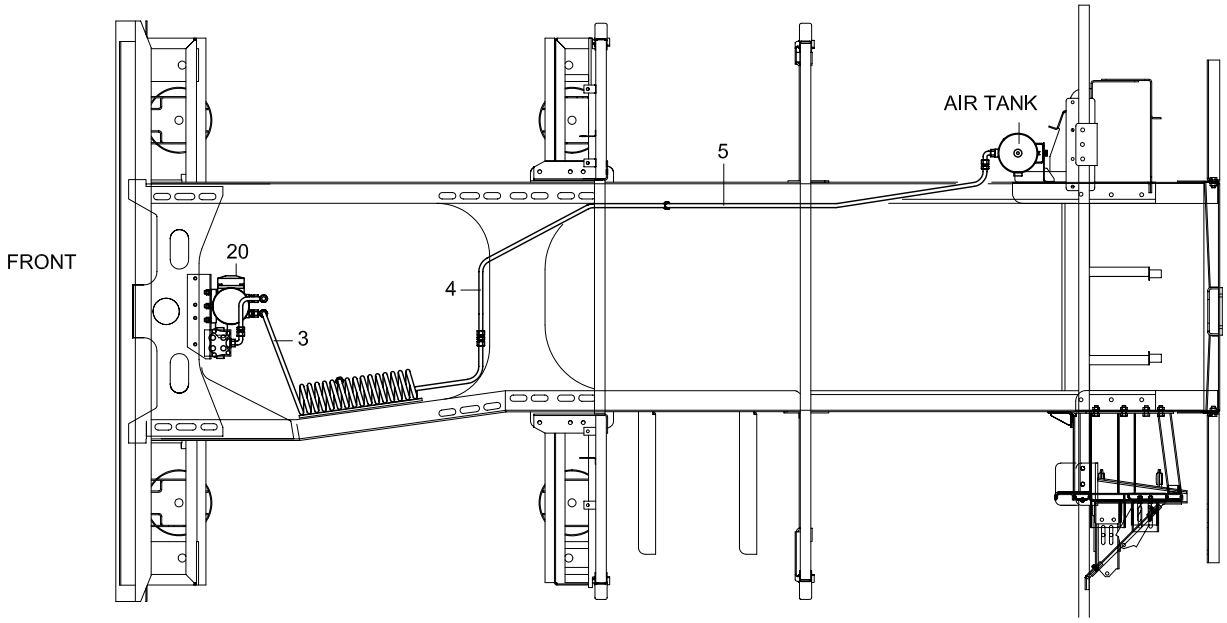

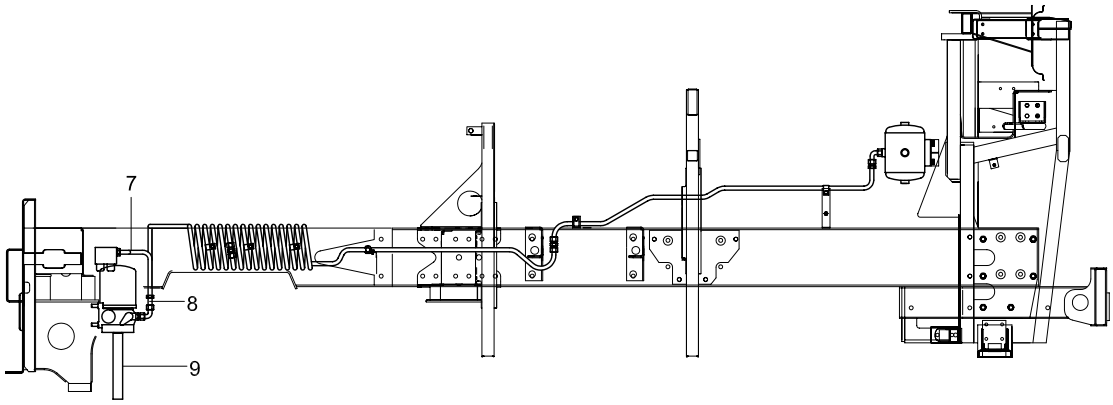

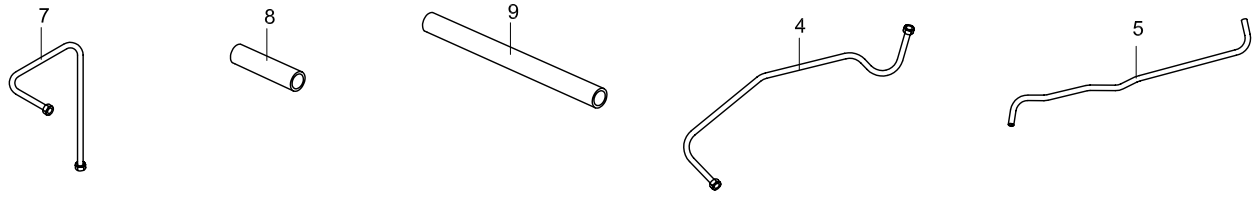

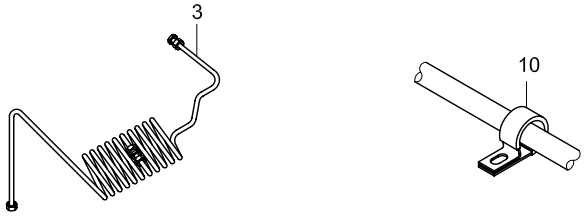

TEMSA	Air dryer piping	Drw.no: TC298550 Vehicle Model: **TB162W, TB162Z, TB162X, TB162Y** **TB163W, TB163Z, TB163X, TB163Y**	**21-030** RevDate: Page: 1

Pos	Part Number	Turkish	English	German	Qty	R/P	From	Up To	Original Number Supplier
3	61504-94026-06Y	BORU	PIPE	ROHR	1		1		
4	TC298500-04Y	BORU	PIPE	ROHR	1		1		
5	TC298500-05Y	BORU	PIPE	ROHR	1		1		
7	TC298500-07Y	BORU	PIPE	ROHR	1		1		
8	TC298500-08Y	BORU	PIPE	ROHR	1		1		
9	TU213112Y	HORTUM	HOSE	SCHLAUCH	AR		1		
10	TA275757Y	KLİP	CLIP	CLIPS	AR		1		
20	TC298212	HAVA KURUTUCU	AIR DRYER	LUFTROCKNER	1		1		SIL68A KNORR

22 EGZOZ
EXHAUST
x

22-010	Egzoz borusu ve susturucu Exhaust Pipe & Muffler x	TB162W	TB162Z	TB162X	TB162Y
22-011	Egzoz borusu ve susturucu Exhaust Pipe & Muffler x	TB163W	TB163Z	TB163X	TB163Y

TEMSA	Egzoz borusu ve susturucu Exhaust Pipe & Muffler Auspuffrohr und Schalldämpfer	Group No : 22-010 Draw. Num. : x Rev. Date : Page : 1
	Vehicle Model: TB162W, TB162Z, TB162X, TB162Y,	

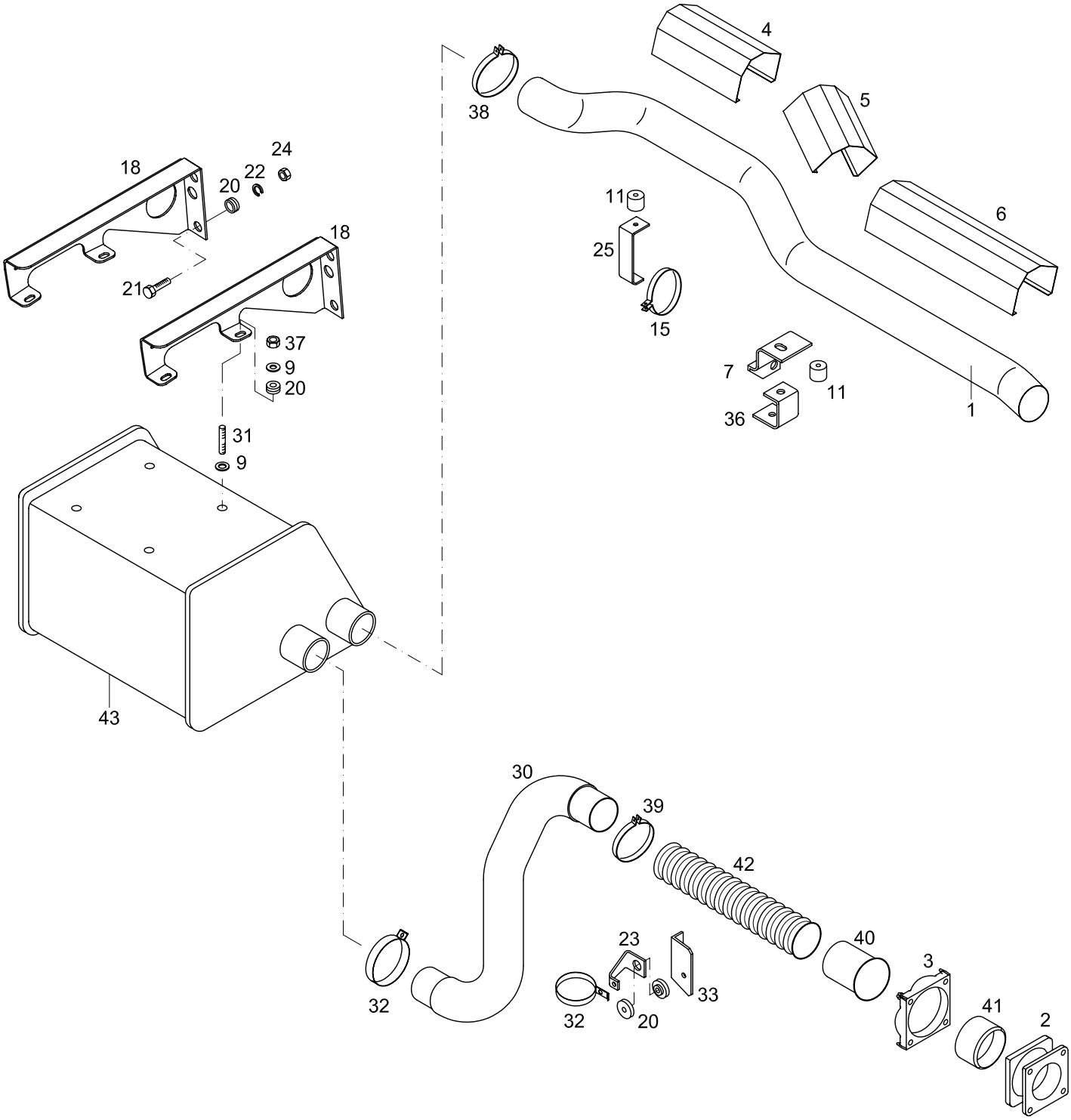

TEMSA	Egzoz borusu ve susturucu Exhaust pipe & muffler Auspuffrohr und Schalldämpfer	Drw.no: TC298822-70 Vehicle Model: 360ps **TB162W, TB162Z, TB162X, TB162Y**	**22-010** RevDate: Page: 1

Pos	Part Number	Turkish	English	German	Qty	R/P	From	Up To	Original Number Supplier
1	TC298822-164Y	EGZOZ BORUSU	EXHAUST PIPE		1		1		
2	TC298822-002Y	BORU	PIPE		1		1		
3	TC298822-003Y	FLANŞ	FLANGE		1		1		
4	TC298822-115Y	MUHAFAZA PANELİ	GUARD PANEL		1		1		
5	TC298822-116Y	MUHAFAZA PANELİ	GUARD PANEL		1		1		
6	TC298822-117Y	MUHAFAZA PANELİ	GUARD PANEL		1		1		
7	TC298822-140Y	Z- BRAKET	BRACKET -Z		1		1		
9	MF450006Y	PUL	WASHER PLAIN		AR		1		
11	81.96210-0101	LASTİK TAKOZ	RUBBER PAD		2		1		MAN
15	TC298822-122Y	KELEPÇE	CLAMP		1		1		
18	TC298822-119Y	SUSTURUCU BRAKETİ	BRACKET, MUFFLER		2		1		
20	81.96210-0247	LASTİK TAKOZ	RUBBER PAD		14		1		MAN
21	MF106118Y	CIVATA	BOLT		AR		1		
22	MF450407Y	RONDELA	WASHER SPRING		AR		1		
23	TC298822-132	U- BRAKET	BRACKET -U		1		1		
24	MF430007Y	SOMUN	NUT		AR		1		
25	TC298822-141Y	U- BRAKET	BRACKET -U		1		1		
30	TC298822-163Y	GİRİŞ BORUSU	PIPE INLET		1		1		
31	TC298822-131Y	SAPLAMA	STUD		4		1		
32	88.15640-0007	KELEPÇE	CLAMP		2		1		MAN
33	TC298822-133Y	L- BRAKET	BRACKET -L		1		1		
36	TC298822-142Y	U- BRAKET	BRACKET -U		1		1		
37	TF430006Y	SOMUN	NUT		AR		1		
38	81.97420-0076	KELEPÇE	CLAMP		1		1		
39	81.97420-0157	KELEPÇE	CLAMP		1		1		MAN
40	TC298822-040Y	MANİFOLD BORUSU	MANIFOLD		1		1		
41	TC298822-041Y	MANİFOLD BORUSU	MANIFOLD		1		1		
42	81.15210-0074	ESNEK BORU	FLEXIBLE TUBE		1		1		MAN
43	81.15101-0296	EGZOZ SUSTURUCUSU	MUFFLER - EXHAUST		1		1		MAN

TEMSA	Egzoz borusu ve susturucu Exhaust Pipe & Muffler Auspuffrohr und Schalldämpfer	Group No : 22-011 Draw. Num. : x Rev. Date : Page : 1
	Vehicle Model: TB163W, TB163Z, TB163X, TB163Y	

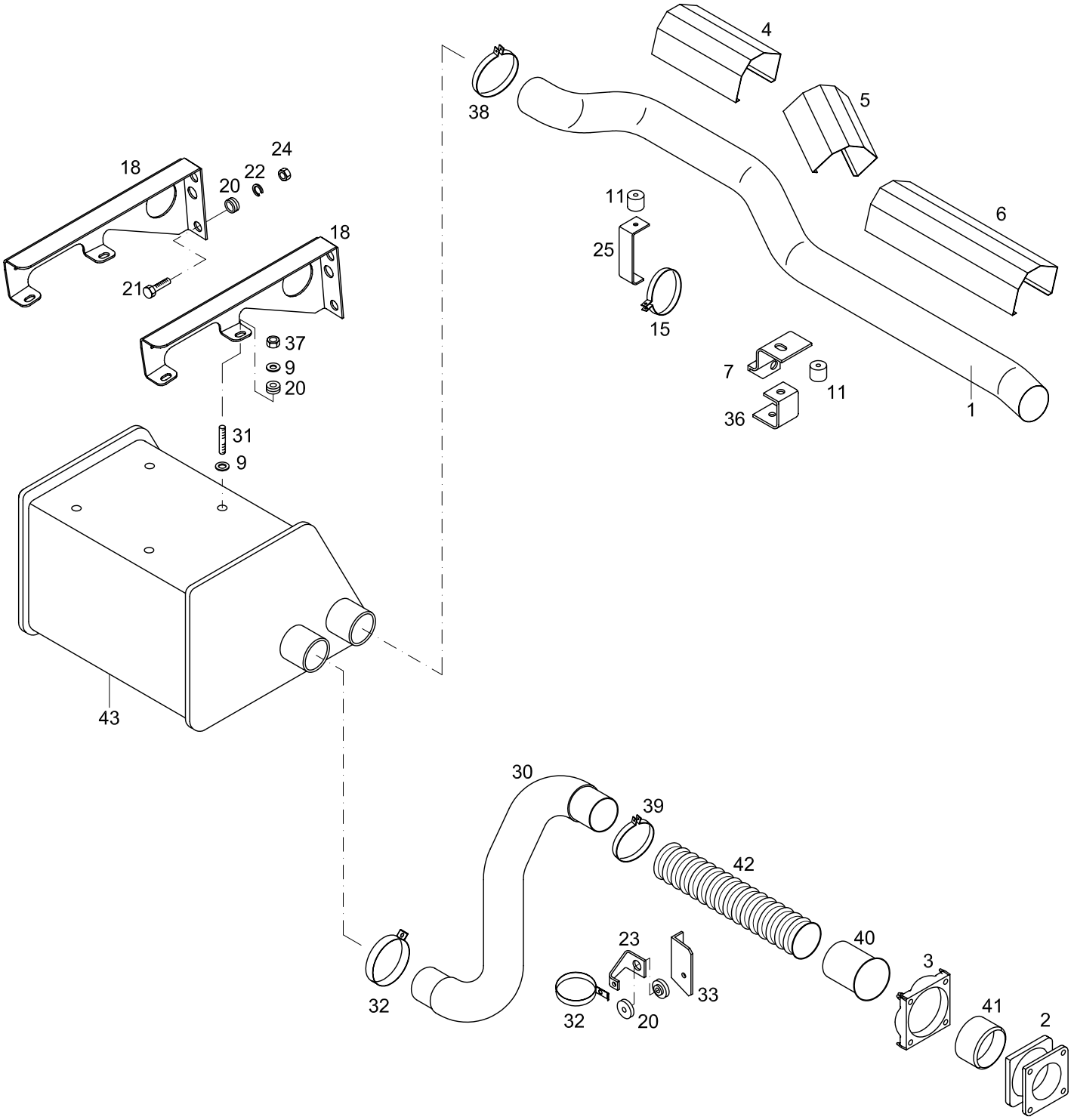

TEMSA	Egzoz borusu ve susturucu Exhaust pipe & muffler Auspuffrohr und Schalldämpfer	Drw.no: TC298822-76Y Vehicle Model: 410ps TB163W, TB163Z, TB163X, TB163Y	22-011 RevDate: Page: 1

Pos	Part Number	Turkish	English	German	Qty	R/P	From	Up To	Original Number Supplier
1	TC298822-450Y	EGZOZ BORUSU (D=118X1.5)			1		180604		
2	TC298822-002Y	BORU	PIPE		1		1		
3	TC298822-003Y	FLANŞ	FLANGE		1		1		
4	TC298822-115Y	MUHAFAZA PANELİ	GUARD PANEL		1		1		
5	TC298822-116Y	MUHAFAZA PANELİ	GUARD PANEL		1		1		
6	TC298822-117Y	MUHAFAZA PANELİ	GUARD PANEL		1		1		
7	TC298822-140Y	Z- BRAKET	BRACKET -Z		1		1		
9	MF450006Y	PUL	WASHER PLAIN		AR		1		A10.5
11	81.96210-0101	LASTİK TAKOZ	RUBBER PAD		2		1		MAN
15	TC298822-122Y	KELEPÇE	CLAMP		1		1		
18	TC298822-119Y	SUSTURUCU BRAKETİ	BRACKET, MUFFLER		2		1		
20	81.96210-0247	LASTİK TAKOZ	RUBBER PAD		14		1		MAN
21	MF106118Y	CIVATA	BOLT		AR		1		M12*1.25*50
22	MF450407Y	RONDELA	WASHER SPRING		AR		1		A12
23	TC298822-132Y	U- BRAKET	BRACKET -U		1		1		
24	MF430007Y	SOMUN	NUT		AR		1		M12*1.25
25	TC298822-141Y	U- BRAKET	BRACKET -U		1		1		
30	TC298822-163Y	GİRİŞ BORUSU	PIPE INLET		1		1		
31	TC298822-131Y	SAPLAMA	STUD		4		1		
32	88.15640-0007	KELEPÇE	CLAMP		2		1		
33	TC298822-133Y	L- BRAKET	BRACKET -L		1		1		
36	TC298822-142Y	U- BRAKET	BRACKET -U		1		1		
37	TF430006Y	SOMUN	NUT		AR		1		M10*1.5
38	81.97420-0076	KELEPÇE	CLAMP		1		1		MAN
39	81.97420-0157	KELEPÇE	CLAMP		1		1		MAN
40	TC298822-040Y	MANİFOLD BORUSU	MANIFOLD		1		1		
41	TC298822-041Y	MANİFOLD BORUSU	MANIFOLD		1		1		
42	81.15210-0074	ESNEK BORU	FLEXIBLE TUBE		1		1		MAN
43	81.15101-0296	EGZOZ SUSTURUCUSU	MUFFLER - EXHAUST		1		1		MAN

23 KLİMA VE KOMPRESÖR
AIR CONDITION & COMPRESSOR
x

23-010	Klima Air Conditioner x	TB162W TB163W	TB162Z TB163Z	TB162X TB163X	TB162Y TB163Y
23-020	Klima kompresörü Compressor, Air Conditioner x	TB162W TB163W	TB162Z TB163Z	TB162X TB163X	TB162Y TB163Y

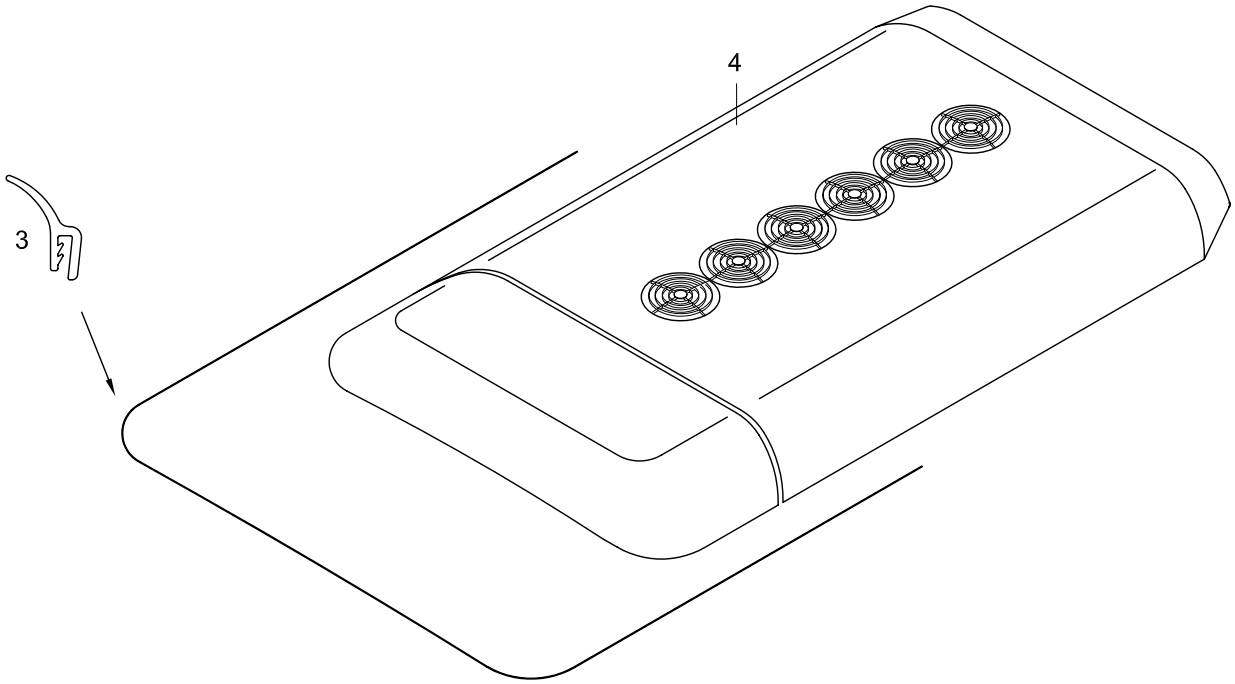
4
3

option

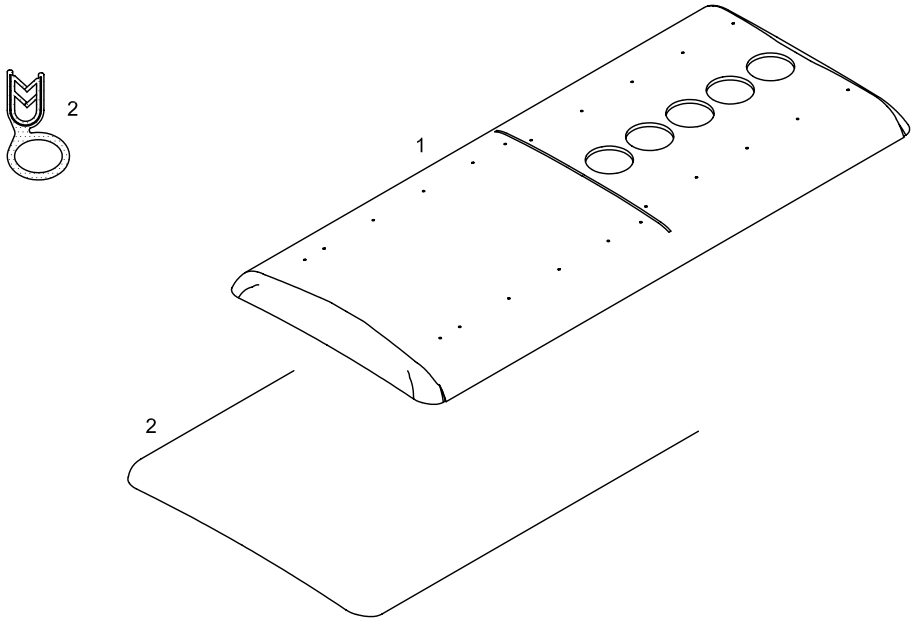

TEMSA	Klima Air conditioner Klima	Drw.no: 62305-96126-70/-97026-70/98026-70/97026-70 Vehicle Model: **TB162W, TB162Z, TB162X, TB162Y** **TB163W, TB163Z, TB163X, TB163Y**	**23-010** RevDate: Page: 1

Pos	Part Number	Turkish	English	German	Qty	R/P	From	Up To	Original Number Supplier
1	AC353BT324A	TAVANDAN ISITMALI SÜTRAK KLIMA SETİ	AIR CONDITIONER SET		SET		1		SÜTRAK
1	AC353FA	TAVANDAN ISITMALI SÜTRAK KLIMA SETİ	AIR CONDITIONER SET		SET		1		SÜTRAK
2	TU299109Y	FİTİL	WEATHER STRIP		MT		1		18MT
3	TU232110Y	ŞEFFAF FİTİL	SOFT PVC MOULDING		11mt		1		
4	62305-97020-00Y	KLİMA SETİ SAFKAR	AIR CONDITIONER - SET SAFKAR		SET		1		ES362/TS - 28000 btu
4	62305-96020-00Y	KLİMA SETİ SAFKAR	AIR CONDITIONER - SET SAFKAR		SET		1		ES360/TS- 24000 btu
4	62305-98020-00Y	KLİMA SETİ SAFKAR - ISITMALI	AIR CONDITIONER - SET SAFKAR - HEATING		SET		1		ES360/TSH -24000 btu
4	62305-98020-10Y	KLİMA SETİ SAFKAR - ISITMALI	AIR CONDITIONER - SET SAFKAR - HEATING		SET		1		ES362/TSH -28000 btu
4	62305-94020-10Y	KLİMA SETİ SAFKAR	AIR CONDITIONER - SET SAFKAR		SET		1		ES362/TS - 28000 btu

TEMSA	Klima kompresörü Compressor, Air Conditioner Klimakompressor	Group No : 23-020 Draw. Num. : x Rev. Date :
	Vehicle Model: TB162W, TB162Z, TB162X, TB162Y, TB163W, TB163Z, TB163X, TB163Y	Page : 1

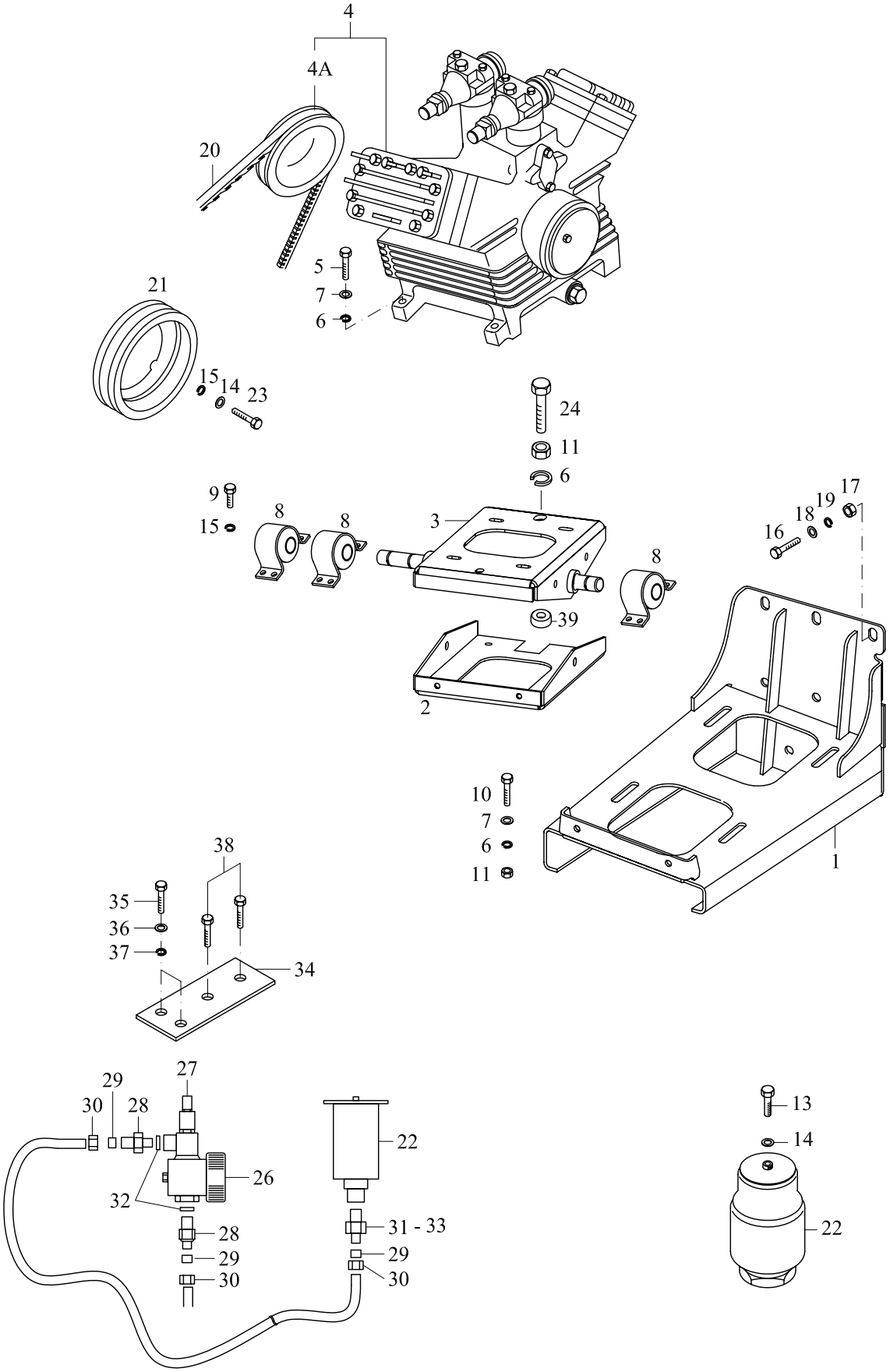

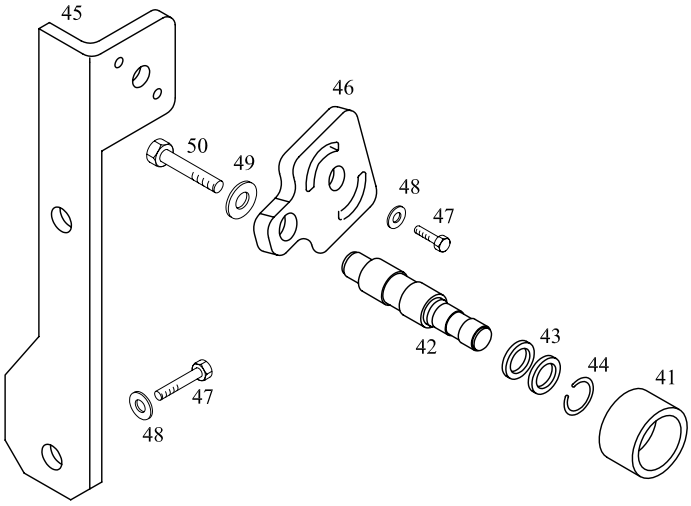
45
46
50
49
48
47
42
43
44
41
47
48

TEMSA	Klima kompresörü Compressör, air conditioner Klimakompressor	Drw.no 62309-96027-70 / 62309-98027-70 Vehicle Model: **TB162W, TB162Z, TB162X, TB162Y** **TB163W, TB163Z, TB163X, TB163Y**	**23-020** RevDate: Page: 1

Pos	Part Number	Turkish	English	German	Qty	R/P	From	Up To	Original Number Supplier
1	62309-90030-70AY	KONSOL	CONSOLE		1		1		
2	62309-90028-01CY	ALT KIZAK	SLIDING		1		1		
3	62309-90028-02BY	ÜST KIZAK	SLIDING		1		1		
4	62309-90020-08	KOMPESÖR+KASNAK	COMPRESSSOR+ PULLEY		1		1	110105	BOCK: FKX40/560K
4	62309-90020-08	KOMPESÖR+KASNAK	COMPRESSSOR+ PULLEY		1		110105		BITZER: 4PFCY
4	62309-90020-09	KOMPESÖR+KASNAK	COMPRESSSOR+ PULLEY		1		1	110105	BOCK: FKX40/655K
4	62309-90020-09	KOMPESÖR+KASNAK	COMPRESSSOR+ PULLEY		1		110105		BITZER 4NFCY
4A	KK73.1.112N D:193	MANYETİK KASNAK	MAGNETIC PULLEY		1		1	110105	FOR BOCK: FKX40/560K
4A	KK73.1.112N D:193	MANYETİK KASNAK	MAGNETIC PULLEY		1		110105		FOR BITZER: 4PFCY
4A	LA 16.258 D:163	MANYETİK KASNAK	MAGNETIC PULLEY		1		1	110105	FOR BOCK: FKX40/655K
4A	LA 16.258 D:163	MANYETİK KASNAK	MAGNETIC PULLEY		1		110105		FOR BITZER 4NFCY
5	TF101319Y	CIVATA	BOLT		4		1		M12*1.75*55
6	MF450407Y	RONDELA	WASHER SPRING		AR		1		A12
7	MF450007Y	PUL	WASHER PLAIN		8		1		A12
8	62309-70037-01Y	YATAK	HOUSE		3		1		
9	MF100051Y	CIVATA	BOLT		12		1		M8*12
10	MF100116Y	CIVATA	BOLT		4		1		M12*40
11	MF430007Y	SOMUN	NUT		AR		1		M12*1.25
13	MF100055Y	CIVATA	BOLT		AR		1		M8*1.25*20
14	MF450005Y	PUL	WASHER PLAIN		AR		1		A8.5
15	MF450405Y	RONDELA	WASHER SPRING		AR		1		A8
16	MF101344Y	CIVATA	BOLT		6		1		M14*40
17	MF430008Y	SOMUN	NUT		AR		1		M14*1.25
18	MF450008Y	PUL	WASHER PLAIN		6		1		A14
19	MF450408Y	RONDELA	WASHER SPRING		6		1		A14
20	62309-94027-50Y	V - KAYIŞ 2/ xpb2150	V-BELT 2/ xpb2150		1		1	010504	FOR BOCK: FKX40/560K
20	62309-94027-55Y	V - KAYIŞ 2/ xpb2140	V-BELT 2/ xpb2140		1		010504		FOR BOCK: FKX40/560K
20	62309-94027-55Y	V - KAYIŞ 2/ xpb2140	V-BELT 2/ xpb2140		1		110105		FOR BITZER: 4PFCY
20	62309-90027-60Y	V - KAYIŞ 2/ xpb2000	V-BELT 2/ xpb2000		1		1		FOR BOCK: FKX40/655K
20	62309-90027-60Y	V - KAYIŞ 2/ xpb2000	V-BELT 2/ xpb2000		1		110105		FOR BITZER 4NFCY
21	62309-90016-01Y	KASNAK	PULLEY		1		1		
22	62309-90000-11Y	KÖRÜK	BELLOWS		1		1		CONTITECH SZ 35-11
23	MF101263Y	CIVATA	BOLT		8		1		M8*40
24	62309-90027-51Y	CIVATA	BOLT		1		1		
26	62309-70278-01Y	VALF	CONNECTOR		1		1		SÜTRAK

TEMSA	Klima kompresörü Compressör, air conditioner Klimakompressor	Drw.no 62309-96027-70 / 62309-98027-70 Vehicle Model: **TB162W, TB162Z, TB162X, TB162Y** **TB163W, TB163Z, TB163X, TB163Y**	**23-020** RevDate: Page: 2

Pos	Part Number	Turkish	English	German	Qty	R/P	From	Up To	Original Number Supplier
27	TU181001-48	VENTİL	VENTIL		1		1		
28	62309-90027-38Y	KONNEKTÖR	CONNECTOR		2		1		
29	TM153102	DIŞ YÜZÜK	OUTER RING		3		1		
30	TM153101	SOMUN	NUT		3		1		
31	62309-90027-31Y	KONNEKTÖR	CONNECTOR		1		1		
32	TU181159	PUL	WASHER PLAIN		2		1		
33	TU181001-48	REDÜKSÜYON	REDUCTION		1		1		
34	62309-90027-34AY	PLAKA	PLATE		1		1		
35	MF100027Y	CIVATA	BOLT		2		1		M6*16
36	MF450004Y	PUL	WASHER PLAIN		AR		1		A6.4
37	MF450404Y	RONDELA	WASHER SPRING		AR		1		A6
38	MF200088Y	VİDA	SCREW MACHINE		2		1		6*45
39	62309-90027-39Y	LASTİK TAKOZ	RUBBER PROTECTOR		1		1		
41	62309-90028-50Y	MAKARA	ROLLER		1		1	?	OPTION
42	62309-90028-51Y	ŞAFT	SHAFT		1		1	?	OPTION
43	62309-90028-54Y	RULMAN	DEEP GROOVE BALL BEARING		2		1	?	OPTION
44	MF522003Y	SEGMAN	SPRING RETAINER RING		1		1	?	OPTION
45	62309-90028-52Y	MARAKA AYAĞI	ROLLER STEAM		1		1	?	OPTION
46	62309-90028-53Y	MARAKA AYAĞI	ROLLER STEAM		1		1	?	OPTION
47	MF100083Y	CIVATA M10*20	BOLT		5		1	?	OPTION
48	MF450006Y	PUL	WASHER		5		1	?	OPTION
49	MF399034Y	PUL	WASHER		1		1	?	OPTION
50	MF100051Y	CIVATA M8*12	BOLT		1		1	?	OPTION

TEMSA

24 ISITMA
HEATING
x

24-001	Kutu kalorifer Heaterbox x	TB162W TB163W			
24-005	Kalorifer - 02.07.2004 e kadar Central heating - up to 2004'07.02 x	TB162W TB163W			
24-006	Kalorifer - 02.07.2004 den sonra Central heating - after 2004'07.02 x	TB162W TB163W			
24-007	Kalorifer - tuvaletli - 02.07.2004 e kadar Central heating- with toilet - up to 2004'07.02 x	TB162W TB163W			
24-008	Kalorifer - tuvaletli - 02.07.2004 den sonra Central heating- with toilet- after 2004'07.02 x	TB162W TB163W			
24-009	Kalorifer - Sütrak A/C Central heating- Sütrak A/C x	TB162W TB163W			
24-010	Kalorifer - 02.07.2004 e kadar Central heating - up to 2004'07.02 x		TB162Z TB163Z		
24-011	Kalorifer - 02.07.2004 den sonra Central heating - after 2004'07.02 x		TB162Z TB163Z		
24-012	Kalorifer - tuvaletli - 02.07.2004 e kadar Central heating- with toilet - up to 2004'07.02 x		TB162Z TB163Z		
24-013	Kalorifer - tuvaletli - 02.07.2004 den sonra Central heating- with toilet- after 2004'07.02 x		TB162Z TB163Z		
24-014	Kalorifer Central heating x			TB162X TB163X	
24-015	Kalorifer Central heating x				TB162Y TB163Y
24-020	Sıcak su boruları - 02.07.2004 e kadar Heater piping - up to 2004'07.02 x	TB162W TB163W		TB162X TB163X	
24-021	Sıcak su boruları - 02.07.2004 den sonra Heater piping - after 2004'07.02 x	TB162W TB163W		TB162X TB163X	
24-022	Sıcak su boruları - 02.07.2004 e kadar Heater piping - up to 2004'07.02 x		TB162Z TB163Z		TB162Y TB163Y
24-023	Sıcak su boruları - 02.07.2004 den sonra Heater piping - after 2004'07.02 x		TB162Z TB163Z		TB162Y TB163Y
24-030	Ön ısıtma ünitesi Preheather Unit x	TB162W TB163W	TB162Z TB163Z	TB162X TB163X	TB162Y TB163Y

24-040	Defroster	TB162W	TB162Z	TB162X	TB162Y
	Defroster	TB163W	TB163Z	TB163X	TB163Y
	x				

TEMSA	Kutu kalorifer Heaterbox x	Group No : 24-001 Draw. Num. : x Rev. Date : Page : 1	

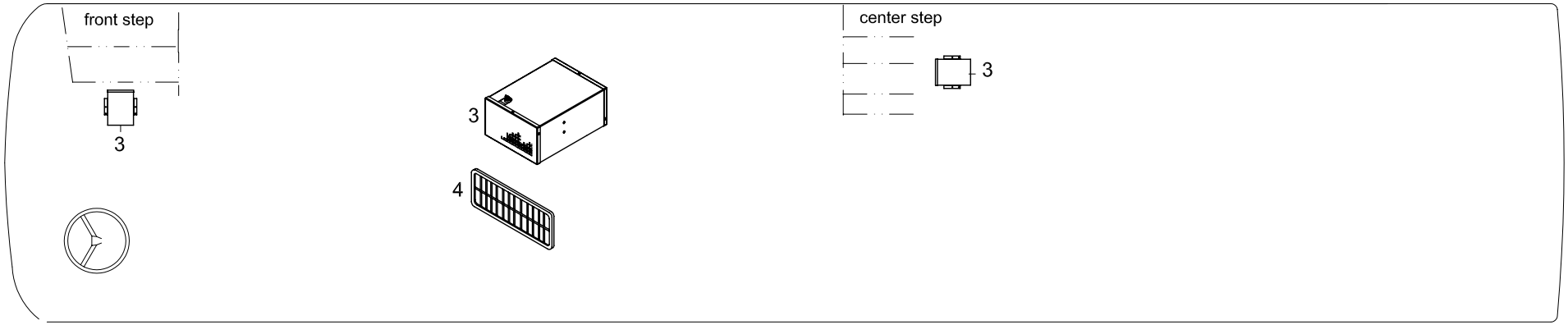

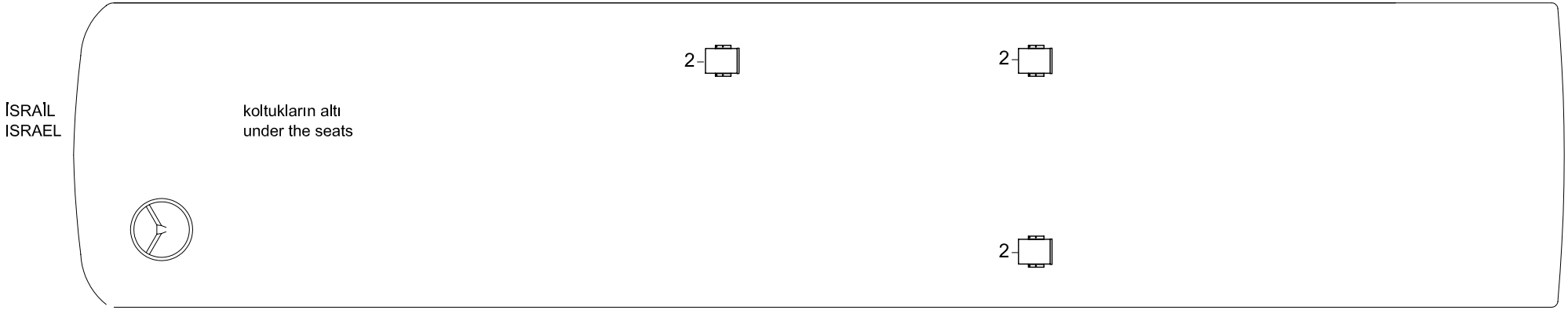

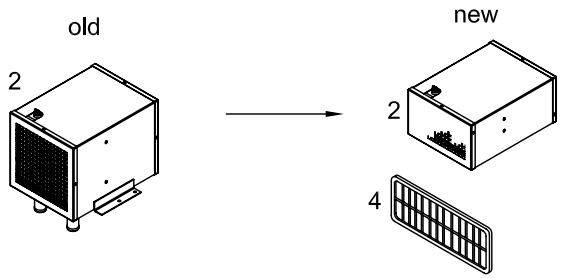

TEMSA	Kutu kalorifer Heaterbox	Drw.no: 62323-96060-70 Vehicle Model: **TB162W** **TB163W**	**24-001** RevDate: Page: 1

Pos	Part Number	Turkish	English	German	Qty	R/P	From	Up To	Original Number Supplier
2	55050244Y	KUTU KALORİFER	HEATERBOX		3		1	140304	FOR ISRAEL
2	55050254Y	KUTU KALORİFER	HEATERBOX		3		140304		FOR ISRAEL
3	55050214Y	KUTU KALORİFER	HEATERBOX		2		1	140304	
2	55050254Y	KUTU KALORİFER	HEATERBOX		2		140304		
4	35077013Y	IZGARA	AIR GRILLE		2		1		

TEMSA	Kalorifer - 02.07.2004 e kadar Central heating - up to 2004' 07.02 Heizung	Group No : 24-005 Draw. Num. : x Rev. Date : Page : 1
	Vehicle Model: TB162W, TB163W,	

Standart - for SAFKAR A/C

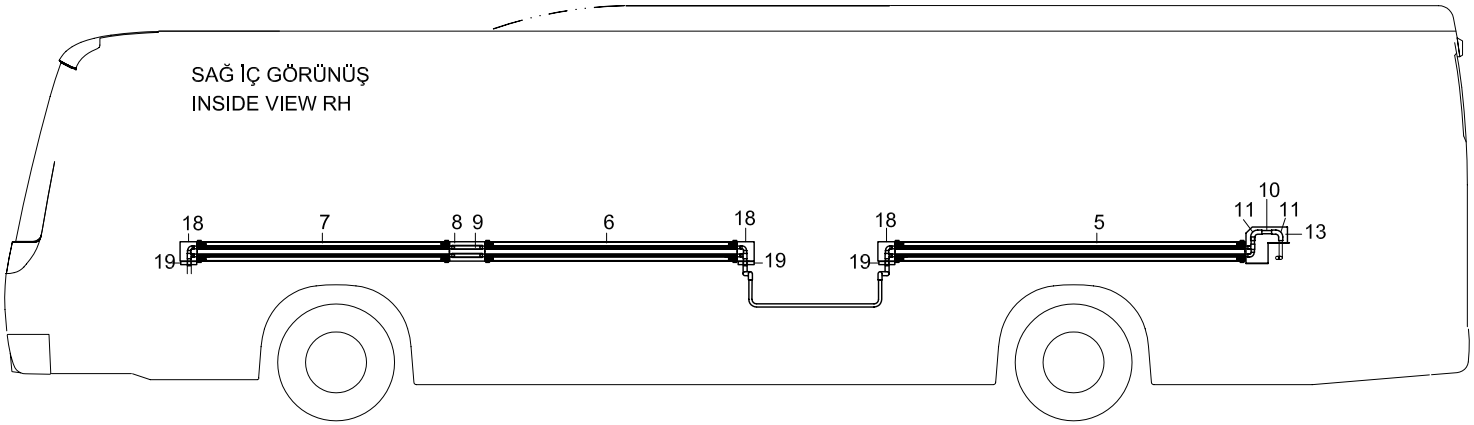

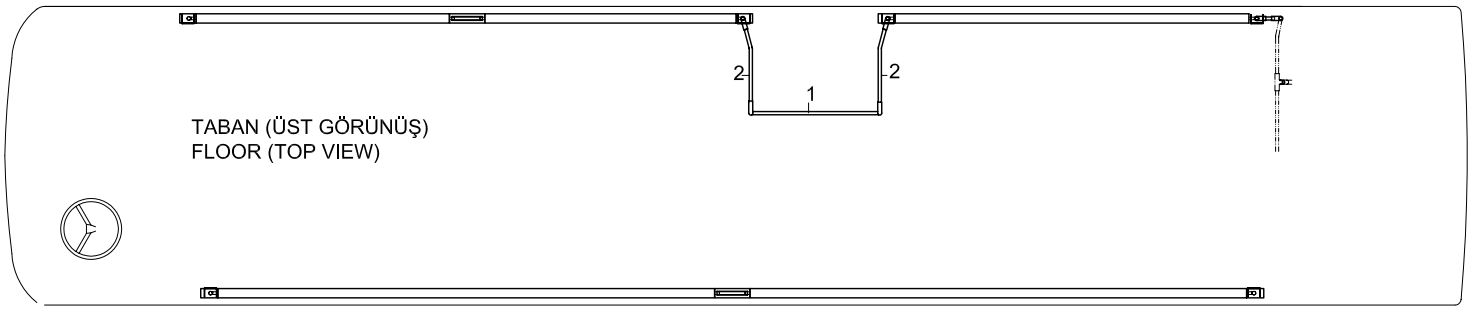

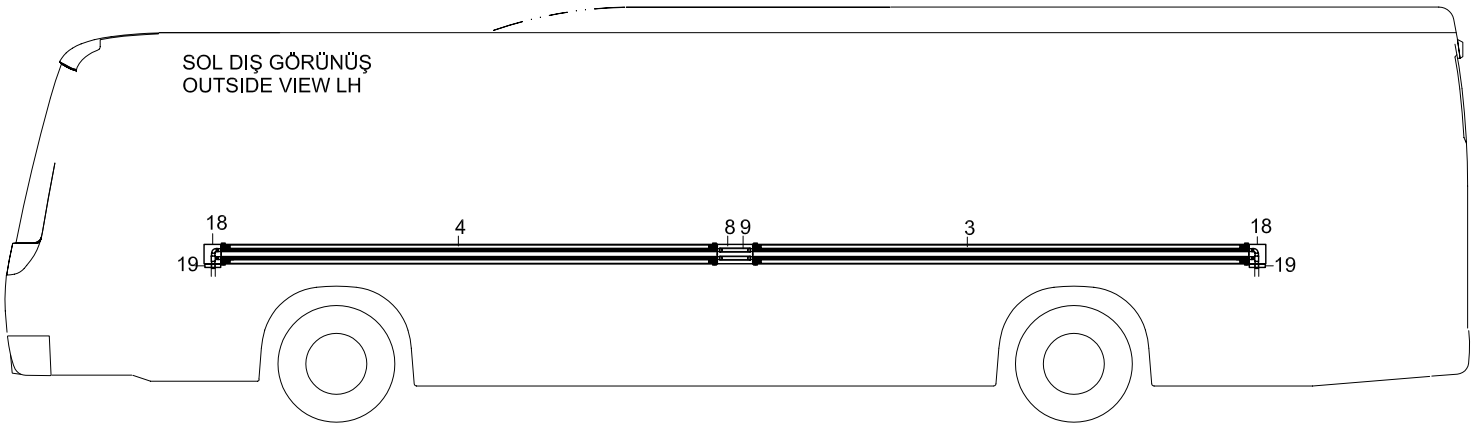

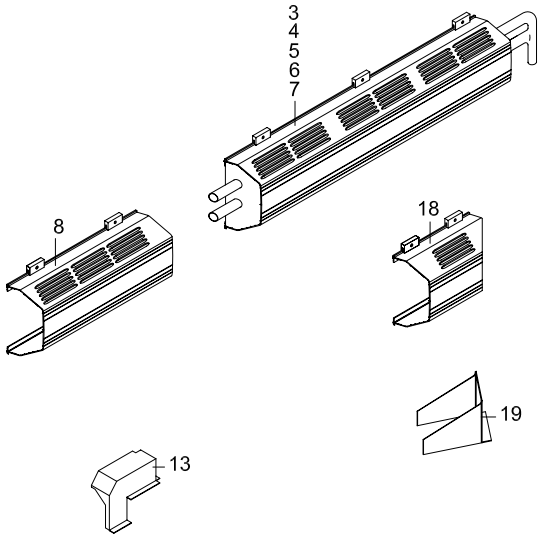

TEMSA	Kalorifer - 02.07.2004 e kadar Central heating - up to 2004'07.02 Heizung	Drw.no: 62323-96010-70 Vehicle Model: **TB162W** **TB163W**	**24-005** RevDate: Page: 1

Pos	Part Number	Turkish	English	German	Qty	R/P	From	Up To	Original Number Supplier
*	62323-96010-65Y	KONVEKTÖR SETİ	CONVECTION HEATER SET		SET		1	020704	SAFKAR
1	62323-96010-01Y	KALORİFER BORUSU	PIPE HEATER		1		1	020704	
2	62323-96010-02Y	KALORİFER BORUSU	PIPE HEATER		2		1	020704	
3	62323-96010-03X	KONVEKTÖR	CONVECTION HEATER		1		1	020704	SAFKAR L:4150mm
4	62323-96010-04X	KONVEKTÖR	CONVECTION HEATER		1		1	020704	SAFKAR L:4150mm
5	62323-96010-05X	KONVEKTÖR	CONVECTION HEATER		1		1	020704	SAFKAR L:2950mm
6	62323-96010-06X	KONVEKTÖR	CONVECTION HEATER		1		1	020704	SAFKAR L:2150mm
7	62323-96010-07X	KONVEKTÖR	CONVECTION HEATER		1		1	020704	SAFKAR L:2150mm
8	62323-96010-08X	ARA KAPAK	COVER CENTER		2		1		SAFKAR L:290mm
9	TH166022Y	HORTUM d.20	HOSE		AR		1		
10	62323-96010-10Y	KALORİFER BORUSU	PIPE HEATER		1		1	020704	
11	TU213119Y	HORTUM DİRSEK	HOSE ELBOW		6		1		
13	62323-96010-14Y	ARKA UÇ KAPAK	COVER- REAR END		1		1		
18	62323-94010-10X	UÇ KAPAK	COVER END		5		1	020704	SAFKAR L:140mm
19	62323-94010-16Y	KAPAK	COVER		5		1		

TEMSA	Kalorifer - 02.07.2004 den sonra Central heating - after 2004' 07.02 Heizung	Group No : 24-006 Draw. Num. : x Rev. Date : Page : 1
	Vehicle Model: TB162W, TB163W,	

Standart - for SAFKAR A/C

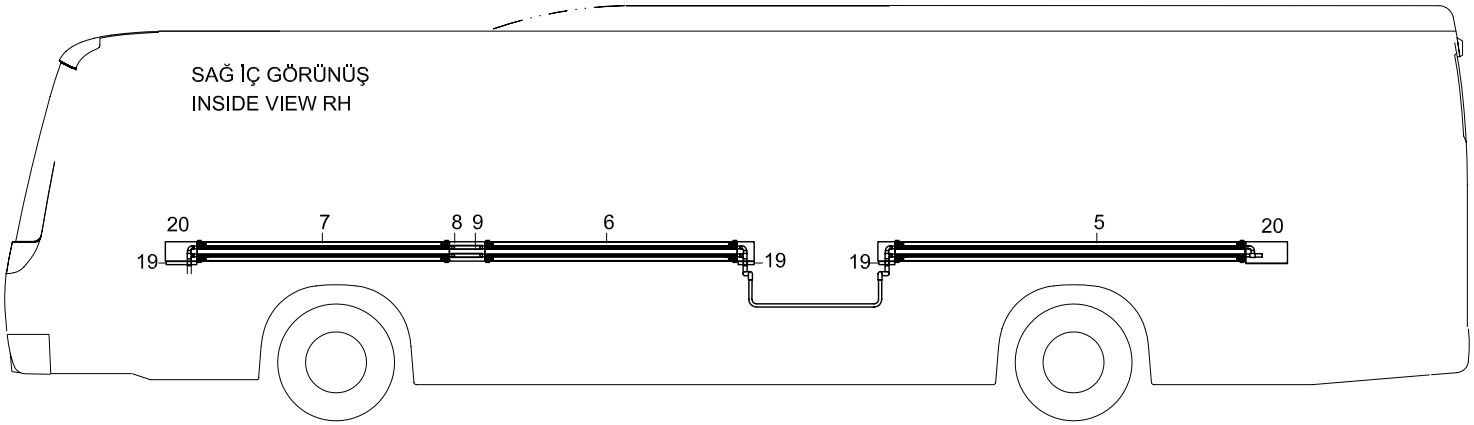

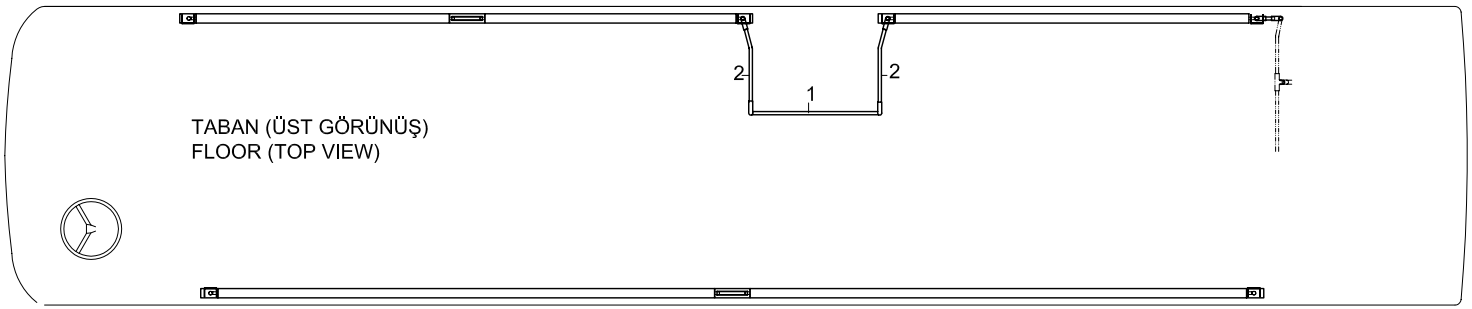

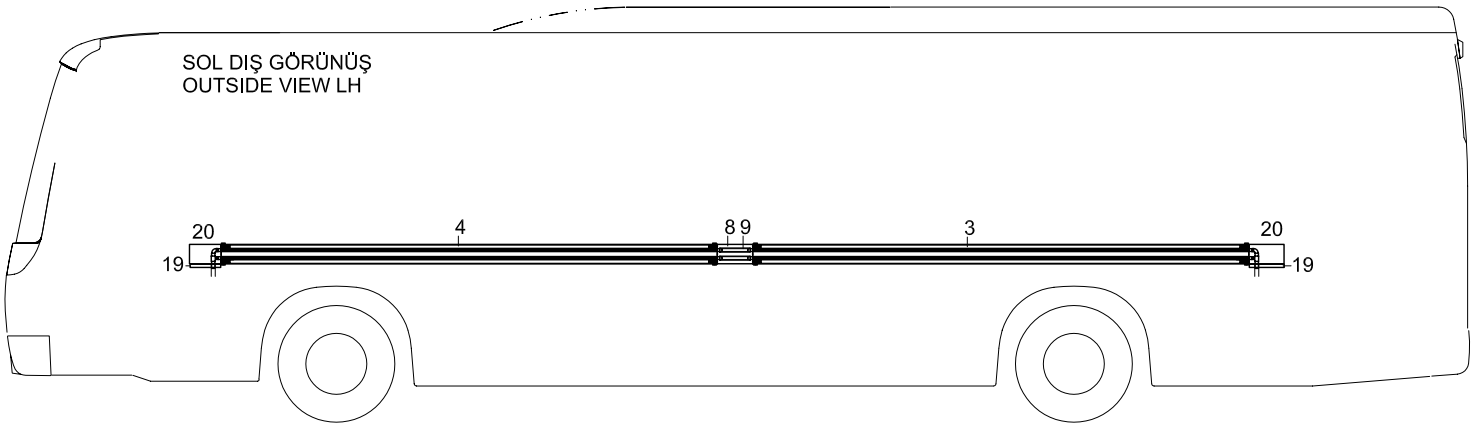

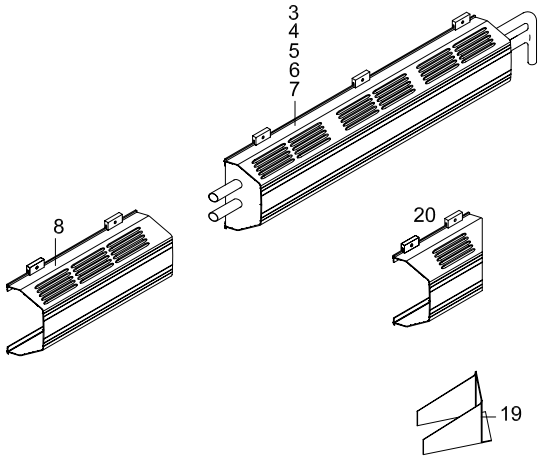

TEMSA	Kalorifer - 02.07.2004 den sonra Central heating - after 2004'07.02 Heizung	Drw.no: 62323-96010-70 Vehicle Model: **TB162W** **TB163W**	**24-006** RevDate: Page: 1

Pos	Part Number	Turkish	English	German	Qty	R/P	From	Up To	Original Number Supplier
*	62323-96010-66Y	KONVEKTÖR SETİ	CONVECTION HEATER SET		SET		020704		SAFKAR
1	62323-96040-01Y	KALORİFER BORUSU	PIPE HEATER		1		020704		
2	62323-96040-02Y	KALORİFER BORUSU	PIPE HEATER		2		020704		
3	62323-96010-22X	KONVEKTÖR	CONVECTION HEATER		1		020704		SAFKAR L:4150mm
4	62323-96010-23X	KONVEKTÖR	CONVECTION HEATER		1		020704		SAFKAR L:4150mm
5	62323-96010-24X	KONVEKTÖR	CONVECTION HEATER		1		020704		SAFKAR L:2950mm
6	62323-96010-25X	KONVEKTÖR	CONVECTION HEATER		1		020704		SAFKAR L:2150mm
7	62323-96010-26X	KONVEKTÖR	CONVECTION HEATER		1		020704		SAFKAR L:2150mm
8	62323-96010-08X	ARA KAPAK	COVER CENTER		2		1		SAFKAR L:290mm
9	TH166022Y	HORTUM d.20	HOSE		AR		1		
11	TU213419Y	HORTUM DİRSEK	HOSE ELBOW		6		020704		
19	62323-94010-16Y	KAPAK	COVER		5		1		
20	62323-97010-16Y	KAPAK	COVER		4		020704		

TEMSA	Kalorifer - 02.07.2004 e kadar Central heating - up to 2004' 07.02 Heizung	Group No : 24-007 Draw. Num. : x Rev. Date : Page : 1
	Vehicle Model: TB162W, TB163W,	

with toilet - for SAFKAR A/C

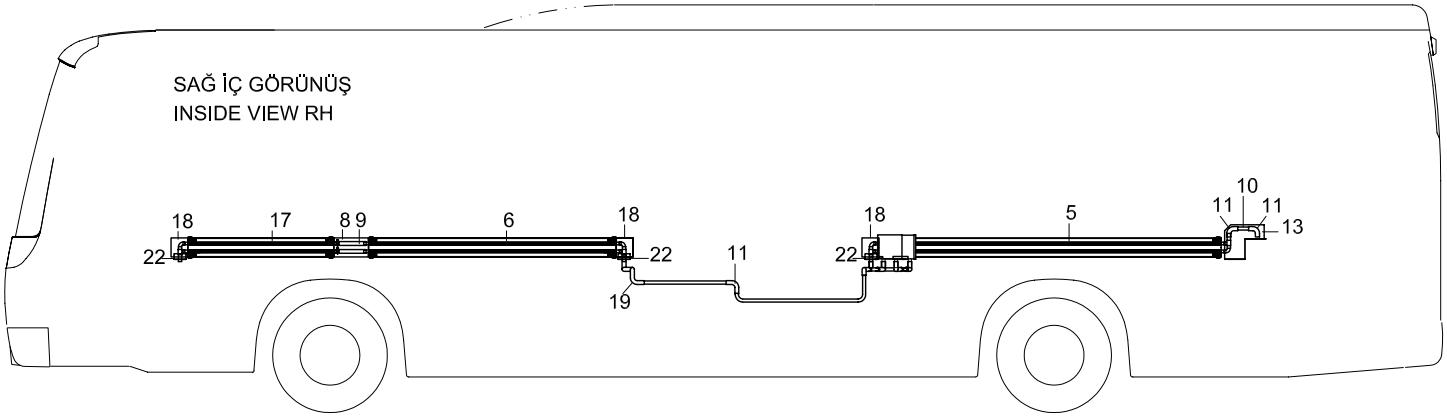

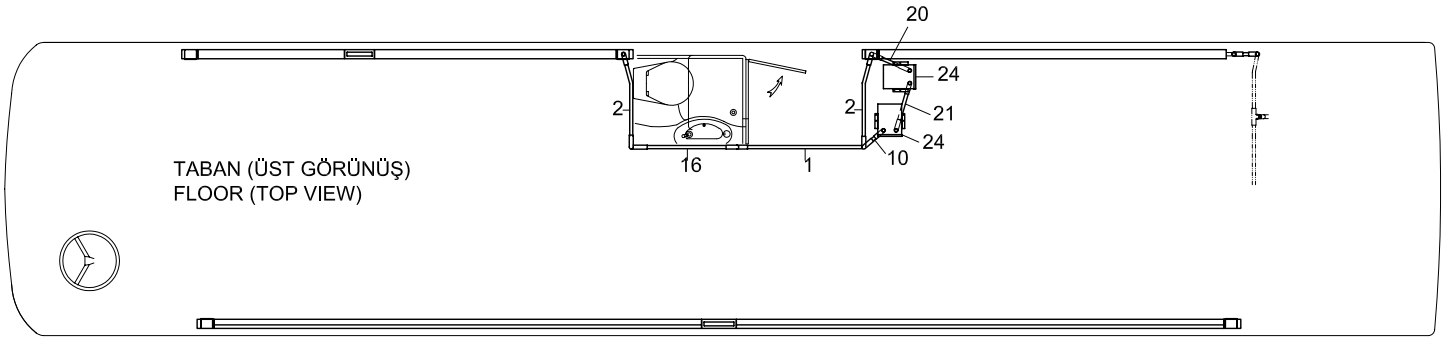

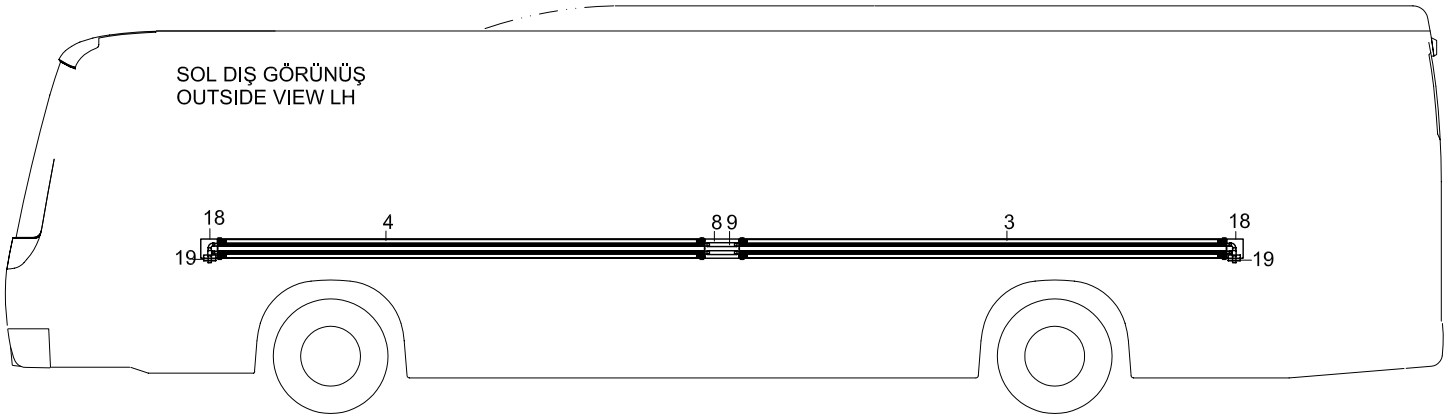

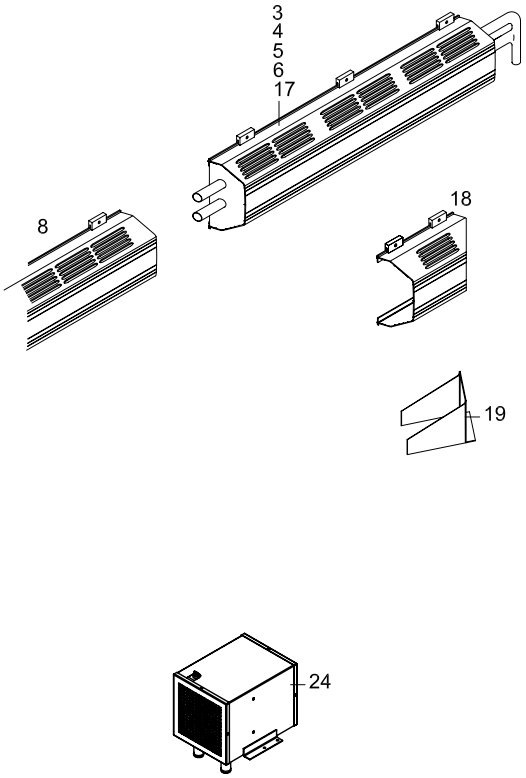

TEMSA	Kalorifer - tuvaletli - 02.07.2004 e kadar Central heating- with toilet - up to 2004'07.02 Heizung	Drw.no: 62323-96010-71 Vehicle Model: **TB162W** **TB163W**	**24-007** RevDate: Page: 1

Pos	Part Number	Turkish	English	German	Qty	R/P	From	Up To	Original Number Supplier
*	62323-96010-75Y	KONVEKTÖR SETİ	CONVECTION HEATER SET		SET		1	020704	SAFKAR
1	62323-96010-01Y	KALORİFER BORUSU	PIPE HEATER		1		1	020704	
2	62323-96010-02Y	KALORİFER BORUSU	PIPE HEATER		2		1	020704	
3	62323-96010-03X	KONVEKTÖR	CONVECTION HEATER		1		1	020704	SAFKAR L:4150mm
4	62323-96010-04X	KONVEKTÖR	CONVECTION HEATER		1		1	020704	SAFKAR L:4150mm
5	62323-96010-05X	KONVEKTÖR	CONVECTION HEATER		1		1	020704	SAFKAR L:2950mm
6	62323-96010-06X	KONVEKTÖR	CONVECTION HEATER		1		1	020704	SAFKAR L:2150mm
8	62323-96010-08X	ARA KAPAK	COVER CENTER		2		1		L:290mm
9	TH166022Y	HORTUM d.20	HOSE		AR		1		
10	62323-96010-10Y	KALORİFER BORUSU	PIPE HEATER		1		1		
11	TU213119Y	HORTUM DİRSEK	HOSE ELBOW		9		1		
13	62323-96010-14Y	ARKA UÇ KAPAK	COVER- REAR END		1		1		
16	62323-96010-16Y	BORU	PIPE		1		1		
17	62323-94010-48X	KONVEKTÖR	CONVECTION HEATER		1		1	020704	SAFKAR L:1300mm
18	62323-94010-10X	UÇ KAPAK	COVER END		5		1		SAFKAR L:140mm
19	TU213108Y	HORTUM DİRSEK	HOSE ELBOW		1		1		
20	62323-96010-20Y	BORU	PIPE		1		1		
21	62323-96010-21Y	BORU	PIPE		1		1		
22	62323-94010-16Y	KAPAK	COVER		5		1		
24	62323-94010-40Y	KALORİFER	HEATER		2		1		

TEMSA	Kalorifer - 02.07.2004 den sonra Central heating - after 2004' 07.02 Heizung	Group No : 24-008 Draw. Num. : x Rev. Date : Page : 1
	Vehicle Model: TB162W, TB163W,	

with toilet - for SAFKAR A/C

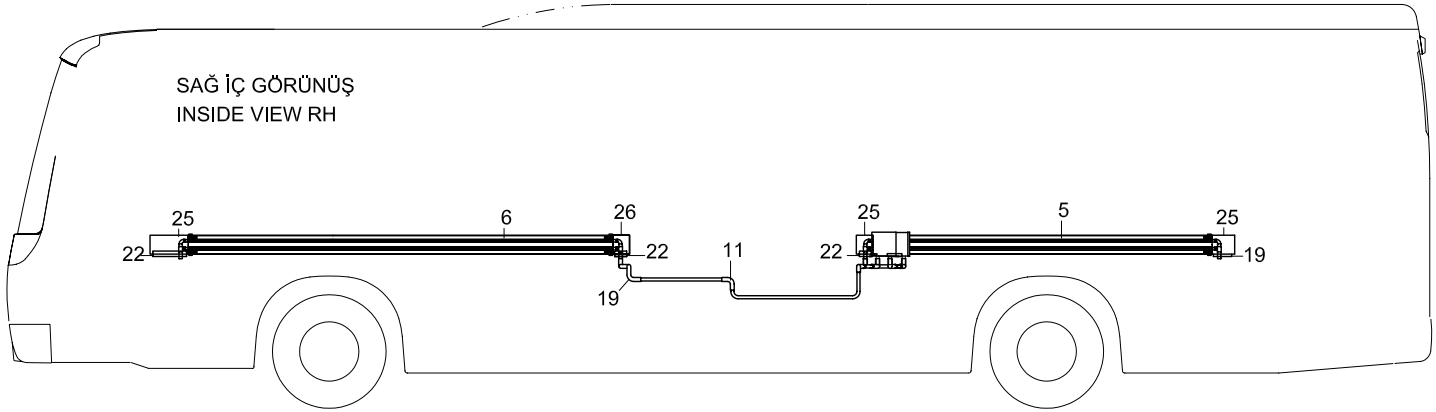

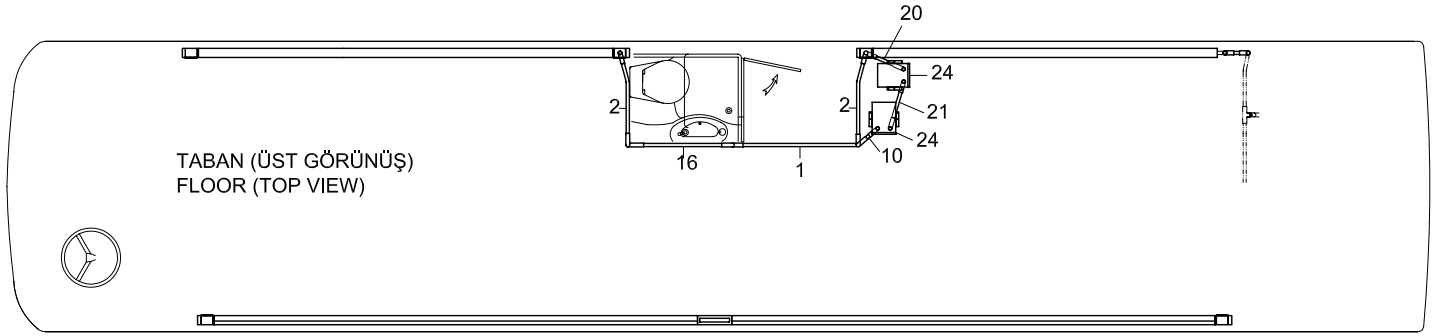

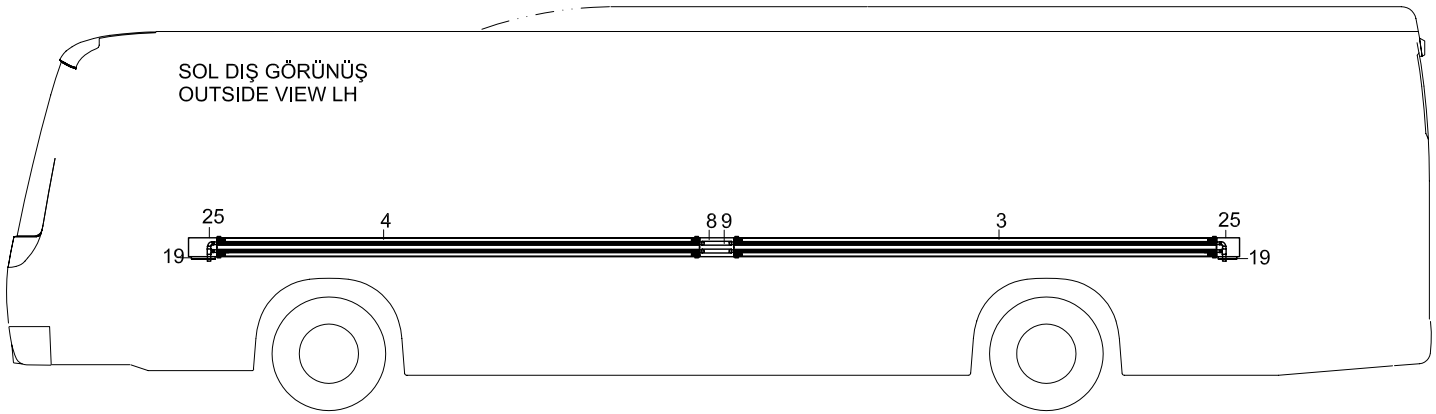

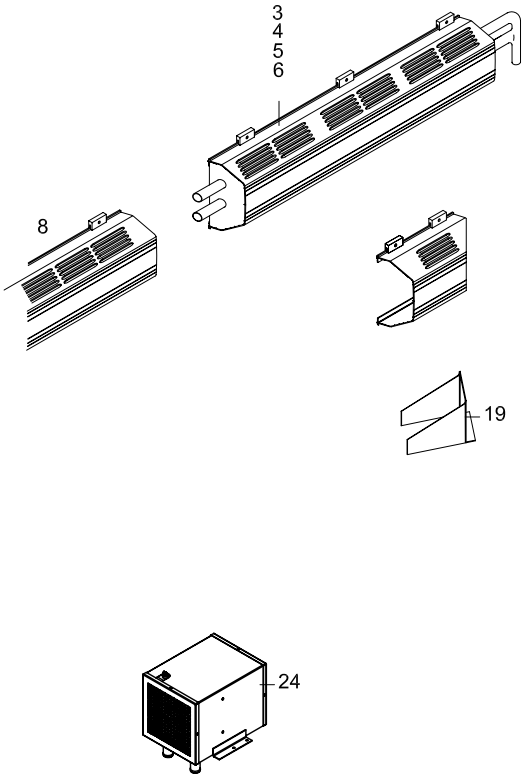

TEMSA	Kalorifer - tuvaletli - 02.07.2004 den sonra Central heating- with toilet- after 2004'07.02 Heizung	Drw.no: 62323-96010-71 Vehicle Model: **TB162W** **TB163W**	**24-008** RevDate: Page: 1

Pos	Part Number	Turkish	English	German	Qty	R/P	From	Up To	Original Number Supplier
*	62323-96010-76Y	KONVEKTÖR SETİ	CONVECTION HEATER SET		SET		1		SAFKAR
1	62323-96040-01Y	KALORİFER BORUSU	PIPE HEATER		1		020704		
2	62323-96040-02Y	KALORİFER BORUSU	PIPE HEATER		2		020704		
3	62323-96010-22X	KONVEKTÖR	CONVECTION HEATER		1		1		SAFKAR L:4150mm
4	62323-96010-23X	KONVEKTÖR	CONVECTION HEATER		1		1		SAFKAR L:4150mm
5	62323-96010-24X	KONVEKTÖR	CONVECTION HEATER		1		1		SAFKAR L:2950mm
6	62323-96010-28X	KONVEKTÖR	CONVECTION HEATER		1		1		SAFKAR L:3660mm
8	62323-96010-12X	ARA KAPAK	COVER CENTER		2		020704		L:290mm
9	TH166022Y	HORTUM d.20	HOSE		AR		1		
10	62323-96040-10Y	KALORİFER BORUSU	PIPE HEATER		1		020704		
11	TU213419Y	HORTUM DİRSEK	HOSE ELBOW		9		020704		
13	62323-96010-14Y	ARKA UÇ KAPAK	COVER- REAR END		1		1		
16	62323-96040-16Y	BORU	PIPE		1		020704		
19	TU213408Y	HORTUM DİRSEK	HOSE ELBOW		1		020704		
20	62323-96040-20Y	BORU	PIPE		1		020704		
21	62323-96040-21Y	BORU	PIPE		1		020704		
22	62323-96010-17Y	KAPAK	COVER		5		020704		
24	62323-94010-40Y	KALORİFER	HEATER		2		1		
25	62323-97010-16Y	UÇ KAPAK	COVER END		5		020704		SAFKAR L:140mm
26	62323-97010-14Y	UÇ KAPAK	COVER END		1		020704		

TEMSA	Kalorifer - Sütrak A/C Central heating Heizung	Group No : 24-009 Draw. Num. : x Rev. Date : Page : 1
	Vehicle Model: TB162W, TB163W,	

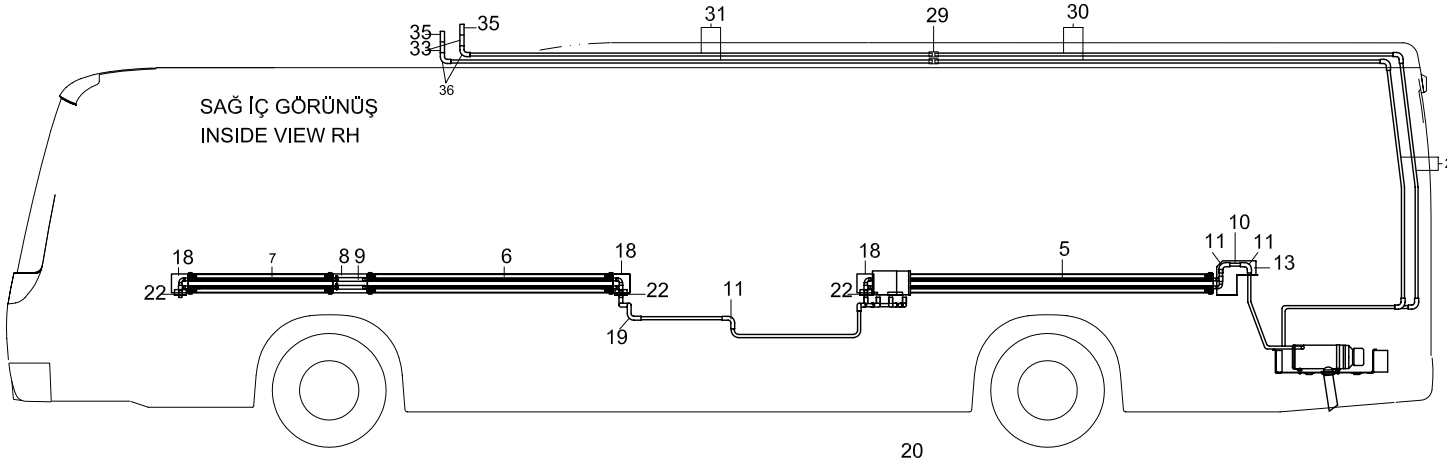

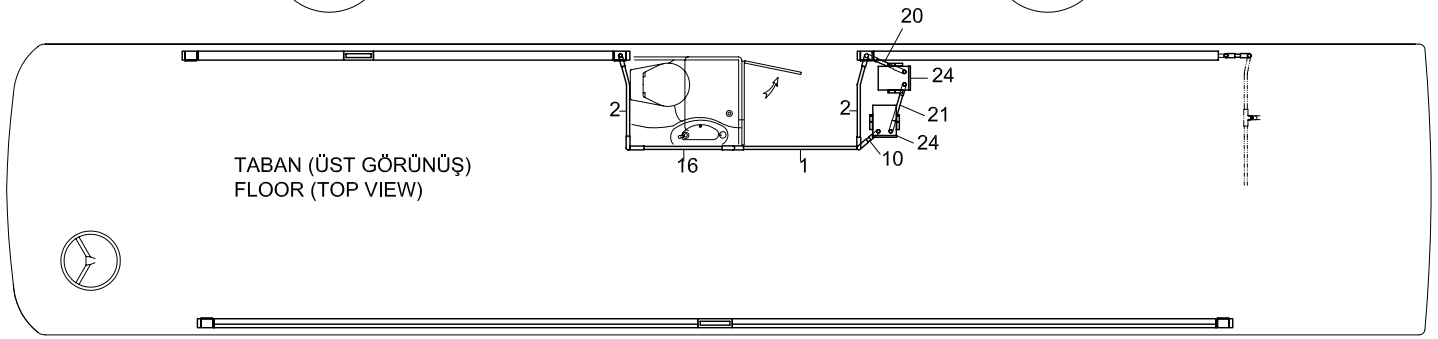

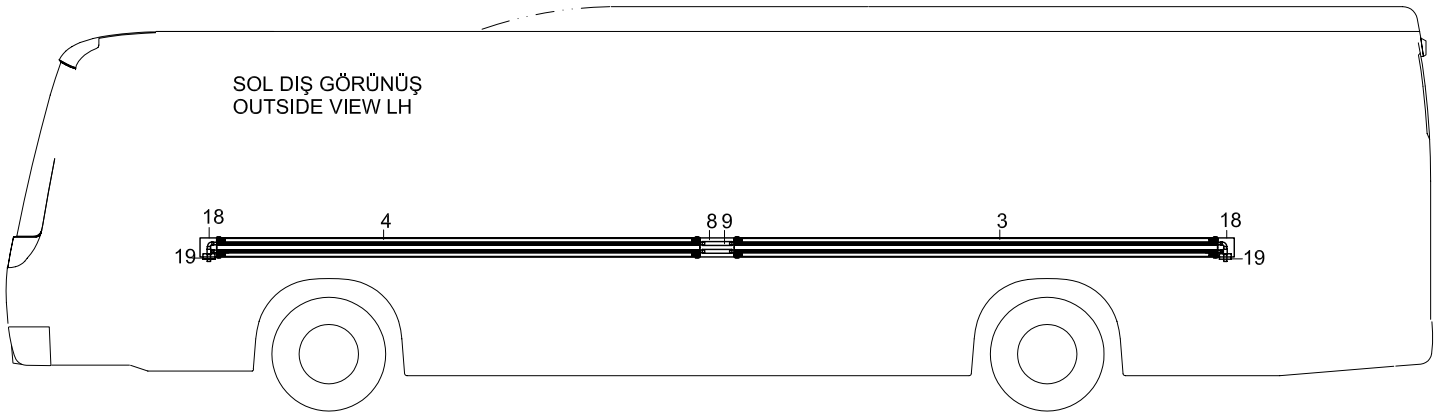

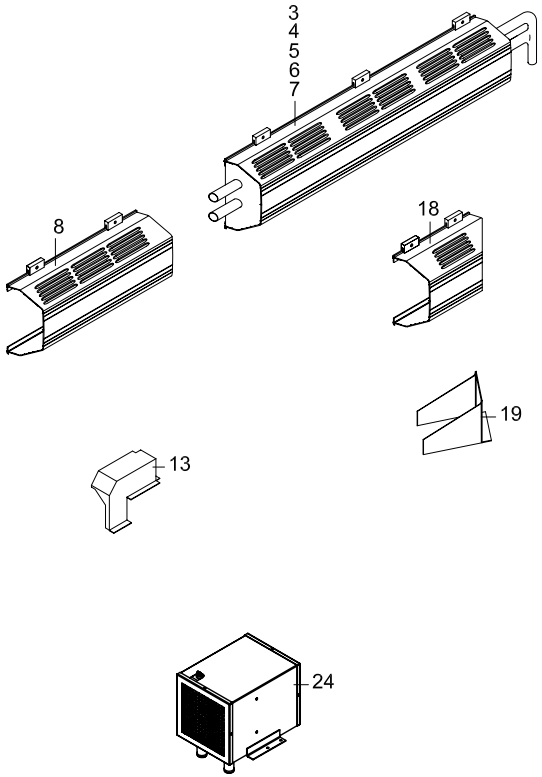

TEMSA	Kalorifer - Sütrak A/C Central heating- Sütrak A/C Heizung	Drw.no: 62323-96020-71Y Vehicle Model: **TB162W** **TB163W**	**24-009** RevDate: Page: 1

Pos	Part Number	Turkish	English	German	Qty	R/P	From	Up To	Original Number Supplier
*	62323-96010-75Y	KONVEKTÖR SETİ	CONVECTION HEATER SET		SET		1	020704	SAFKAR
*	62323-96010-76Y	KONVEKTÖR SETİ	CONVECTION HEATER SET		SET		020704		SAFKAR
1	62323-96010-01Y	KALORİFER BORUSU	PIPE HEATER		1		1	020704	
1	62323-96040-01Y	KALORİFER BORUSU	PIPE HEATER		1		020704		
2	62323-96010-02Y	KALORİFER BORUSU	PIPE HEATER		2		1	020704	
2	62323-96040-02Y	KALORİFER BORUSU	PIPE HEATER		2		020704		
3	62323-96010-03X	KONVEKTÖR	CONVECTION HEATER		1		1	020704	SAFKAR L:4150mm
3	62323-96010-22X	KONVEKTÖR	CONVECTION HEATER		1		020704		SAFKAR L:4150mm
4	62323-96010-04X	KONVEKTÖR	CONVECTION HEATER		1		1	020704	SAFKAR L:4150mm
4	62323-96010-23X	KONVEKTÖR	CONVECTION HEATER		1		020704		SAFKAR L:4150mm
5	62323-96010-05X	KONVEKTÖR	CONVECTION HEATER		1		1	020704	SAFKAR L:2950mm
5	62323-96010-24X	KONVEKTÖR	CONVECTION HEATER		1		020704		SAFKAR L:2950mm
6	62323-96010-06X	KONVEKTÖR	CONVECTION HEATER		1		1	020704	SAFKAR L:2150mm
6	62323-96010-25X	KONVEKTÖR	CONVECTION HEATER		1		020704		SAFKAR L:2150mm
8	62323-96010-08X	ARA KAPAK	COVER CENTER		2		1	020704	L:290mm
8	62323-96010-12X	ARA KAPAK	COVER CENTER		2		020704		L:290mm
9	TH166022Y	HORTUM d.20	HOSE		AR		1		
10	62323-96010-10Y	KALORİFER BORUSU	PIPE HEATER		1		1	020704	
10	62323-96040-10Y	KALORİFER BORUSU	PIPE HEATER		1		020704		
11	TU213119Y	HORTUM DİRSEK	HOSE ELBOW		9		1	020704	
11	TU213419Y	HORTUM DİRSEK	HOSE ELBOW		9		020704		
13	62323-96010-14Y	ARKA UÇ KAPAK	COVER- REAR END		1		1		
16	62323-96010-16Y	BORU	PIPE		1		1	020704	
16	62323-96040-16Y	BORU	PIPE		1		020704		
17	62323-94010-48X	KONVEKTÖR	CONVECTION HEATER		1		1	020704	SAFKAR L:1300mm
17	62323-94010-26X	KONVEKTÖR	CONVECTION HEATER		1		020704		SAFKAR L:1300mm
18	62323-94010-10X	UÇ KAPAK	COVER END		5		1		SAFKAR L:140mm
19	TU213108Y	HORTUM DİRSEK	HOSE ELBOW		1		1	020704	
19	TU213408Y	HORTUM DİRSEK	HOSE ELBOW		1		020704		
20	62323-96010-20Y	BORU	PIPE		1		1	020704	
20	62323-96040-20Y	BORU	PIPE		1		020704		
21	62323-96010-21Y	BORU	PIPE		1		1	020704	
21	62323-96040-21Y	BORU	PIPE		1		020704		
22	62323-94010-16Y	KAPAK	COVER		5		1		
28	62323-96020-02Y	BORU	PIPE		2		1	020704	

TEMSA	Kalorifer - Sütrak A/C Central heating- Sütrak A/C Heizung	Drw.no: 62323-96020-71Y Vehicle Model: **TB162W** **TB163W**	**24-009** RevDate: Page: 2

Pos	Part Number	Turkish	English	German	Qty	R/P	From	Up To	Original Number Supplier
28	62323-96050-02Y	BORU	PIPE		2		020704		
29	72323-00121-20Y	BORU SOKETİ	SOCKET STRAIGHT		2		1		
30	62323-96020-03Y	BORU	PIPE		2		1	020704	
30	62323-96050-03Y	BORU	PIPE		2		020704		
31	62323-96020-04Y	BORU	PIPE		2		1	020704	
31	62323-96050-04Y	BORU	PIPE		2		020704		
33	62323-96020-05Y	BORU	PIPE		2		1	020704	L:140mm
33	62323-96050-05Y	BORU	PIPE		2		020704		L:140mm
35	TO211119Y	ADAPTÖR	SLEEVE		2		1		
36	62323-96020-06Y	L-BORU	PIPE-L		2		1	020704	
36	62323-96050-06Y	L-BORU	PIPE-L		2		020704		

TEMSA	Kalorifer - 02.07.2004 e kadar Central heating - up to 2004' 07.02 Heizung	Group No : 24-010 Draw. Num. : x Rev. Date : Page : 1
	Vehicle Model: TB162Z, TB163Z,	

Standart - for SAFKAR A/C

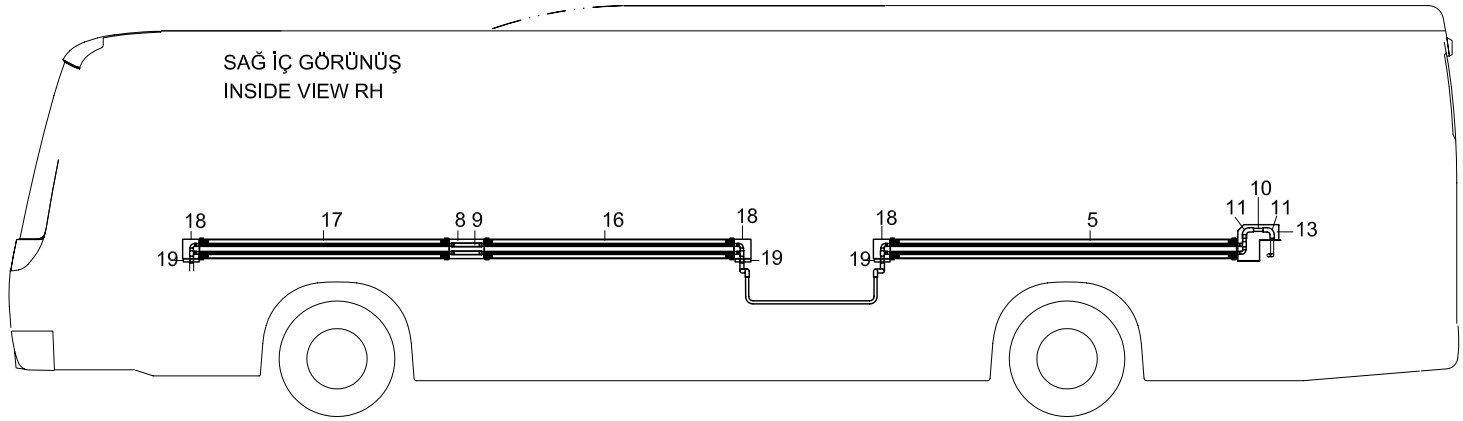

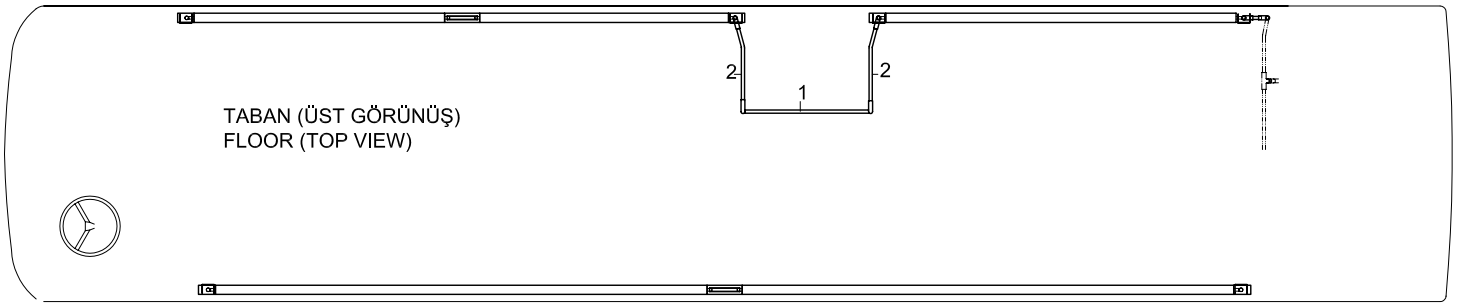

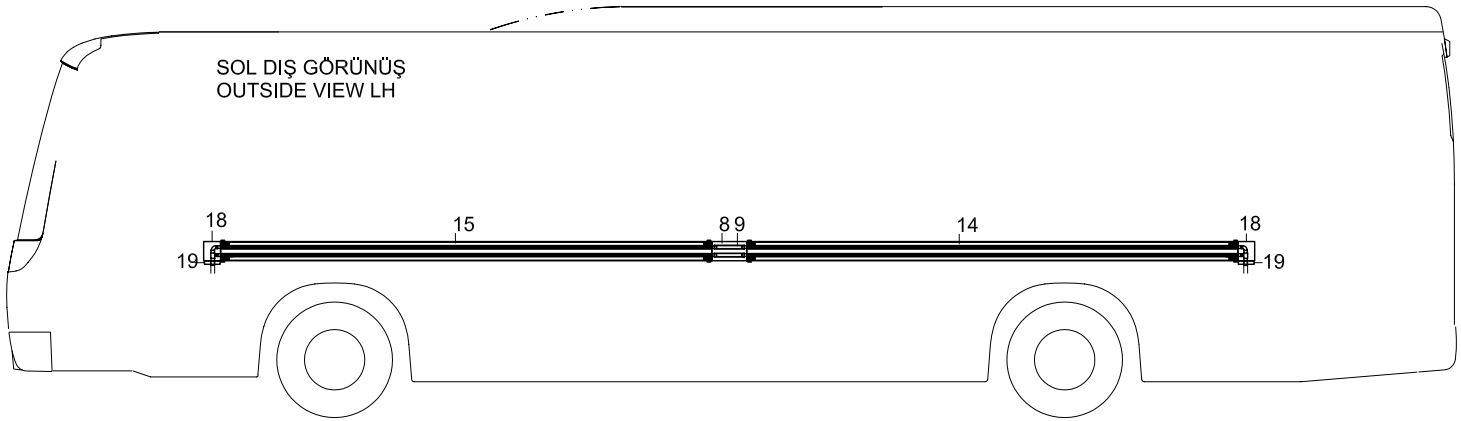

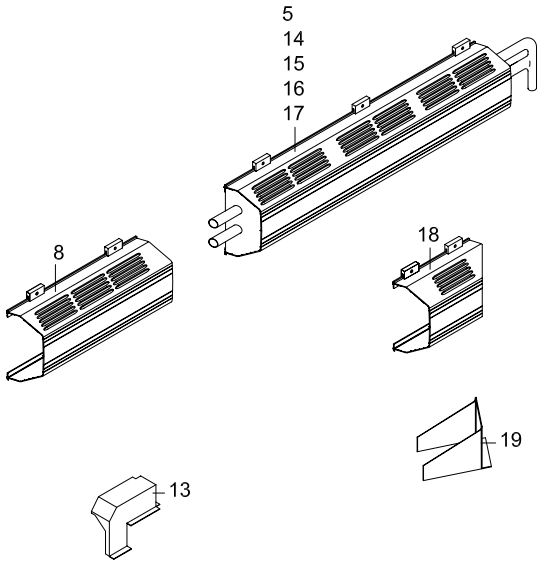

TEMSA	Kalorifer - 02.07.2004 e kadar Central heating - up to 2004'07.02 Heizung	Drw.no: 62323-97010-70Y Vehicle Model: **TB162Z** **TB163Z**	**24-010** RevDate: Page: 1

Pos	Part Number	Turkish	English	German	Qty	R/P	From	Up To	Original Number Supplier
*	62323-97010-65Y	KONVEKTÖR SETİ	CONVECTION HEATER SET		SET		1	020704	SAFKAR
1	62323-96010-01Y	KALORİFER BORUSU	PIPE HEATER		1		1	020704	
2	62323-96010-02Y	KALORİFER BORUSU	PIPE HEATER		2		1	020704	
5	62323-96010-05X	KONVEKTÖR	CONVECTION HEATER		1		1	020704	SAFKAR L:2950mm
8	62323-96010-08X	ARA KAPAK	COVER CENTER		2		1		L:290mm
9	TH166022	HORTUM	HOSE		AR		1		
10	62323-96010-10Y	KALORİFER BORUSU	PIPE HEATER		1		1	020704	SAFKAR L:2150mm
11	TU213119Y	HORTUM DİRSEK	HOSE ELBOW		6		1	020704	
13	62323-96010-14Y	ARKA UÇ KAPAK	COVER- REAR END		1		1	020704	L:290mm
14	62323-97010-01X	KONVEKTÖR	CONVECTION HEATER		1		1	020704	SAFKAR L:4550mm
15	62323-97010-02X	KONVEKTÖR	CONVECTION HEATER		1		1	020704	SAFKAR L:4550mm
16	62323-97010-03X	KONVEKTÖR	CONVECTION HEATER		1		1	020704	SAFKAR L:2550mm
17	62323-97010-04X	KONVEKTÖR	CONVECTION HEATER		1		1	020704	SAFKAR L:2550mm
18	62323-94010-10X	UÇ KAPAK	COVER END		5		1	020704	SAFKAR L:140mm
19	62323-94010-16Y	KAPAK	COVER		5		1		

TEMSA	Kalorifer - 02.07.2004 den sonra Central heating - after 2004' 07.02 Heizung	Group No : 24-011 Draw. Num. : x Rev. Date : Page : 1
	Vehicle Model: TB162Z, TB163Z,	

Standart - for SAFKAR A/C

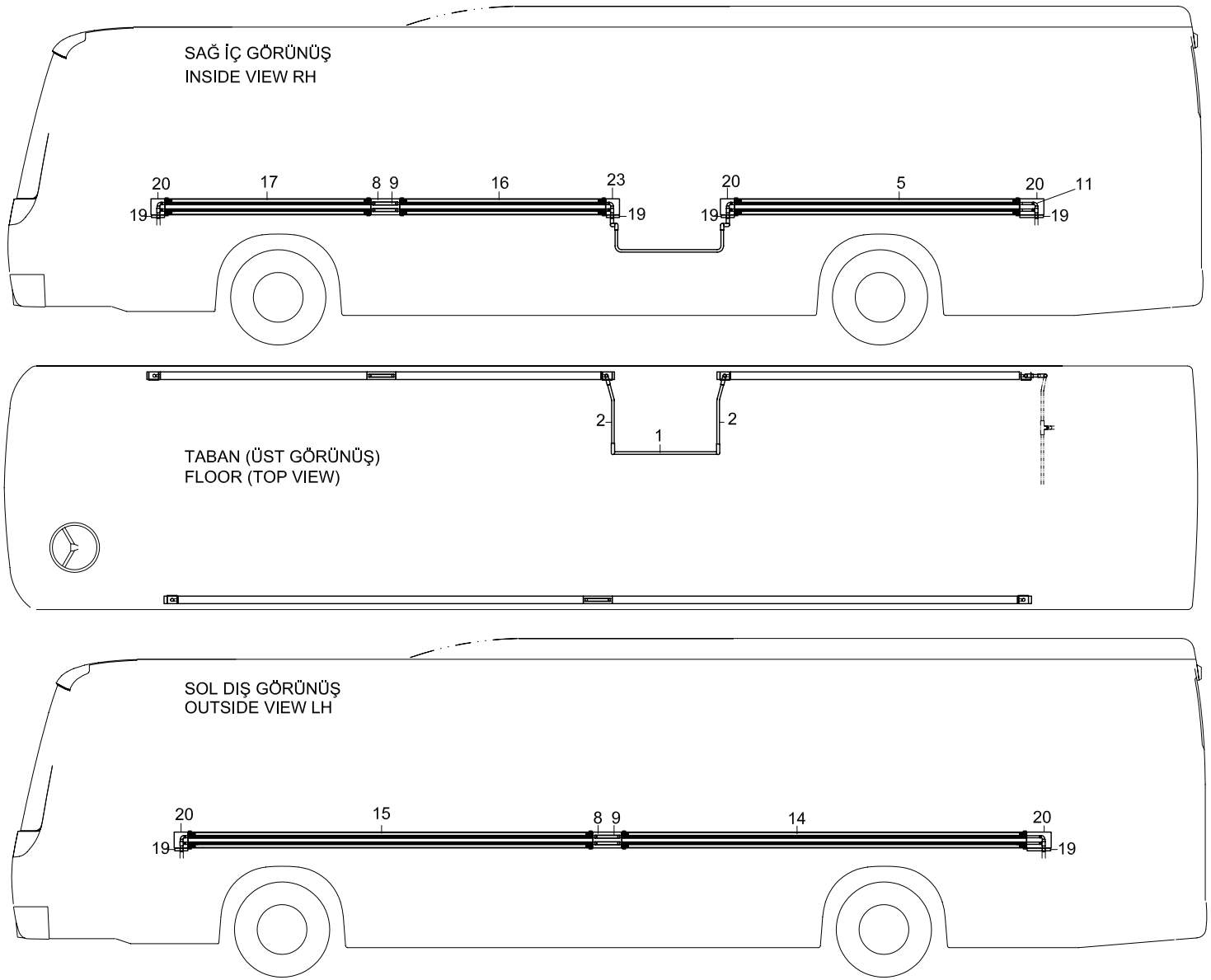

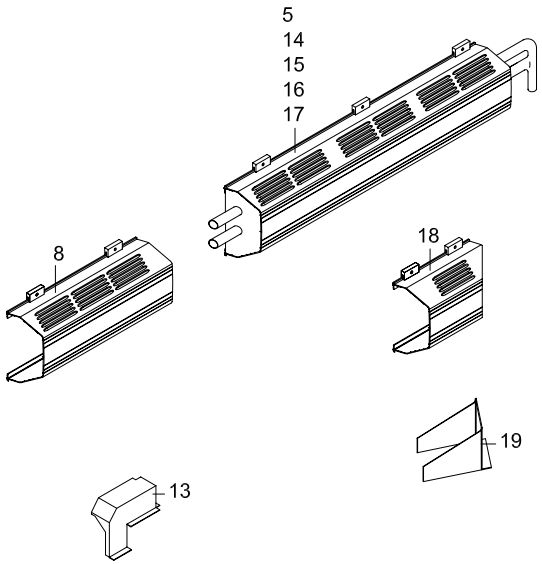

TEMSA	Kalorifer - 02.07.2004 den sonra Central heating - after 2004'07.02 Heizung	Drw.no: 62323-97010-70Y Vehicle Model: **TB162Z** **TB163Z**	**24-011** RevDate: Page: 1

Pos	Part Number	Turkish	English	German	Qty	R/P	From	Up To	Original Number Supplier
*	62323-97010-66Y	KONVEKTÖR SETİ	CONVECTION HEATER SET		SET		020704		SAFKAR
1	62323-96040-01Y	KALORİFER BORUSU	PIPE HEATER		1		020704		
2	62323-96040-02Y	KALORİFER BORUSU	PIPE HEATER		2		020704		
5	62323-96010-24X	KONVEKTÖR	CONVECTION HEATER		1		020704		SAFKAR L:2950mm
8	62323-96010-12X	ARA KAPAK	COVER CENTER		2		020704		L:290mm
9	TH166022Y	HORTUM	HOSE		AR		1		
11	TU213419Y	HORTUM DİRSEK	HOSE ELBOW		6		020704		
14	62323-97010-040X	KONVEKTÖR	CONVECTION HEATER		1		020704		SAFKAR L:4550mm
15	62323-97010-41X	KONVEKTÖR	CONVECTION HEATER		1		020704		SAFKAR L:4550mm
16	62323-97010-42X	KONVEKTÖR	CONVECTION HEATER		1		020704		SAFKAR L:2550mm
17	62323-97010-43X	KONVEKTÖR	CONVECTION HEATER		1		020704		SAFKAR L:2550mm
19	62323-94010-16Y	KAPAK	COVER		5		1		
20	62323-97010-16Y	UÇ KAPAK	COVER END		5		020704		SAFKAR L:140mm
23	62323-97010-14Y	UÇ KAPAK	COVER END		1		020704		

TEMSA	Kalorifer - 02.07.2004 e kadar Central heating - up to 2004' 07.02 Heizung	Group No : 24-012 Draw. Num. : x Rev. Date : Page : 1
	Vehicle Model: TB162Z, TB163Z,	

with toilet - for SAFKAR A/C

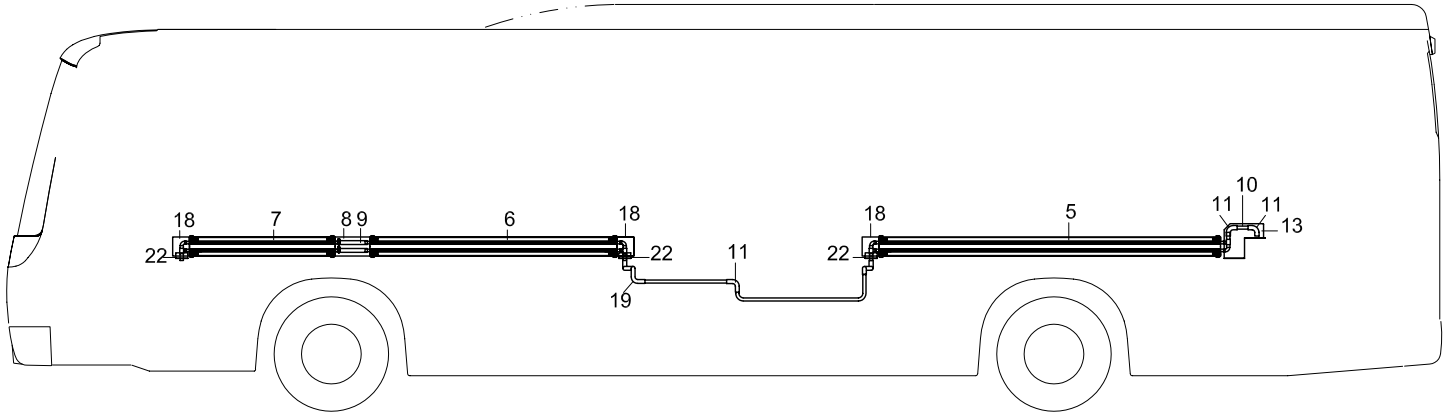

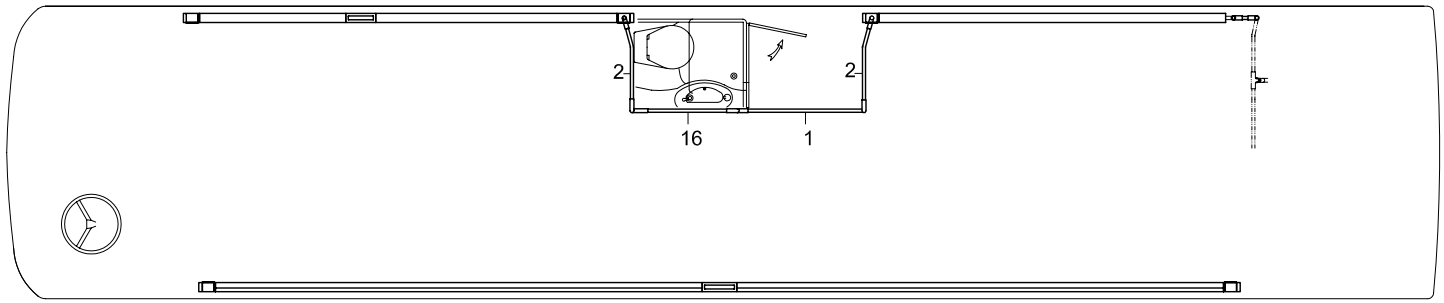

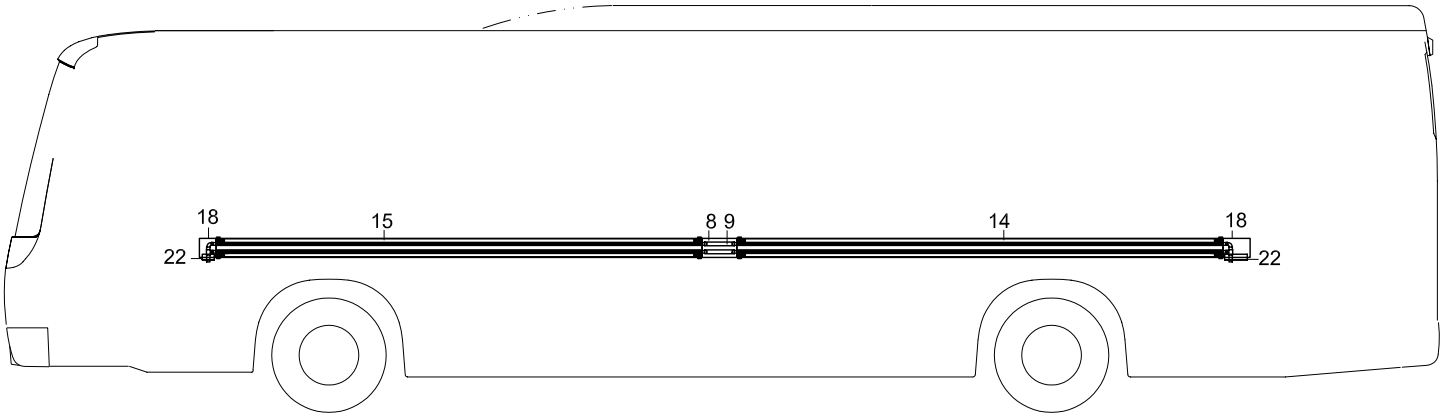

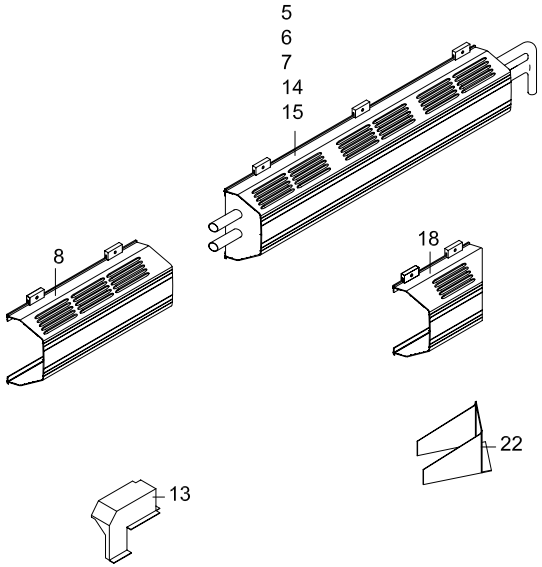

TEMSA	Kalorifer - tuvaletli - 02.07.2004 e kadar Central heating- with toilet - up to 2004'07.02 Heizung	Drw.no: 62323-97010-70Y Vehicle Model: **TB162Z** **TB163Z**	**24-012** RevDate: Page: 1

Pos	Part Number	Turkish	English	German	Qty	R/P	From	Up To	Original Number Supplier
*	62323-97010-75Y	KONVEKTÖR SETİ	CONVECTION HEATER SET		SET		1	020704	SAFKAR
1	62323-96010-01Y	KALORİFER BORUSU	PIPE HEATER		1		1	020704	72325-00130-03
2	62323-96010-02Y	KALORİFER BORUSU	PIPE HEATER		2		1	020704	72325-00130-03
5	62323-96010-05X	KONVEKTÖR	CONVECTION HEATER		1		1	020704	SAFKAR L:2950mm
6	62323-96010-06X	KONVEKTÖR	CONVECTION HEATER		1		1	020704	SAFKAR L:2150mm
7	62323-96010-07X	KONVEKTÖR	CONVECTION HEATER		1		1	020704	SAFKAR L:2150mm
8	62323-96010-08X	ARA KAPAK	COVER CENTER		2		1	020704	SAFKAR L:290mm
9	TH166022Y	HORTUM	HOSE		AR		1		
10	62323-96010-10Y	KALORİFER BORUSU	PIPE HEATER		1		1		72325-00130-03
11	TU213119Y	HORTUM DİRSEK	HOSE ELBOW		6		1		
13	62323-96010-14Y	ARKA UÇ KAPAK	COVER- REAR END		1		1		
14	62323-97010-01X	KONVEKTÖR	CONVECTION HEATER		1		1	020704	SAFKAR L:4550mm
15	62323-97010-02X	KONVEKTÖR	CONVECTION HEATER		1		1	020704	SAFKAR L:4550mm
16	62323-96010-16Y	BORU	PIPE		1		1		
18	62323-94010-10X	UÇ KAPAK	COVER END		5		1		
19	TU213108Y	HORTUM DİRSEK	HOSE ELBOW		1		1		
22	62323-94010-16Y	KAPAK	COVER		5		1		

TEMSA	Kalorifer - 02.07.2004 den sonra Central heating - after 2004' 07.02 Heizung	Group No : 24-013 Draw. Num. : x Rev. Date : Page : 1
	Vehicle Model: TB162Z, TB163Z,	

with toilet - for SAFKAR A/C

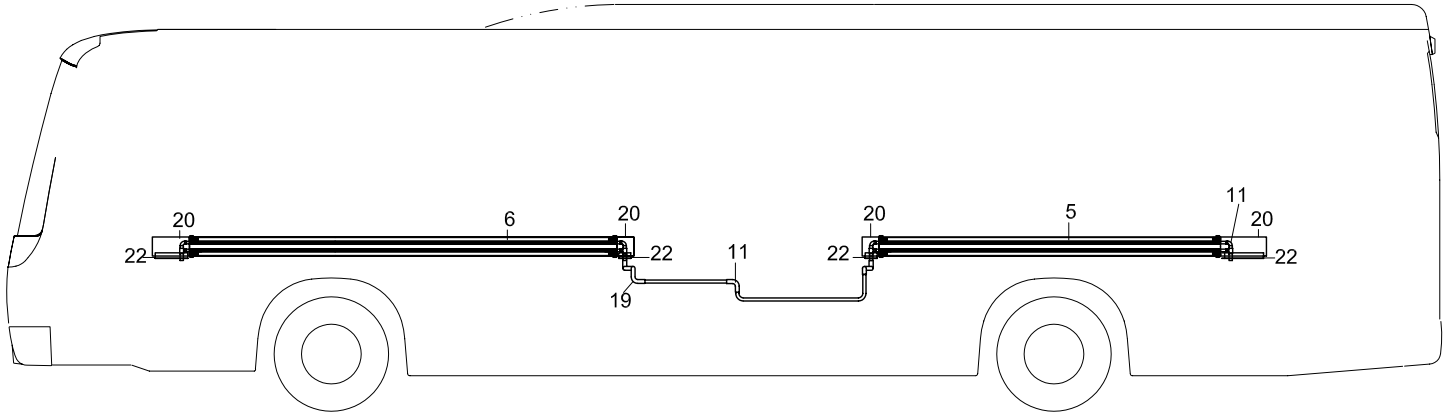

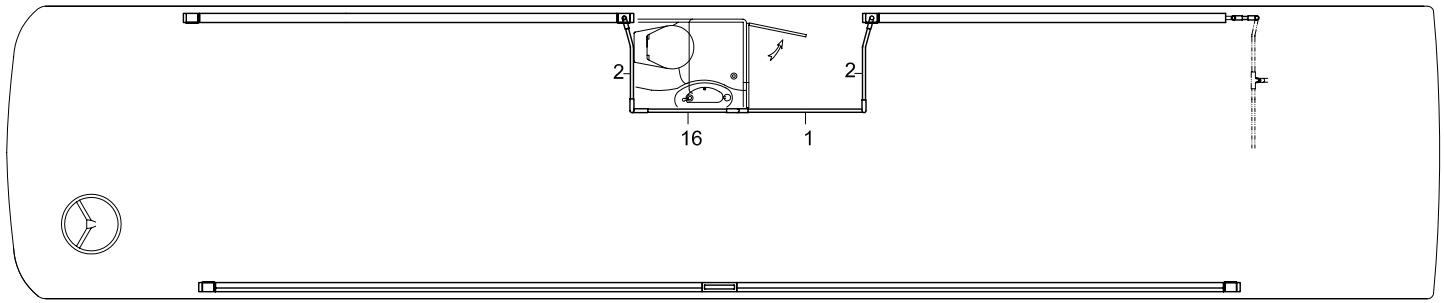

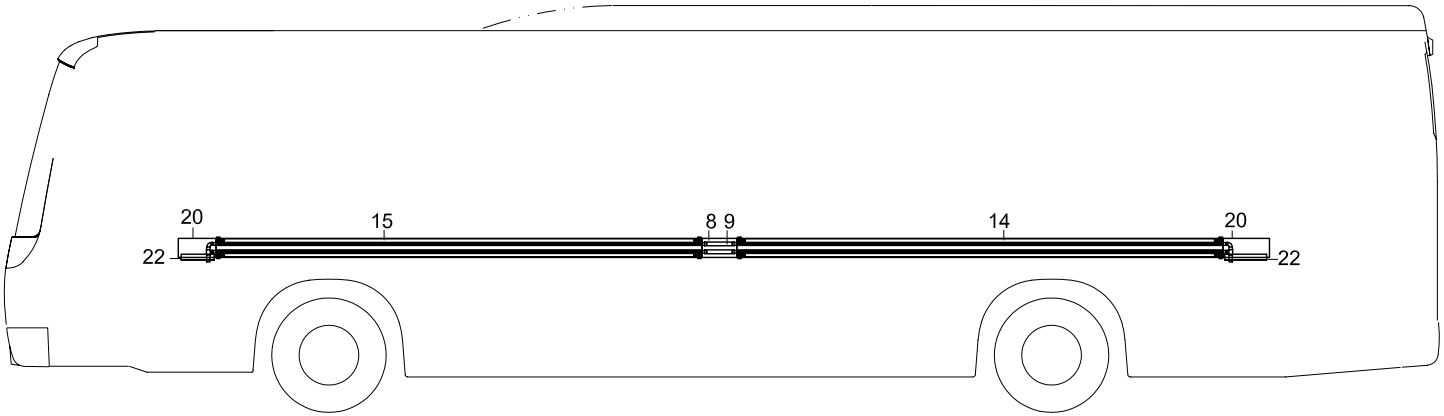

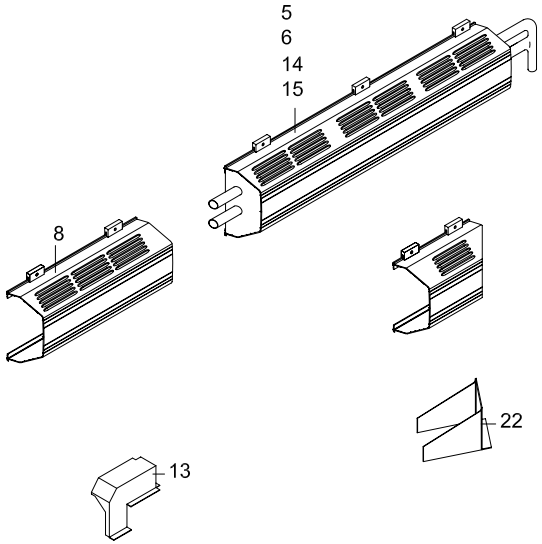

TEMSA	Kalorifer - tuvaletli - 02.07.2004 den sonra Central heating- with toilet- after 2004'07.02 Heizung	Drw.no: 62323-97010-71Y Vehicle Model: **TB162Z** **TB163Z**	**24-013** RevDate: Page: 1

Pos	Part Number	Turkish	English	German	Qty	R/P	From	Up To	Original Number Supplier
*	62323-97010-76Y	KONVEKTÖR SETİ	CONVECTION HEATER SET		SET		020704		SAFKAR
1	62323-96040-01Y	KALORİFER BORUSU	PIPE HEATER		1		020704		72325-00130-03
2	62323-96040-02Y	KALORİFER BORUSU	PIPE HEATER		2		020704		72325-00130-03
5	62323-96010-24X	KONVEKTÖR	CONVECTION HEATER		1		020704		SAFKAR L:2950mm
6	62323-97010-27X	KONVEKTÖR	CONVECTION HEATER		1		020704		SAFKAR L:4510mm
8	62323-96010-12X	ARA KAPAK	COVER CENTER		2		020704		SAFKAR L:290mm
9	TH166022Y	HORTUM	HOSE		AR		1		
11	TU213419Y	HORTUM DİRSEK	HOSE ELBOW		6		020704		
14	62323-97010-40X	KONVEKTÖR	CONVECTION HEATER		1		020704		SAFKAR L:4550mm
15	62323-97010-41X	KONVEKTÖR	CONVECTION HEATER		1		020704		SAFKAR L:4550mm
16	62323-96040-16Y	BORU	PIPE		1		020704		
19	TU213408Y	HORTUM DİRSEK	HOSE ELBOW		1		020704		
20	62323-97010-16Y	UÇ KAPAK	COVER END		5		020704		SAFKAR L:140mm
23	62323-97010-14Y	UÇ KAPAK	COVER END		1		020704		

TEMSA	Kalorifer Central heating Heizung	Group No : 24-014 Draw. Num. : x Rev. Date : Page : 1
	Vehicle Model: TB162X, TB163X,	

Standart - for SAFKAR A/C

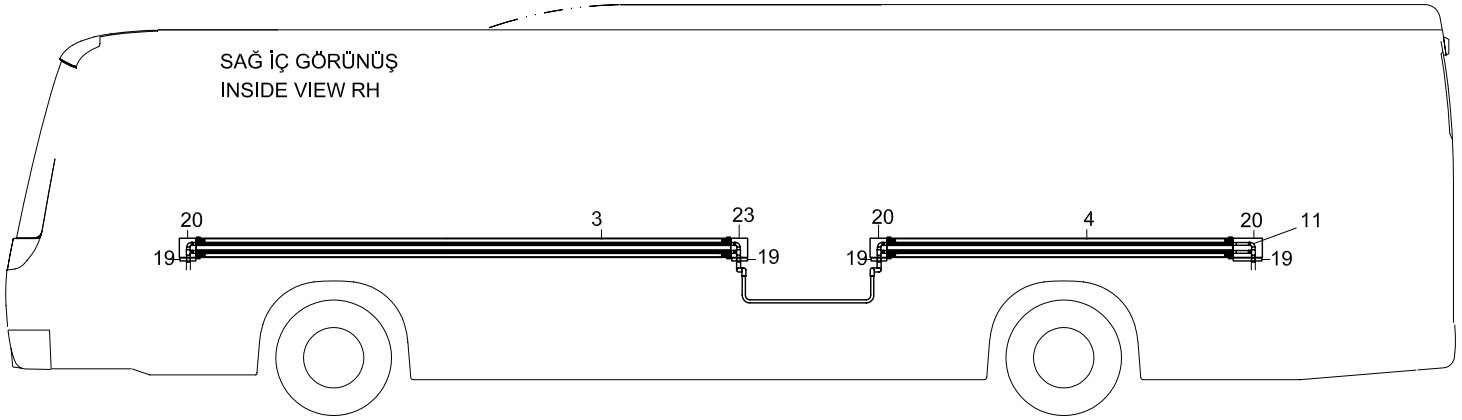

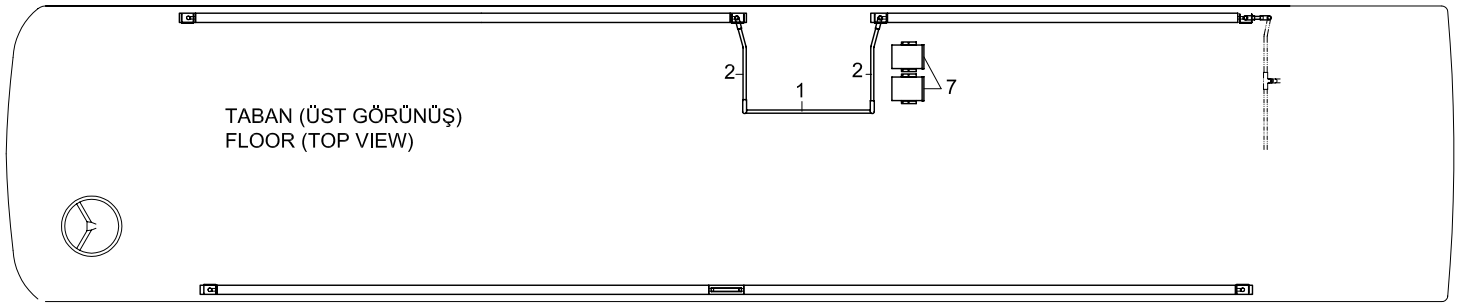

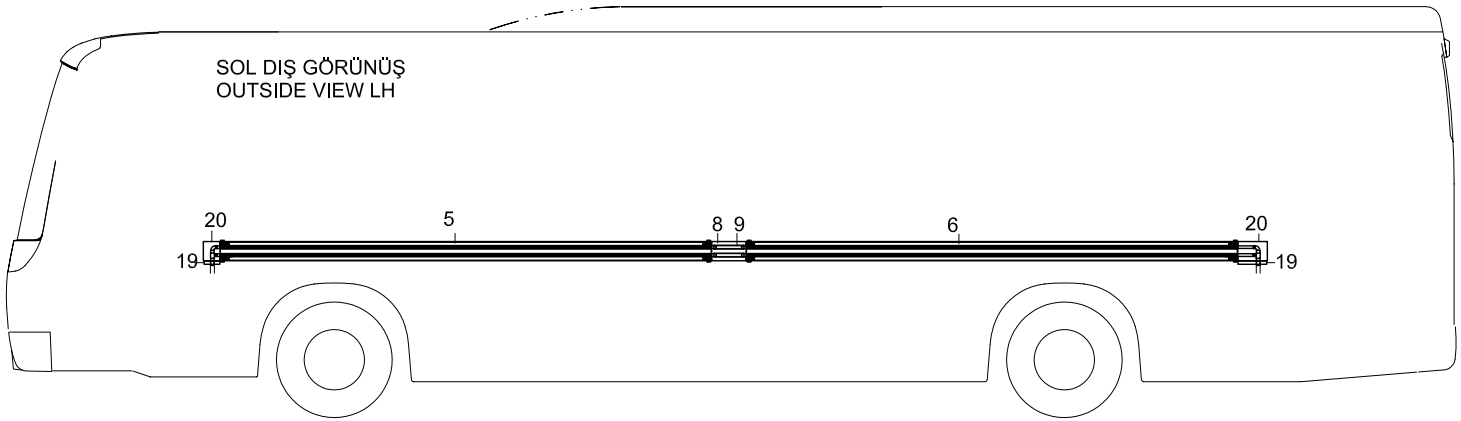

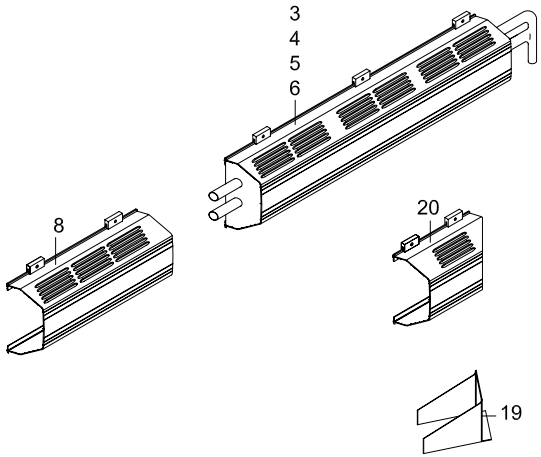

TEMSA	Kalorifer Central heating Heizung	Drw.no: 62323-98010-70Y Vehicle Model: **TB162X** **TB163X**	**24-014** RevDate: Page: 1

Pos	Part Number	Turkish	English	German	Qty	R/P	From	Up To	Original Number Supplier
*	62323-98010-66Y	KONVEKTÖR SETİ	CONVECTION HEATER SET		SET		1		SAFKAR
1	62323-96040-01Y	KALORİFER BORUSU	PIPE HEATER		1		1		
2	62323-96040-02Y	KALORİFER BORUSU	PIPE HEATER		2		1		
3	62323-96010-22X	KONVEKTÖR	CONVECTION HEATER		1		1		SAFKAR L:4150mm
4	62323-96010-23X	KONVEKTÖR	CONVECTION HEATER		1		1		SAFKAR L:4150mm
5	62323-98010-07X	KONVEKTÖR	CONVECTION HEATER		1		1		SAFKAR L:3445mm
6	62323-96010-08X	KONVEKTÖR	CONVECTION HEATER		1		1		SAFKAR L:3545mm
7	62323-94010-40Y	KALORİFER	HEATER		2		1		
8	62323-96010-12X	ARA KAPAK	COVER CENTER		2		1		L:290mm
9	TH166022Y	HORTUM	HOSE		AR		1		
11	TU213419Y	HORTUM DİRSEK	HOSE ELBOW		6		1		
19	62323-94010-16Y	KAPAK	COVER		5		1		
20	62323-97010-16Y	UÇ KAPAK	COVER END		5		1		SAFKAR L:140mm
23	62323-97010-14Y	UÇ KAPAK	COVER END		1		1		

TEMSA	Kalorifer Central heating Heizung	Group No : 24-015 Draw. Num. : x Rev. Date : Page : 1
	Vehicle Model: TB162Y, TB163Y	

Standart - for SAFKAR A/C

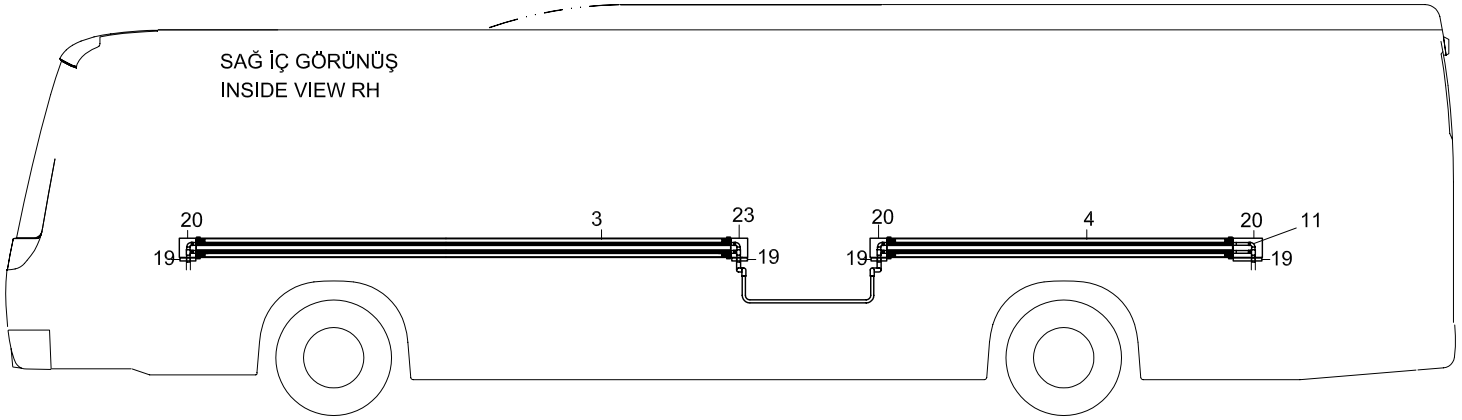

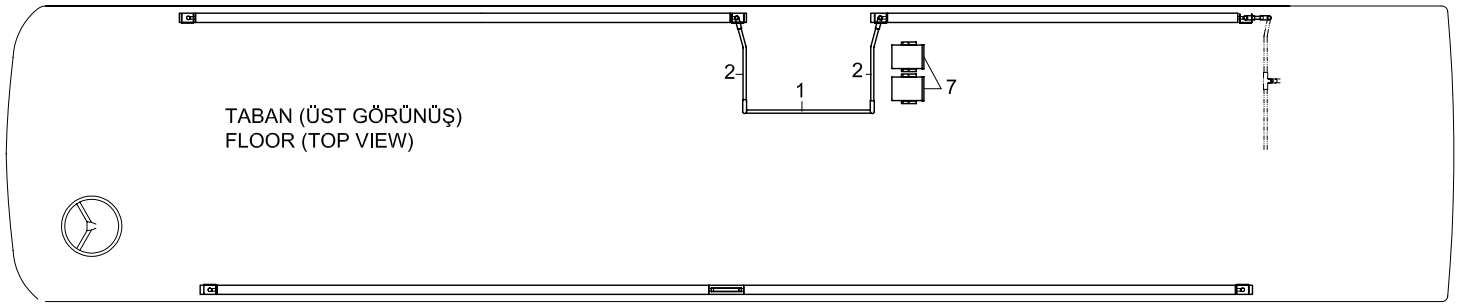

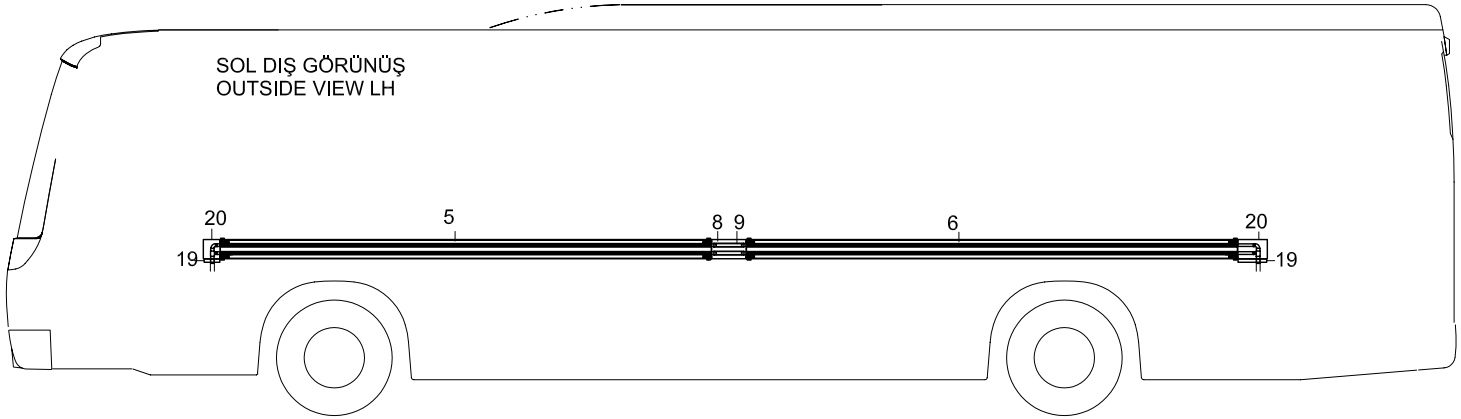

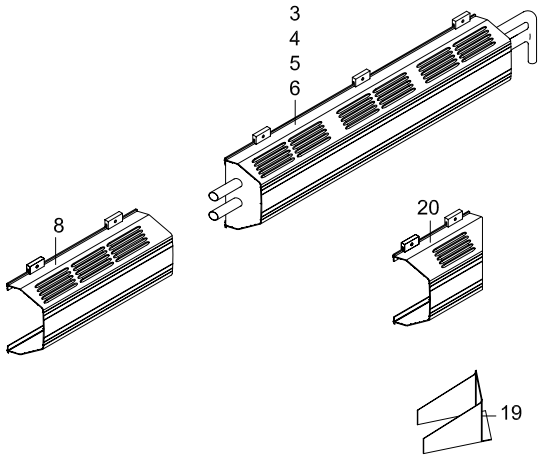

TEMSA	Kalorifer Central heating Heizung	Drw.no: 62323-99010-70Y Vehicle Model: **TB162Y** **TB163Y**	**24-015** RevDate: Page: 1

Pos	Part Number	Turkish	English	German	Qty	R/P	From	Up To	Original Number Supplier
*	62323-99010-66Y	KONVEKTÖR SETİ	CONVECTION HEATER SET		SET		1		SAFKAR
1	62323-96040-01Y	KALORİFER BORUSU	PIPE HEATER		1		1		
2	62323-96040-02Y	KALORİFER BORUSU	PIPE HEATER		2		1		
3	62323-97010-40X	KONVEKTÖR	CONVECTION HEATER		1		1		SAFKAR L:4550mm
4	62323-97010-41X	KONVEKTÖR	CONVECTION HEATER		1		1		SAFKAR L:4550mm
5	62323-98010-07X	KONVEKTÖR	CONVECTION HEATER		1		1		SAFKAR L:3445mm
6	62323-99010-03X	KONVEKTÖR	CONVECTION HEATER		1		1		SAFKAR L:4345mm
7	62323-94010-40Y	KALORİFER	HEATER		2		1		
8	62323-96010-12X	ARA KAPAK	COVER CENTER		2		1		L:290mm
9	TH166022Y	HORTUM	HOSE		AR		1		
11	TU213419Y	HORTUM DİRSEK	HOSE ELBOW		6		1		
19	62323-94010-16Y	KAPAK	COVER		5		1		
20	62323-97010-16Y	UÇ KAPAK	COVER END		5		1		SAFKAR L:140mm
23	62323-97010-14Y	UÇ KAPAK	COVER END		1		1		

TEMSA

Sıcak su boruları - 02.07.2004 e kadar
Heater Piping - up to 2004'07.02
Warmwasser Rohre

Vehicle Model: TB162W, TB162X, TB163W, TB163X,

Group No : 24-020
Draw. Num. :
x
Rev. Date :
Page : 1

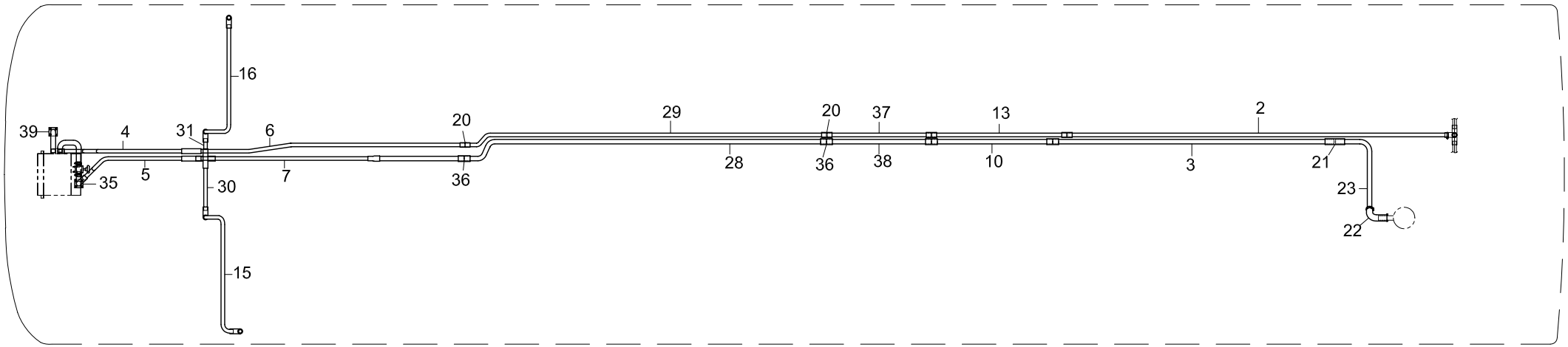

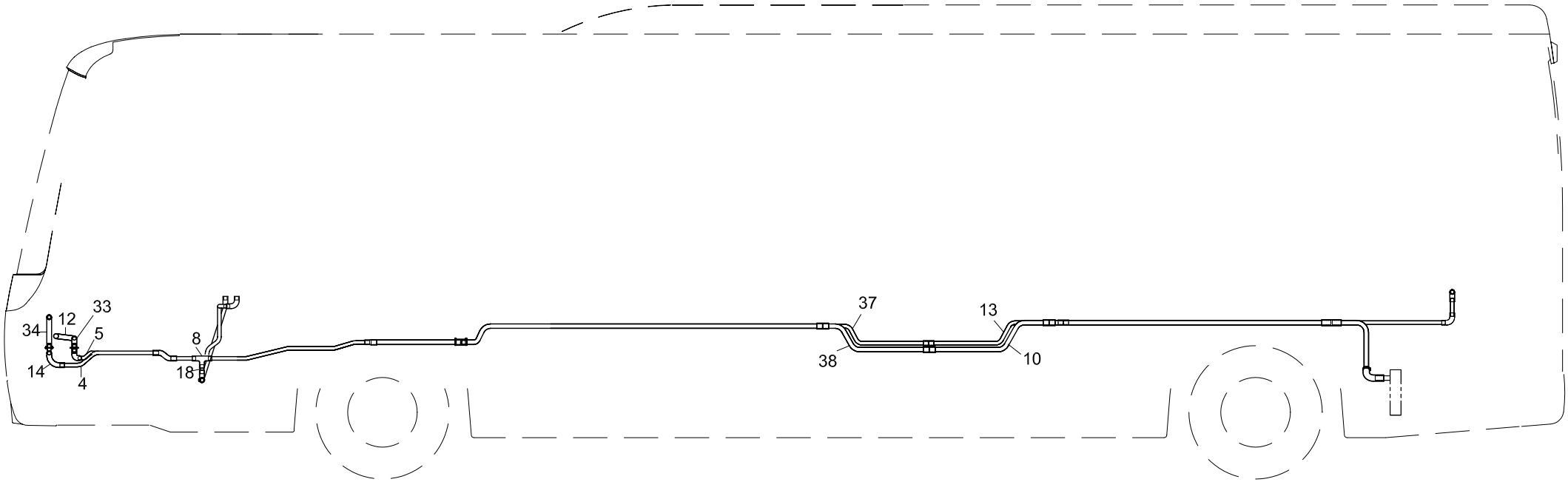

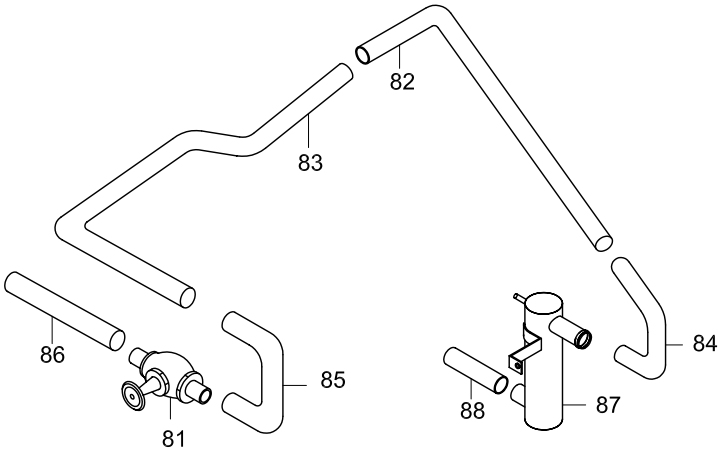

ARKA HORTUMLAR
REAR PIPING

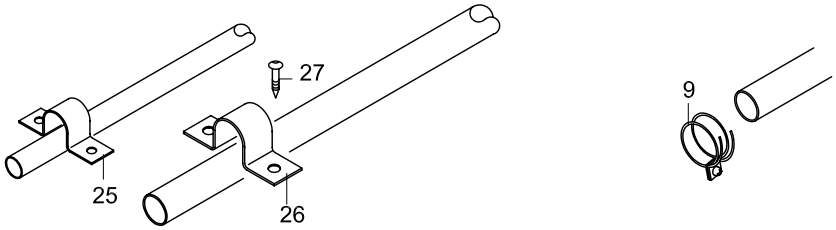

TEMSA	Sıcak su boruları - 02.07.2004 e kadar Heater piping - up to 2004'07.02 Warmwasser Rohre	Drw.no: 62322-97020-71Y Vehicle Model: TB162W, TB162X TB163W, TB163X	24-020 RevDate: Page: 1

Pos	Part Number	Turkish	English	German	Qty	R/P	From	Up To	Original Number Supplier
2	62322-94010-02Y	SICAK SU BORUSU	HOT WATER PIPE		1		1	020704	D.26
3	62322-94010-04Y	SICAK SU BORUSU	HOT WATER PIPE		1		1	020704	D.32
4	62322-97010-04Y	SICAK SU BORUSU	HOT WATER PIPE		1		1	020704	D.26
5	62322-97010-47Y	SICAK SU BORUSU	HOT WATER PIPE		1		1	020704	D.26
6	62322-97020-06Y	SICAK SU BORUSU	HOT WATER PIPE		1		1	020704	D.26
7	62322-97020-07Y	SICAK SU BORUSU	HOT WATER PIPE		1		1	020704	D.26
8	TN211127Y	T HORTUM DİRSEK	T- HOSE ELBOW		2		1	020704	
9	MF661018Y	KELEPÇE	CLAMP		AR		1		
10	62322-97020-38Y	SICAK SU BORUSU	HOT WATER PIPE		2		1	020704	D.32
11	TU213100Y	SU HORTUMU	HOSE WATER		2		1	020704	
12	62322-60720-00Y	SU HORTUMU	HOSE WATER		1		1	020704	D.32
13	62322-97010-46Y	SICAK SU BORUSU	HOT WATER PIPE		2		1	020704	D.26
14	62322-90040-70Y	SICAK SU BORUSU	HOT WATER PIPE		1		1	020704	D.32
15	62322-97020-15Y	SICAK SU BORUSU	HOT WATER PIPE		1		1	020704	D.26
16	62322-97020-16Y	SICAK SU BORUSU	HOT WATER PIPE		1		1	020704	D.26
17	MC292119Y	HORTUM	HOSE		1		1	020704	
18	62322-94010-43Y	ADAPTÖR	SLEEVE		1		1	020704	
20	72323-00121-20Y	ADAPTÖR	SLEEVE		4		1	020704	
21	MK106799Y	HORTUM	HOSE		1		1	020704	D.32
22	62348-61030-05Y	HORTUM DİRSEK	HOSE ELBOW		1		1	020704	
23	62322-90200-01Y	SICAK SU BORUSU	HOT WATER PIPE		1		1	020704	D.32
25	MC329087Y	KELEPÇE	CLAMP		AR		1	020704	D.26
26	MC329086Y	KELEPÇE	CLAMP		AR		1	020704	D.32
27	MF100027Y	CIVATA	BOLT		AR		1		
28	62322-96020-28Y	SICAK SU BORUSU	HOT WATER PIPE		1		1	020704	D.32
29	62322-96020-29Y	SICAK SU BORUSU	HOT WATER PIPE		1		1	020704	D.26
30	62322-97020-30Y	SICAK SU BORUSU	HOT WATER PIPE		1		1	020704	D.26
31	62322-97020-31Y	SICAK SU BORUSU	HOT WATER PIPE		1		1	020704	D.26
33	62322-40720-00Y	HORTUM	HOSE		1		1	020704	
34	TU213117Y	HORTUM	HOSE		1		1	020704	
35	62322-60730-70Y	SICAK SU BORUSU	HOT WATER PIPE		1		1	020704	
36	72323-00121-25Y	ADAPTÖR	SLEEVE		3		1	020704	
37	62322-97020-39Y	SICAK SU BORUSU	HOT WATER PIPE		1		1	020704	D.26
38	62322-97020-40Y	SICAK SU BORUSU	HOT WATER PIPE		1		1	020704	D.32
39	62322-90730-70Y	SICAK SU BORUSU	HOT WATER PIPE		1		1	020704	

TEMSA	Sıcak su boruları - 02.07.2004 e kadar Heater piping - up to 2004'07.02 Warmwasser Rohre	Drw.no: 62322-97020-71Y Vehicle Model: TB162W, TB162X TB163W, TB163X	24-020 RevDate: Page: 2

Pos	Part Number	Turkish	English	German	Qty	R/P	From	Up To	Original Number Supplier
81	MC393410-01Y	SÜRGÜLÜ VANA	VALVE		1		1		
82	62322-90200-01Y	BORU	PIPE		1		1		
83	62322-90200-02Y	BORU	PIPE		1		1		for manual transmission
83	62322-90200-05Y	BORU	PIPE		1		1		for automatic transmission
84	62348-61030-05Y	HORTUM DİRSEK	ELBOW		1		1		
85	62322-90200-00Y	HORTUM DİRSEK	ELBOW		1		1		
86	MC329063Y	SU HORTUMU	HOSE WATER		1		1		
87	62322-90210-70BY	SU AYIRICI	WATER SEPERATOR		1		1		for manual transmission
87	62322-90210-71Y	SU AYIRICI	WATER SEPERATOR		1		1		for automatic transmission
88	62322-90200-03Y	SU HORTUMU	HOSE WATER		1		1		

TEMSA

Sıcak su boruları - 02.07.2004 den sonra
Heater Piping - after 2004'07.02
Warmwasser Rohre

Vehicle Model: TB162W, TB162X, TB163W, TB163X,

Group No : 24-021
Draw. Num. :
x
Rev. Date :
Page : 1

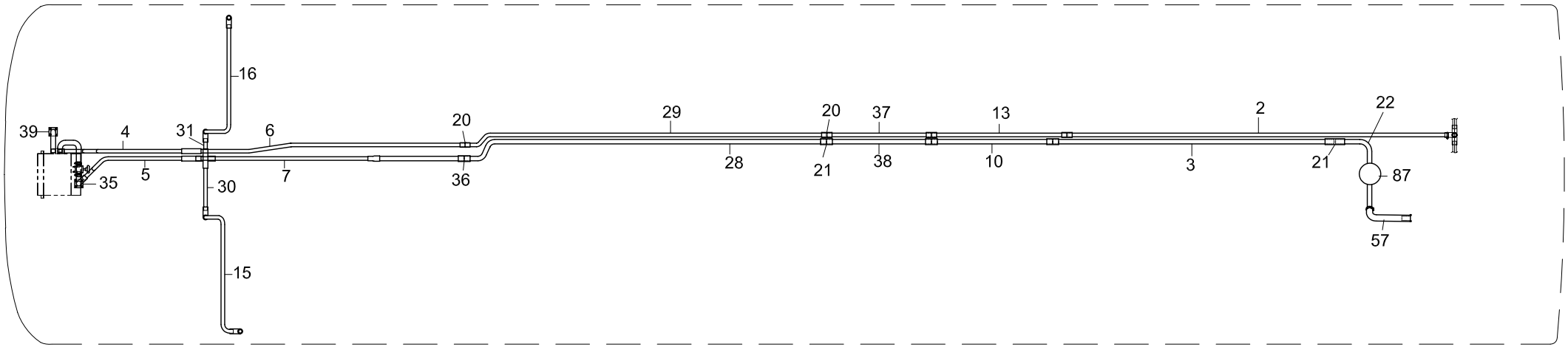

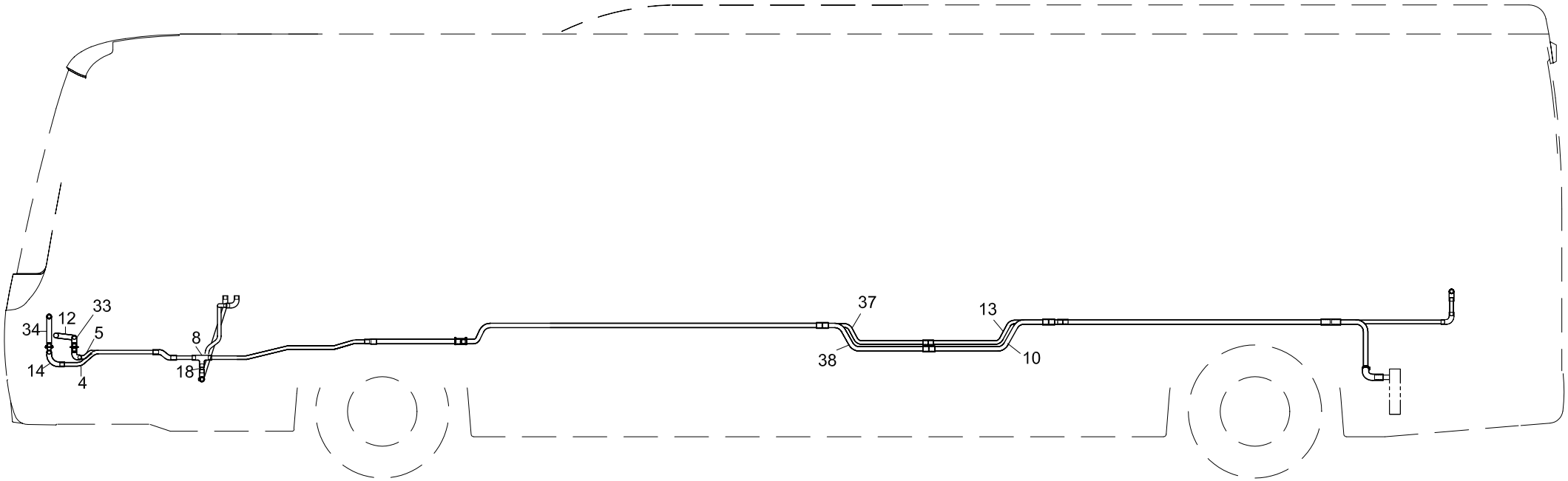

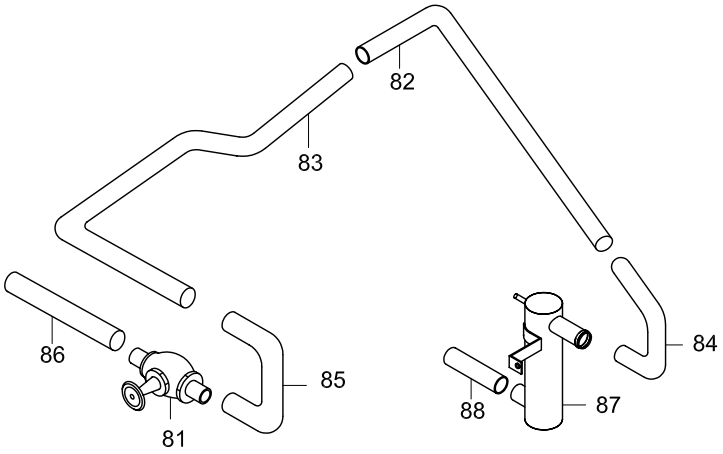

ARKA HORTUMLAR
REAR PIPING

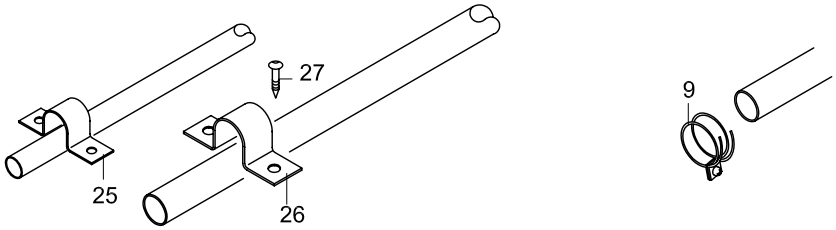

TEMSA	Sıcak su boruları - 02.07.2004 den sonra Heater piping - after 2004'07.02 Warmwasser Rohre	Drw.no: 62322-97040-71Y Vehicle Model: TB162W, TB162X TB163W, TB163X	24-021 RevDate: Page: 1

Pos	Part Number	Turkish	English	German	Qty	R/P	From	Up To	Original Number Supplier
2	62322-97050-41Y	SICAK SU BORUSU	HOT WATER PIPE		1		020704		D.23
3	62322-97050-43Y	SICAK SU BORUSU	HOT WATER PIPE		1		020704		D.28
4	62322-97040-04Y	SICAK SU BORUSU	HOT WATER PIPE		1		020704		D.23
5	62322-97040-47Y	SICAK SU BORUSU	HOT WATER PIPE		1		020704		D.23
6	62322-97050-06Y	SICAK SU BORUSU	HOT WATER PIPE		1		020704		D.23
7	62322-97050-07Y	SICAK SU BORUSU	HOT WATER PIPE		1		020704		D.23
8	62322-40490-02Y	T HORTUM DİRSEK	T- HOSE ELBOW		2		020704		
9	MF661018Y	KELEPÇE	CLAMP		AR		1		
10	62322-97050-38Y	SICAK SU BORUSU	HOT WATER PIPE		2		020704		D.28
11	TU213200Y	SU HORTUMU	HOSE WATER		2		020704		
12	62322-60750-00Y	SU HORTUMU	HOSE WATER		1		1		D.28
13	62322-97040-46Y	SICAK SU BORUSU	HOT WATER PIPE		2		020704		D.23
14	62322-90050-70Y	SICAK SU BORUSU	HOT WATER PIPE		1		020704		D.28
15	62322-97050-15Y	SICAK SU BORUSU	HOT WATER PIPE		1		020704		D.23
16	62322-97050-16Y	SICAK SU BORUSU	HOT WATER PIPE		1		020704		D.23
17	MC292149Y	HORTUM	HOSE		1		020704		
18	62322-94030-43Y	ADAPTÖR	SLEEVE		1		020704		D.23
20	MK106798Y	ADAPTÖR	SLEEVE		4		020704		D.23
21	MK106799Y	HORTUM	HOSE		1		020704		D.23
22	62348-61430-05Y	HORTUM DİRSEK	HOSE ELBOW		1		020704		
25	MC329487Y	KELEPÇE	CLAMP		AR		1		D.23
26	MC329486Y	KELEPÇE	CLAMP		AR		1		D.28
27	MF100027Y	CIVATA	BOLT		AR		1		
28	62322-96050-28Y	SICAK SU BORUSU	HOT WATER PIPE		1		020704		D.28
29	62322-96050-29Y	SICAK SU BORUSU	HOT WATER PIPE		1		020704		D.23
30	62322-97050-30Y	SICAK SU BORUSU	HOT WATER PIPE		1		020704		D.23
31	62322-97050-31Y	SICAK SU BORUSU	HOT WATER PIPE		1		020704		D.23
33	62322-40720-00Y	HORTUM	HOSE		1		020704		
34	TU213157Y	HORTUM	HOSE		1		020704		
35	62322-60730-70Y	SICAK SU BORUSU	HOT WATER PIPE		1		020704		
37	62322-97050-39Y	SICAK SU BORUSU	HOT WATER PIPE		1		020704		D.23
38	62322-97050-40Y	SICAK SU BORUSU	HOT WATER PIPE		1		020704		D.28
39	62322-90730-70Y	SICAK SU BORUSU	HOT WATER PIPE		1		020704		
57	62322-97040-06Y	SICAK SU BORUSU	HOT WATER PIPE		1		020704		
81	MC393410-01Y	SÜRGÜLÜ VANA	VALVE		1		1		

TEMSA	Sıcak su boruları - 02.07.2004 den sonra Heater piping - after 2004'07.02 Warmwasser Rohre	Drw.no: 62322-97040-71Y Vehicle Model: TB162W, TB162X TB163W, TB163X	24-021 RevDate: Page: 2

Pos	Part Number	Turkish	English	German	Qty	R/P	From	Up To	Original Number Supplier
82	62322-90200-01Y	BORU	PIPE		1		1		
83	62322-90200-02Y	BORU	PIPE		1		1		for manual transmission
83	62322-90200-05Y	BORU	PIPE		1		1		for automatic transmission
84	62348-61030-05Y	HORTUM DİRSEK	ELBOW		1		1		
85	62322-90200-00Y	HORTUM DİRSEK	ELBOW		1		1		
86	MC329063Y	SU HORTUMU	HOSE WATER		1		1		
87	62322-90210-70BY	SU AYIRICI	WATER SEPERATOR		1		1		for manual transmission
87	62322-90210-71Y	SU AYIRICI	WATER SEPERATOR		1		1		for automatic transmission
88	62322-90200-03Y	SU HORTUMU	HOSE WATER		1		1		

TEMSA	Sıcak su boruları - 02.07.2004 e kadar Heater Piping - up to 2004'07.02 Warmwasser Rohre	Group No : 24-022 Draw. Num. : x Rev. Date : Page : 1	
	Vehicle Model: TB162Z, TB162Y, TB163Z, TB163Y		

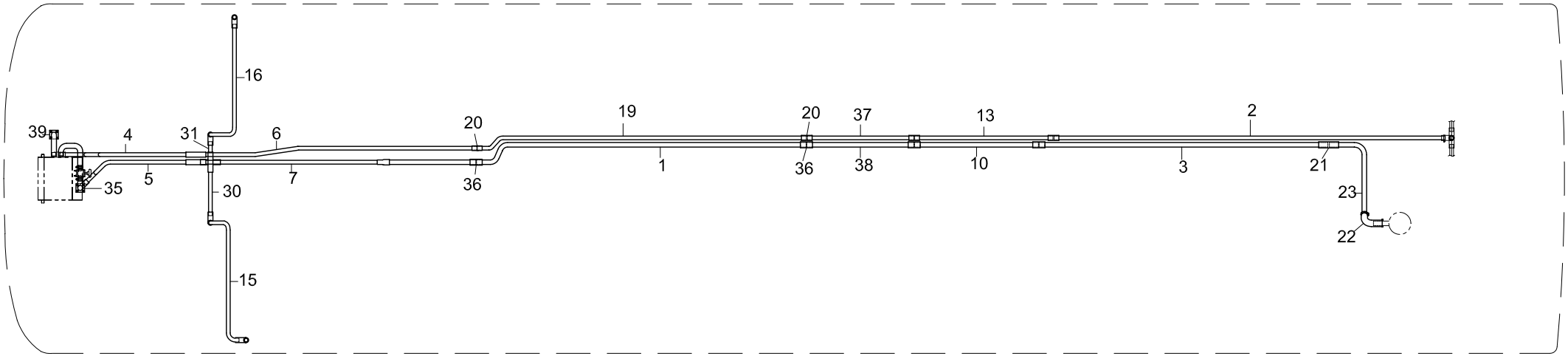

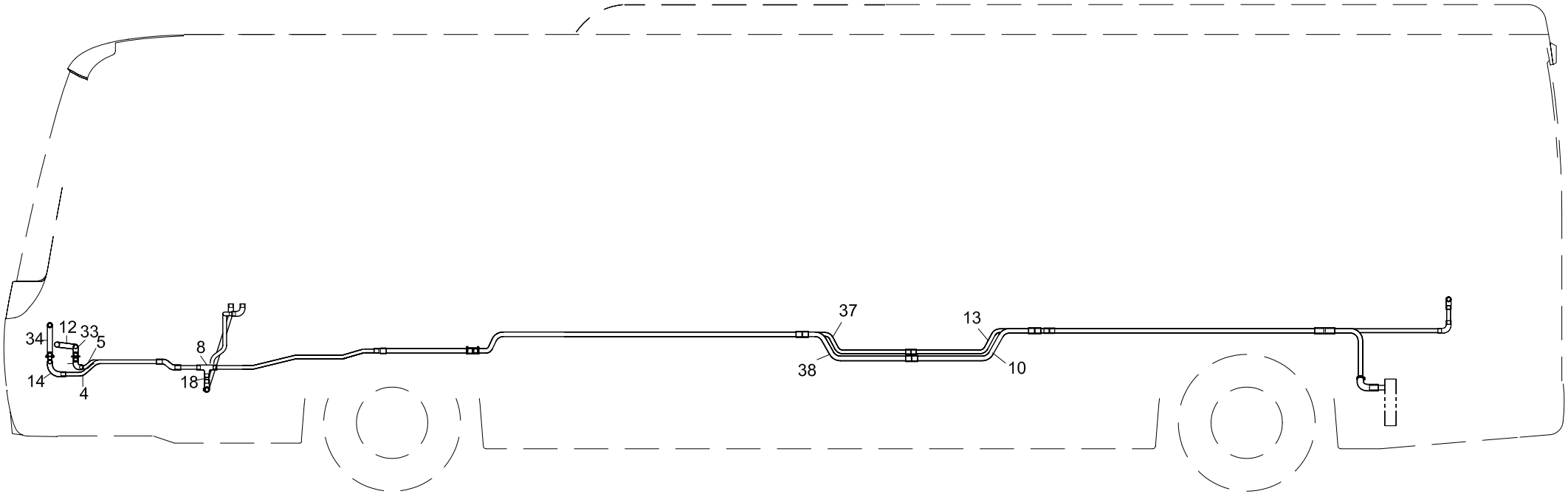

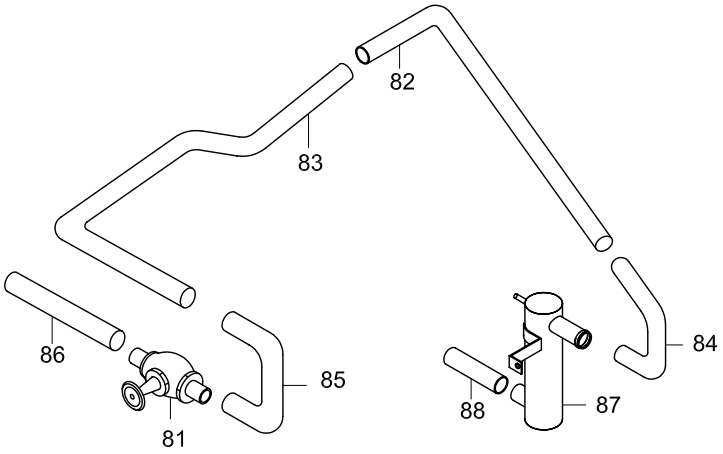

ARKA HORTUMLAR
REAR PIPING

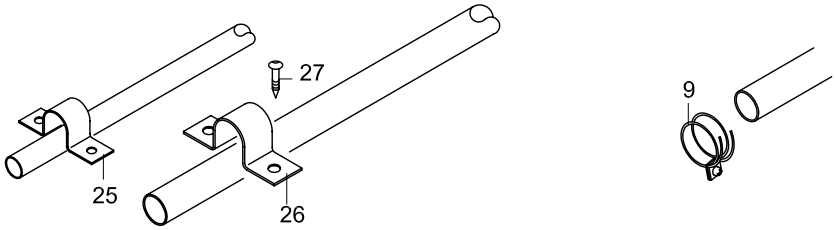

TEMSA	Sıcak su boruları - 02.07.2004 e kadar Heater piping - up to 2004'07.02 Warmwasser Rohre	Drw.no: 62322-97020-70 Vehicle Model: TB162Z, TB162Y TB163Z, TB163Y	24-022 RevDate: Page: 1

Pos	Part Number	Turkish	English	German	Qty	R/P	From	Up To	Original Number Supplier
1	62322-97020-01Y	SICAK SU BORUSU	HOT WATER PIPE		1		1	020704	D.32
2	62322-94010-02Y	SICAK SU BORUSU	HOT WATER PIPE		1		1	020704	D.26
3	62322-94010-04Y	SICAK SU BORUSU	HOT WATER PIPE		1		1	020704	D.32
4	62322-97010-04Y	SICAK SU BORUSU	HOT WATER PIPE		1		1	020704	D.26
5	62322-97010-47Y	SICAK SU BORUSU	HOT WATER PIPE		1		1	020704	D.26
6	62322-97020-06Y	SICAK SU BORUSU	HOT WATER PIPE		1		1	020704	D.26
7	62322-97020-07Y	SICAK SU BORUSU	HOT WATER PIPE		1		1	020704	D.26
8	TN211127Y	T HORTUM DİRSEK	T- HOSE ELBOW		2		1	020704	
9	MF661018Y	KELEPÇE	CLAMP		AR		1	020704	
10	62322-97020-38Y	SICAK SU BORUSU	HOT WATER PIPE		2		1	020704	D.32
11	TU213100Y	SU HORTUMU	HOSE WATER		2		1	020704	
12	62322-60720-00Y	SU HORTUMU	HOSE WATER		1		1	020704	D.32
13	62322-97010-46Y	SICAK SU BORUSU	HOT WATER PIPE		2		1	020704	D.26
14	62322-90040-70Y	SICAK SU BORUSU	HOT WATER PIPE		1		1	020704	D.32
15	62322-97020-15Y	SICAK SU BORUSU	HOT WATER PIPE		1		1	020704	D.26
16	62322-97020-16Y	SICAK SU BORUSU	HOT WATER PIPE		1		1	020704	D.26
17	MC292119Y	HORTUM	HOSE		1		1	020704	
18	62322-94010-43Y	ADAPTÖR	SLEEVE		1		1	020704	
19	62322-97020-19Y	SICAK SU BORUSU	HOT WATER PIPE		1		1	020704	D.26
20	72323-00121-20Y	ADAPTÖR	SLEEVE		4		1	020704	
21	MK106799Y	HORTUM	HOSE		1		1	020704	D.32
22	62348-61030-05Y	HORTUM DİRSEK	HOSE ELBOW		1		1	020704	
23	62322-90200-01Y	SICAK SU BORUSU	HOT WATER PIPE		1		1	020704	D.32
25	MC329087Y	KELEPÇE	CLAMP		AR		1	020704	D.26
26	MC329086Y	KELEPÇE	CLAMP		AR		1	020704	D.32
27	MF100027Y	CIVATA	BOLT		AR		1	020704	
30	62322-97020-30Y	SICAK SU BORUSU	HOT WATER PIPE		1		1	020704	D.26
31	62322-97020-31Y	SICAK SU BORUSU	HOT WATER PIPE		1		1	020704	D.26
33	62322-40720-00Y	HORTUM	HOSE		1		1	020704	
34	TU213117Y	HORTUM	HOSE		1		1	020704	
35	62322-60730-70Y	SICAK SU BORUSU	HOT WATER PIPE		1		1	020704	
36	72323-00121-25Y	ADAPTÖR	SLEEVE		3		1	020704	
37	62322-97020-39Y	SICAK SU BORUSU	HOT WATER PIPE		1		1	020704	D.26
38	62322-97020-40Y	SICAK SU BORUSU	HOT WATER PIPE		1		1	020704	D.32
39	62322-90730-70Y	SICAK SU BORUSU	HOT WATER PIPE		1		1		

TEMSA	Sıcak su boruları - 02.07.2004 e kadar Heater piping - up to 2004'07.02 Warmwasser Rohre	Drw.no: 62322-97020-70 Vehicle Model: TB162Z, TB162Y TB163Z, TB163Y	24-022 RevDate: Page: 2

Pos	Part Number	Turkish	English	German	Qty	R/P	From	Up To	Original Number Supplier
81	MC393410-01Y	SÜRGÜLÜ VANA	VALVE		1		1		
82	62322-90200-01Y	BORU	PIPE		1		1		
83	62322-90200-02Y	BORU	PIPE		1		1		
84	62348-61030-05Y	HORTUM DİRSEK	ELBOW		1		1		
85	62322-90200-00Y	HORTUM DİRSEK	ELBOW		1		1		
86	MC329063Y	SU HORTUMU	HOSE WATER		1		1		
87	62322-90210-70BY	SU AYIRICI	WATER SEPERATOR		1		1		
88	TH166038Y	SU HORTUMU d.38	HOSE WATER		AR		1		

TEMSA	Sıcak su boruları - 02.07.2004 den sonra Heater Piping - after 2004'07.02 Warmwasser Rohre	Group No : 24-023 Draw. Num. : x Rev. Date : Page : 1	
	Vehicle Model: TB162Z, TB162Y, TB163Z, TB163Y		

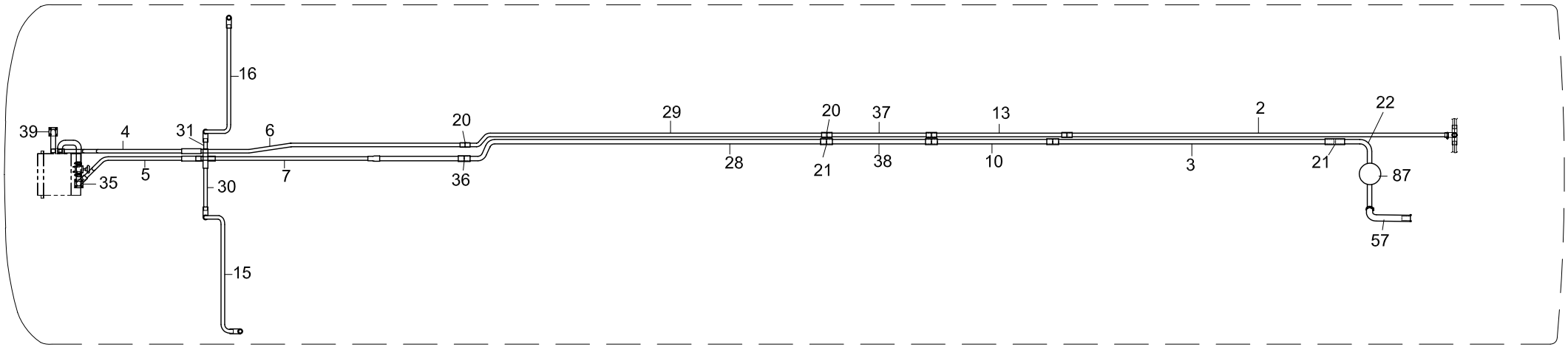

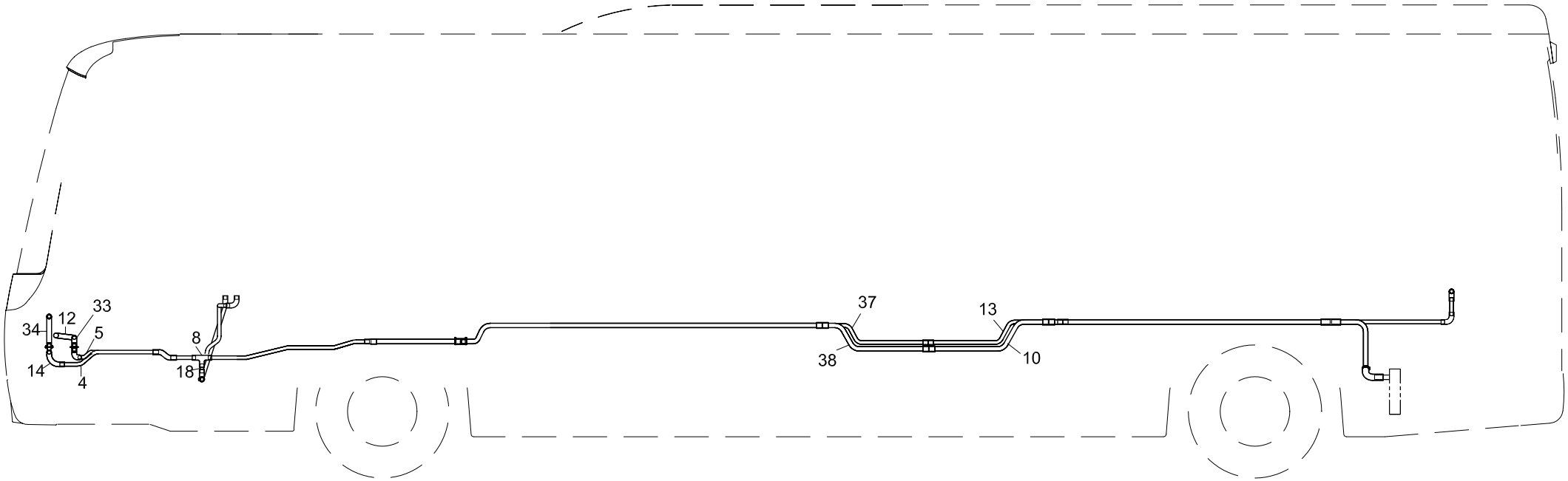

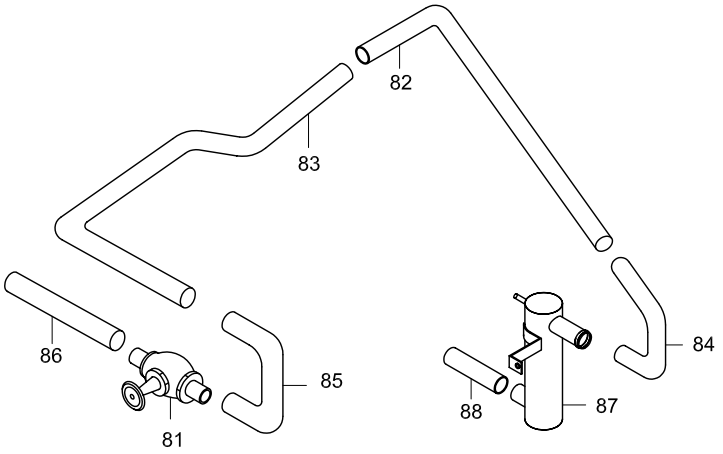

ARKA HORTUMLAR
REAR PIPING

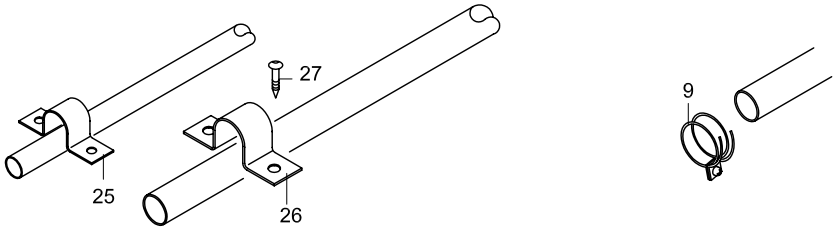

TEMSA	Sıcak su boruları - 02.07.2004 den sonra Heater piping - after 2004'07.02 Warmwasser Rohre	Drw.no: 62322-97040-70Y Vehicle Model: TB162Z, TB162Y TB163Z, TB163Y	24-023 RevDate: Page: 1

Pos	Part Number	Turkish	English	German	Qty	R/P	From	Up To	Original Number Supplier
2	62322-97050-02Y	SICAK SU BORUSU	HOT WATER PIPE		1		020704		D.23
3	62322-97050-44Y	SICAK SU BORUSU	HOT WATER PIPE		1		020704		D.28
4	62322-97040-04Y	SICAK SU BORUSU	HOT WATER PIPE		1		020704		D.23
5	62322-97040-47Y	SICAK SU BORUSU	HOT WATER PIPE		1		020704		D.23
6	62322-97050-06Y	SICAK SU BORUSU	HOT WATER PIPE		1		020704		D.23
7	62322-97050-07Y	SICAK SU BORUSU	HOT WATER PIPE		1		020704		D.23
8	62322-40490-02Y	T HORTUM DİRSEK	T- HOSE ELBOW		2		020704		
9	MF661018Y	KELEPÇE	CLAMP		AR		1		
10	62322-97050-38Y	SICAK SU BORUSU	HOT WATER PIPE		2		020704		D.28
11	TU213200Y	SU HORTUMU	HOSE WATER		2		020704		
12	62322-60750-00Y	SU HORTUMU	HOSE WATER		1		1		D.28
13	62322-97040-46Y	SICAK SU BORUSU	HOT WATER PIPE		2		020704		D.23
14	62322-90050-70Y	SICAK SU BORUSU	HOT WATER PIPE		1		020704		D.28
15	62322-97050-15Y	SICAK SU BORUSU	HOT WATER PIPE		1		020704		D.23
16	62322-97050-16Y	SICAK SU BORUSU	HOT WATER PIPE		1		020704		D.23
17	MC292149Y	HORTUM	HOSE		1		020704		
18	62322-94030-43Y	ADAPTÖR	SLEEVE		1		020704		D.23
20	MK106798Y	ADAPTÖR	SLEEVE		4		020704		D.23
21	MK106799Y	HORTUM	HOSE		1		020704		D.23
22	62348-61430-05Y	HORTUM DİRSEK	HOSE ELBOW		1		020704		
25	MC329487Y	KELEPÇE	CLAMP		AR		1		D.23
26	MC329486Y	KELEPÇE	CLAMP		AR		1		D.28
27	MF100027Y	CIVATA	BOLT		AR		1		
28	62322-97050-01Y	SICAK SU BORUSU	HOT WATER PIPE		1		020704		D.28
29	62322-97050-19Y	SICAK SU BORUSU	HOT WATER PIPE		1		020704		D.23
30	62322-97050-30Y	SICAK SU BORUSU	HOT WATER PIPE		1		020704		D.23
31	62322-97050-31Y	SICAK SU BORUSU	HOT WATER PIPE		1		020704		D.23
33	62322-40720-00Y	HORTUM	HOSE		1		020704		
34	TU213157Y	HORTUM	HOSE		1		020704		
35	62322-60730-70Y	SICAK SU BORUSU	HOT WATER PIPE		1		020704		
37	62322-97050-39Y	SICAK SU BORUSU	HOT WATER PIPE		1		020704		D.23
38	62322-97050-40Y	SICAK SU BORUSU	HOT WATER PIPE		1		020704		D.28
39	62322-90730-70Y	SICAK SU BORUSU	HOT WATER PIPE		1		020704		
57	62322-97040-06Y	SICAK SU BORUSU	HOT WATER PIPE		1		020704		
81	MC393410-01Y	SÜRGÜLÜ VANA	VALVE		1		1		

TEMSA	Sıcak su boruları - 02.07.2004 den sonra Heater piping - after 2004'07.02 Warmwasser Rohre	Drw.no: 62322-97040-70Y Vehicle Model: TB162Z, TB162Y TB163Z, TB163Y	24-023 RevDate: Page: 2

Pos	Part Number	Turkish	English	German	Qty	R/P	From	Up To	Original Number Supplier
82	62322-90200-01Y	BORU	PIPE		1		1		
83	62322-90200-02Y	BORU	PIPE		1		1		for manual transmission
83	62322-90200-05Y	BORU	PIPE		1		1		for automatic transmission
84	62348-61030-05Y	HORTUM DİRSEK	ELBOW		1		1		
85	62322-90200-00Y	HORTUM DİRSEK	ELBOW		1		1		
86	MC329063Y	SU HORTUMU	HOSE WATER		1		1		
87	62322-90210-70BY	SU AYIRICI	WATER SEPERATOR		1		1		for manual transmission
87	62322-90210-71Y	SU AYIRICI	WATER SEPERATOR		1		1		for automatic transmission
88	62322-90200-03Y	SU HORTUMU	HOSE WATER		1		1		

TEMSA	Ön ısıtma ünitesi Preheather Unit Vorheizsystem	Group No : 24-030 Draw. Num. : x Rev. Date : Page : 1
	Vehicle Model: TB162W, TB162Z, TB162X, TB162Y, TB163W, TB163Z, TB163X, TB163Y	

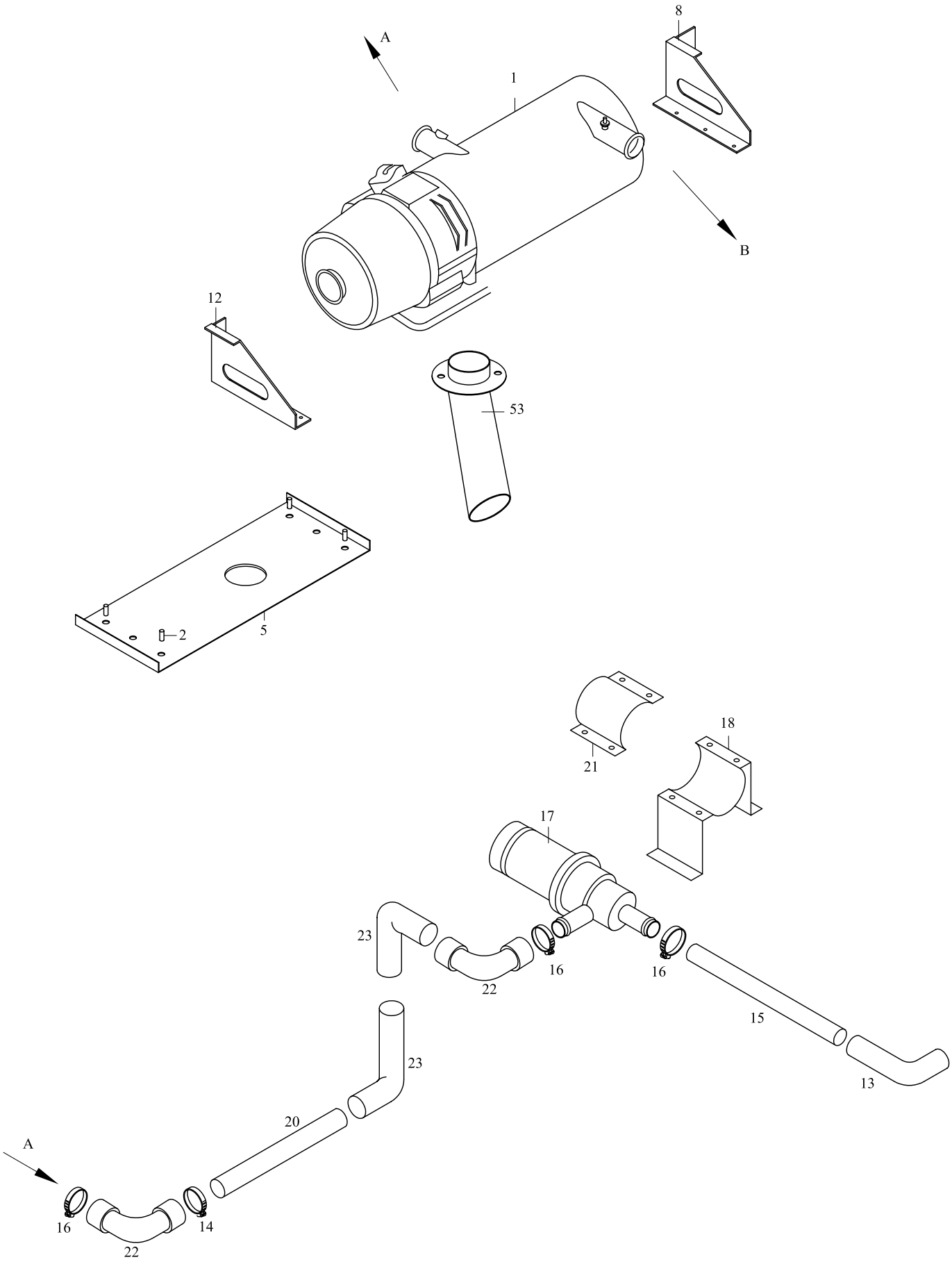

TEMSA	Ön ısıtma ünitesi Preheather Unit Vorheizsystem	Group No : 24-030 Draw. Num. : x Rev. Date :
	Vehicle Model: TB162W, TB162Z, TB162X, TB162Y, TB163W, TB163Z, TB163X, TB163Y	Page : 2

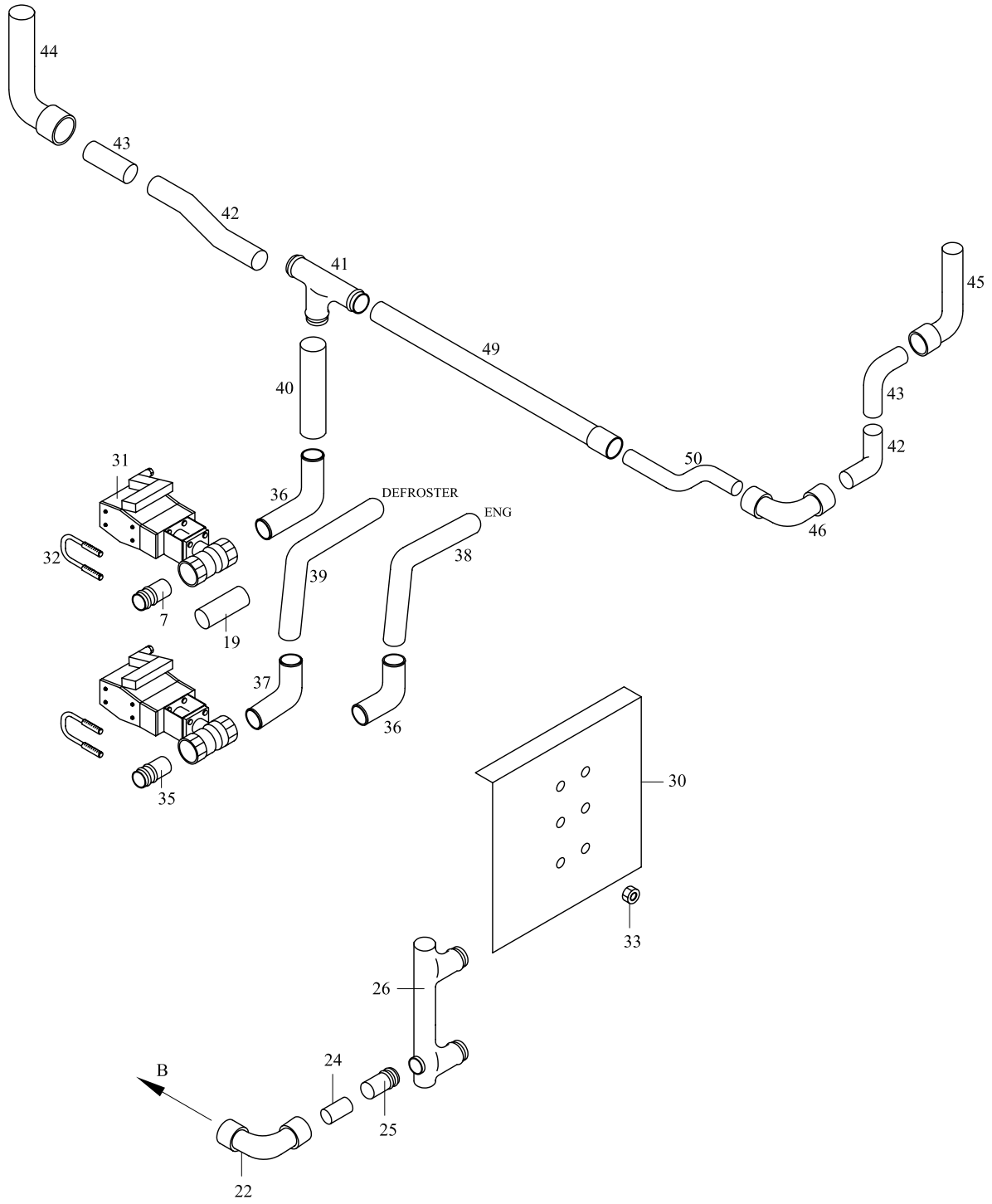

TEMSA	Ön ısıtma ünitesi Preheater unit Vorheizsystem	Drw.no: 62348-96100-70 Vehicle Model: **TB162W, TB162Z, TB162X, TB162Y** **TB163W, TB163Z, TB163X, TB163Y**	**24-030** RevDate: Page: 1

Pos	Part Number	Turkish	English	German	Qty	R/P	From	Up To	Original Number Supplier
1	62321-90020-50Y	ÖN ISITMA ÜNİTESİ	PREHEATER UNIT		1		1		EBERSPACHER HYDR
2	61108-60900-00Y	ARA PARÇA	SPACER		4		1		
5	62348-94100-05Y	WEBASTO TABLASI	PREHEATER, BASE		1		1		
7	62348-94100-07Y	ADAPTÖR	ADAPTER		10		1		
8	62348-94100-08Y	BRAKET	BARCKET		1		1		
12	62348-94100-12Y	BRAKET	BARCKET		1		1		
13	62348-90100-30Y	HORTUM DİRSEK	HOSE ELBOW		AR		1		
14	MF661021Y	KELEPÇE	CLAMP		AR		1		D.42
15	62322-90030-71Y	HORTUM	HOSE		AR		1		
16	MF661025Y	KELEPÇE	CLAMP		AR		1		D.48
17	62322-90010-13Y	SU POMPASI	WATER PUMP		1		1		EBERSPACHER
18	62348-90100-36Y	KELEPÇE BRAKETİ	BRACKET CLAMP		1		1		
19	MK106799Y	HORTUM	HOSE		AR		1		
20	62348-94100-20Y	BORU	PIPE		1		1		
21	62322-90010-23Y	SU POMPASI KELEPÇESİ	CLAMP, WEATER PUMP		1		1		
22	62348-61030-05Y	HORTUM DİRSEK	HOSE ELBOW		3		1		
23	62348-90100-31Y	BORU	PIPE		2		1		
24	62348-94100-24Y	BORU	PIPE		1		1		
25	MK106799Y	HORTUM	HOSE		AR		1		
26	62348-96100-26Y	KOLLEKTÖR	COLLECTOR		1		1		
30	62348-94100-30Y	VANA BRAKETİ	BRACKET VALVE		1		1		
31	TC252500Y	ELEKTRİKLİ VANA	ELECTRICAL VALVE		2		1		
32	TU211113Y	U- CIVATA	U-BOLT		3		1		
33	MF430003Y	SOMUN	NUT		AR		1		
35	62348-94100-35Y	ADAPTÖR	SLEEVE		1		1		
36	TU213119Y	HORTUM DİRSEK	HOSE ELBOW		2		1		32
37	TU213105Y	HORTUM DİRSEK	HOSE ELBOW		1		1		25
38	62348-90100-35Y	BORU	PIPE		1		1		
39	62348-94100-39Y	BORU	PIPE		1		1		
40	62348-96100-40Y	BORU	PIPE		1		1		
41	TN211127Y	T-DİRSEK	T - ELBOW		1		1		
42	62348-90100-13Y	BORU	PIPE		1		1		
43	62348-90100-48Y	ADAPTÖR	ADAPTER		1		1		
44	62348-96100-44Y	BORU	PIPE		1		1		
45	TU213108Y	DİRSEK	ELBOW		1		1		

TEMSA	Ön ısıtma ünitesi Preheater unit Vorheizsystem	Drw.no: 62348-96100-70 Vehicle Model: **TB162W, TB162Z, TB162X, TB162Y** **TB163W, TB163Z, TB163X, TB163Y**	**24-030** RevDate: Page: 2

Pos	Part Number	Turkish	English	German	Qty	R/P	From	Up To	Original Number Supplier
46	TU213113Y	DİRSEK	ELBOW		1		1		
49	62348-96100-49Y	BORU	PIPE		1		1		
50	62348-90100-02Y	BORU	PIPE		1		1		
51	62348-60740-80Y	BORU	PIPE		1		1		
53	62348-94100-53Y	EGZOZ BORUSU	PIPE EXHAUST		1		1		

TEMSA	Defroster Defroster Entfroster	Group No : 24-040 Draw. Num. : x Rev. Date :
	Vehicle Model: TB162W, TB162Z, TB162X, TB162Y, TB163W, TB163Z, TB163X, TB163Y	Page : 1

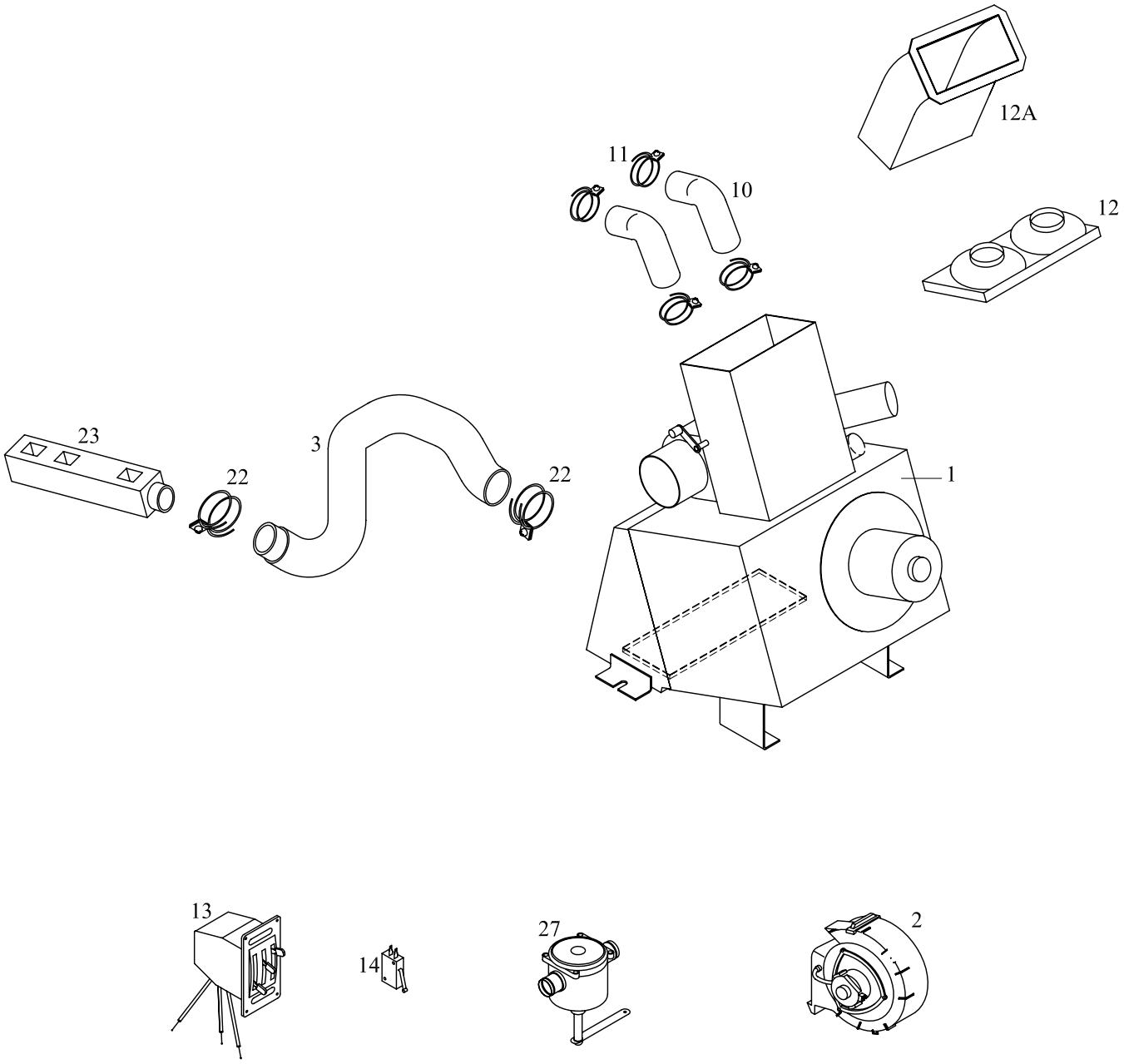

TEMSA	Defroster Defroster Entfroster	Drw.no 62332-96100-71/94100-70/62335-90020-70 Vehicle Model: **TB162W, TB162Z, TB162X, TB162Y** **TB163W, TB163Z, TB163X, TB163Y**	**24-040** RevDate: Page: 1

Pos	Part Number	Turkish	English	German	Qty	R/P	From	Up To	Original Number Supplier
1	62335-94060-83Y	DEFROSTER ÜNİTESİ	DEFROSTER UNIT		1		5	290704	55032158 BAŞKURT
1	62335-94060-85Y	DEFROSTER ÜNİTESİ	DEFROSTER UNIT		1		290704		
2	52716402	MOTOR+FAN	MOTOR+FAN		1		5	290704	BAŞKURT
2	52716409	MOTOR+FAN	MOTOR+FAN		1		290704		
3	TC329189Y	DEFROSTER HORTUMU	HOSE DEFROSTER		1		1		
10	62332-80100-01Y	BORU	PIPE		2		1		
11	62332-80100-02Y	KELEPÇE	CLAMP		4		1		
12	62332-94100-03Y	MENFEZ	NOZZLE		1		1	301104	
12A	62335-96160-70Y	MENFEZ	NOZZLE		1		301104		
13	62335-90020-01Y	DEFROSTER KUMANDASI	DEFROSTER CONTROL		1		1		
14	TM252165Y	LİMİT SİVİCİ	LIMIT SWITCH		1		1		
22	62332-30100-38Y	KELEPÇE	CLAMP		2		1		
23	62332-60100-39Y	MENFEZ-SÜRÜCÜ AYAĞINA	NOZZLE-DRIVERS FOOT		1		1		
27	62332-30100-35Y	KOLLU VANA	VANA		1		1		

25 KOLTUK
SEAT
x

25-010	Yolcu koltukları Passenger seats x	TB162W TB163W	TB162Z TB163Z	TB162X TB163X	TB162Y TB163Y
25-020	Sürücü koltuğu Drivers seat x			TB162X TB163X	TB162Y TB163Y
25-021	Sürücü koltuğu Drivers seat x	TB162W TB163W	TB162Z TB163Z		
25-030	Hostes koltuğu Assistance seat x	TB162W TB163W	TB162Z TB163Z	TB162X TB163X	TB162Y TB163Y
25-040	Koltuk rayı - 30.09.2004 e kadar Seat rail - up to 2004'09.30 x	TB162W TB163W			
25-041	Koltuk rayı - 30.09.2004 e kadar Seat rail - up to 2004'09.30 x		TB162Z TB163Z		
25-042	Koltuk rayı - 30.09.2004 den sonra Seat rail - after 2004'09.30 x	TB162W TB163W	TB162Z TB163Z	TB162X TB163X	TB162Y TB163Y

TEMSA	Yolcu koltukları Passenge seats x	Group No : 25-010 Draw. Num. : x Rev. Date : Page : 1
	Vehicle Model: TB162W, TB162Z, TB162X, TB162Y, TB163W, TB163Z, TB163X, TB163Y	

TB162Z

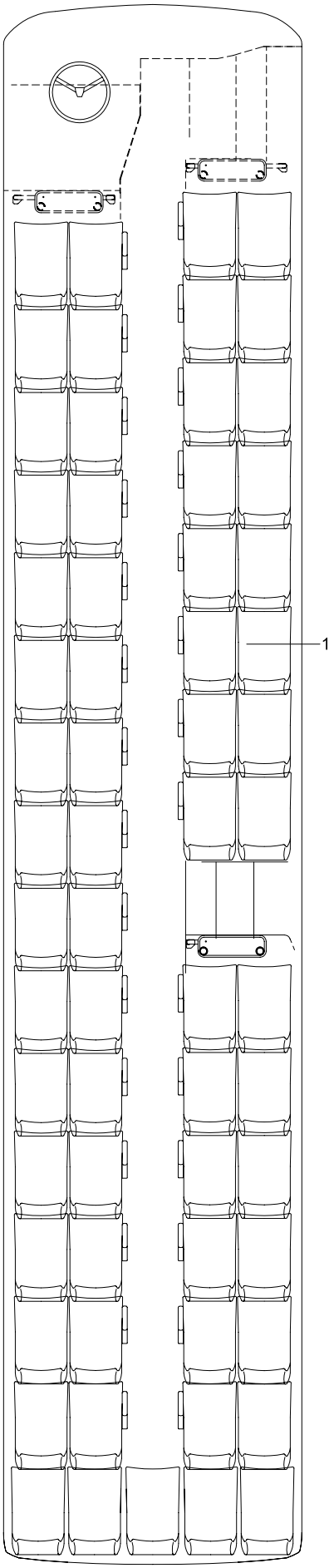

TB162W

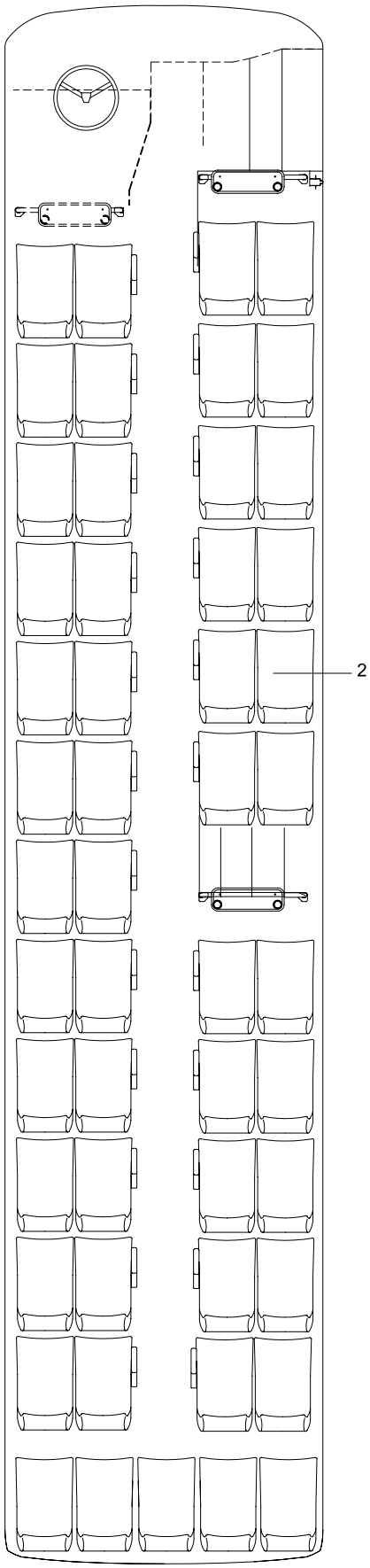

TEMSA	Yolcu koltukları Passenger seats	Drw.no: Vehicle Model: TB162W, TB162Z, TB162X, TB162Y TB163W, TB163Z, TB163X, TB163Y	25-010 RevDate: Page: 1

Pos	Part Number	Turkish	English	German	Qty	R/P	From	Up To	Original Number Supplier
1	65119-90000-47Y	YOLCU KOLTUĞU- SET 47	PASSANGER SEAT- SET 47		SET		1		KİEL
1	65119-90000-49Y	YOLCU KOLTUĞU- SET 49	PASSANGER SEAT- SET 49		SET		1		KİEL
1	65119-90000-51Y	YOLCU KOLTUĞU- SET 51	PASSANGER SEAT- SET 51		SET		1		KİEL
1	65119-90000-53Y	YOLCU KOLTUĞU- SET 53	PASSANGER SEAT- SET 53		SET		1		KİEL
1	65119-90000-55Y	YOLCU KOLTUĞU- SET 55	PASSANGER SEAT- SET 55		SET		1		KİEL
1	65119-90010-55Y	YOLCU KOLTUĞU- SET 55	PASSANGER SEAT- SET 55		SET		1		KİEL
1	65119-90010-57Y	YOLCU KOLTUĞU- SET 57	PASSANGER SEAT- SET 57		SET		1		KİEL
1	65119-90010-59Y	YOLCU KOLTUĞU- SET 59	PASSANGER SEAT- SET 59		SET		1		KİEL
1	65119-90010-61Y	YOLCU KOLTUĞU- SET 61	PASSANGER SEAT- SET 61		SET		1		KİEL
1	65119-90010-63Y	YOLCU KOLTUĞU- SET 63	PASSANGER SEAT- SET 63		SET		1		KİEL
2	65119-90000-47Y	YOLCU KOLTUĞU- SET 47	PASSANGER SEAT- SET 47		SET		1		KİEL
2	65119-90000-49Y	YOLCU KOLTUĞU- SET 49	PASSANGER SEAT- SET 49		SET		1		KİEL
2	65119-90000-51Y	YOLCU KOLTUĞU- SET 51	PASSANGER SEAT- SET 51		SET		1		KİEL
2	65119-90000-53Y	YOLCU KOLTUĞU- SET 53	PASSANGER SEAT- SET 53		SET		1		KİEL
2	65119-90000-55Y	YOLCU KOLTUĞU- SET 55	PASSANGER SEAT- SET 55		SET		1		KİEL
2	65119-90000-57Y	YOLCU KOLTUĞU- SET 57	PASSANGER SEAT- SET 57		SET		1		KİEL
2	65119-90000-59Y	YOLCU KOLTUĞU- SET 59	PASSANGER SEAT- SET 59		SET		1		KİEL
2	65119-90000-61Y	YOLCU KOLTUĞU- SET 61	PASSANGER SEAT- SET 61		SET		1		KİEL
2	65119-90000-63Y	YOLCU KOLTUĞU- SET 63	PASSANGER SEAT- SET 63		SET		1		KİEL

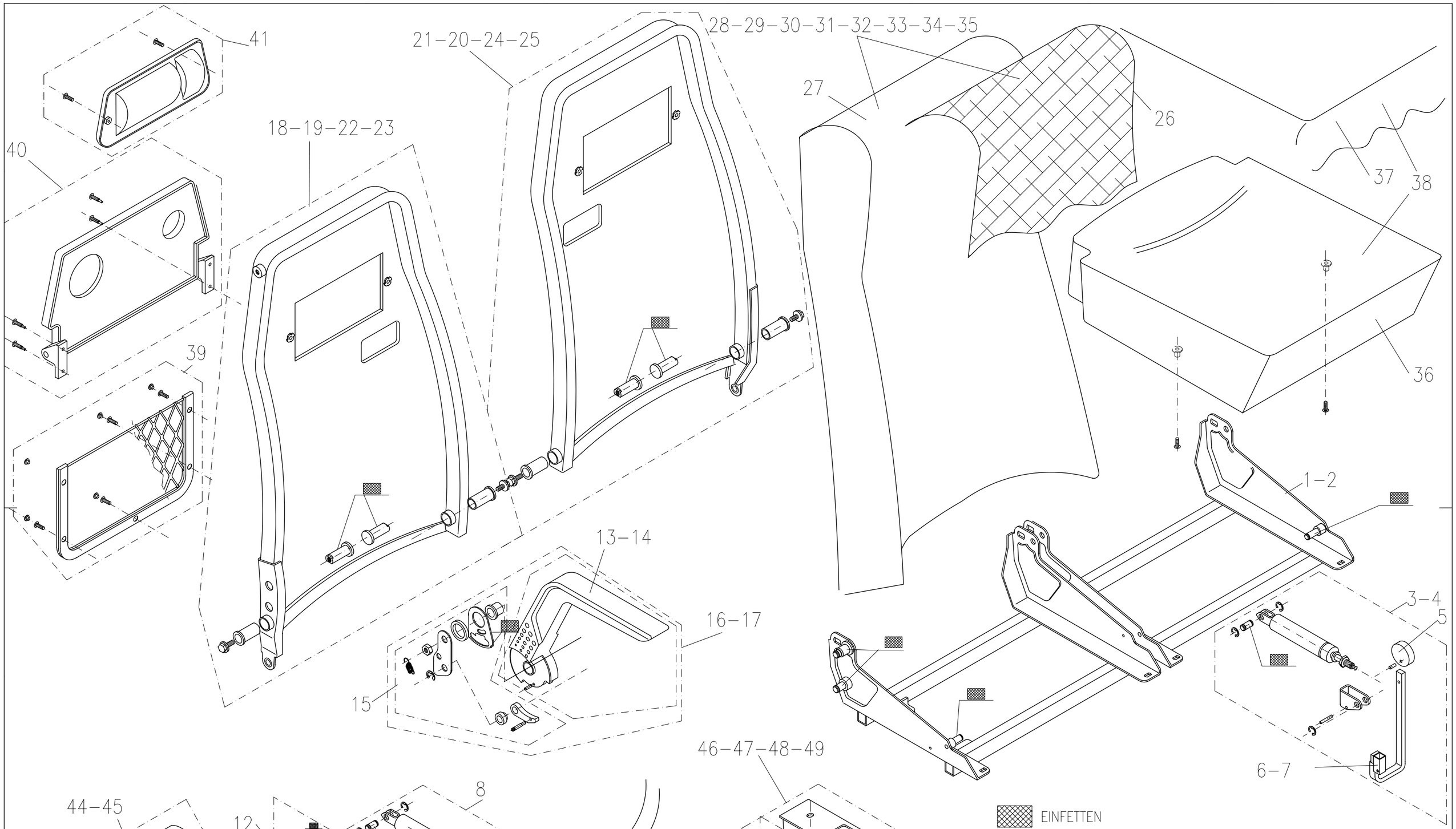

Specifications OVERLAND ÖZELLIKLERI					Customer MÜSTERI	RESIM SEKLI Y	ÖNEMLI FONKSIYONLAR/ KONTROL ÖLCÜSÜ	KRIT.KAR	AUTOCAD
					SERBEST ÖLCÜ TOLERANSI	Scale ÖLÇEK	ÖLÇÜLER ISO R 128	Material	MALZEME
						ÖLÇÜ mm		ÖLÇÜNORM DIN	
					2003 TARIH ISIM	Designation			ADI
					ÇIZEN 22. 01. CEVIK	PASSAGIERSITZE			
					ONAY 22. 01. NURKAYA	ERSATZTEILEZEICHNUNG			
					Norm				
PÜZ	Col. SÜTUN	Revision DEGISIKLIK	Date TARIH	Name ISIM	Appr. ONAY	KIEL A.S BURSA-TURKEY	Dr.Nr. 300	RESIM NO. 100	Page SAYFA 1 / 1 A 2

MODÜLER PARÇA LİSTESİ

ADET							PARÇA NO	POZ	PARÇA ADI	AÇIKLAMA
A	B	C	D	E	F	G				
2	2	2	2	2	2	2	300127.004	37	OTURAK KILIFI (EPENGLE 6224-96 TES 40453/69)	
2	2	2	2	2	2	2	300127.005	37	OTURAK KILIFI (EPENGLE 6224-96 TES 40453/69)	
2	2	2	2	2	2	2	300127.010	37	OTURAK KILIFI (EPENGLE 6230 R/283)	
2	2	2	2	2	2	2	300127.016	37	OTURAK KILIFI (EPENGLE 6224-96 TES 40453/69)	
2	2	2	2	2	2	2	300127.029	37	OTURAK KILIFI (SERVUS (LANTAL) 459/910)	
2	2	2	2	2	2	2	300127.032	37	OTURAK KILIFI (EPENGLE 6224-96 TES 40453/69)	
2	2	2	2	2	2	2	300127.058	37	OTURAK KILIFI (SERVUS (LANTAL) 459/910)	
2	2	2	2	2	2	2	300127.059	37	OTURAK KILIFI (EPENGLE V900 M19)	
2	2	2	2	2	2	2	300127.076	37	OTURAK KILIFI (EPENGLE 6224-96 TES 40453/69)	
2	2	2	2	2	2	2	300127.004	37	OTURAK KILIFI (EPENGLE 6224-96 TES 40453/69)	
2	2	2	2	2	2	2	300127.005	37	OTURAK KILIFI (EPENGLE 6224-96 TES 40453/69)	
2	2	2	2	2	2	2	300127.010	37	OTURAK KILIFI (EPENGLE 6230 R/283)	
2	2	2	2	2	2	2	300127.016	37	OTURAK KILIFI (EPENGLE 6224-96 TES 40453/69)	
2	2	2	2	2	2	2	300127.029	37	OTURAK KILIFI (SERVUS (LANTAL) 459/910)	
2	2	2	2	2	2	2	300127.032	37	OTURAK KILIFI (EPENGLE 6224-96 TES 40453/69)	
2	2	2	2	2	2	2	300127.058	37	OTURAK KILIFI (SERVUS (LANTAL) 459/910)	
2	2	2	2	2	2	2	300127.059	37	OTURAK KILIFI (EPENGLE V900 M19)	
2	2	2	2	2	2	2	300127.076	37	OTURAK KILIFI (EPENGLE 6224-96 TES 40453/69)	
2	2	2	2	2	2	2	300128	38	OTURAK DÖŞEMELİ	
2	2	2	2	2	2		300 129	39	FİLE GRİ	
2	2	2	2	2	2		300 130	40	TABLET GRİ	
2	2	2	2	2	2		300 131	41	ASKILIK TUTAMAK TAKIMI GRİ	
2	2	2	2	2	2	2	300 132	42	EMNİYET KEMERİ PROTEKTOR	
1	1	1	1	1	1	1	300 040	43	LOGO KİEL	
1		1	1				300 133	44	YAN KAPAK GRUBU SAĞ	
	1			1	1	1	300 134	45	YAN KAPAK GRUBU SOL	
1		1					300 135	46	AYAK KPL SAĞ L=252	
	1			1		1	300 009	47	AYAK KPL SOL L=252	
			1				300 136	48	AYAK KPL SAĞ L=202	
					1		300 137	49	AYAK KPL SOL L=202	

									SAYFA
					TEMSA				2 / 2
						AÇIKLAMA		İSİM	TARİH
					A	Y100 146 SOL			
					B	Y100 147 SAĞ	HAZIR	ÇEVİK	24.01.2003
					C	Y100 148 SOL	ONAY	NURKAYA	24.01.2003
					D	Y100 149 SOL	ADI		
					E	Y100 150 SAĞ			
a	N.M	R.N	08.08.03	RD-137-03	F	Y100 151 SAĞ	İKİLİ YOLCU KOLTUGU OVERLAND (YEDEK PARÇA)		300 100
Ind.	İsim	Ona	Tarih	Değişiklik	G	Y100 152 SAĞ			

MODÜLER PARÇA LİSTESİ

ADET							PARÇA NO	POZ	PARÇA ADI	AÇIKLAMA
A	B	C	D	E	F	G				
1		1	1				300 101	1	ŞASİ SOL	
	1			1	1	1	300 102	2	ŞASİ SAĞ	
1		1	1				300 103	3	ARKALIK YATIRMA TERTİBATI SOL (PENCERE)	
	1			1	1	1	300 104	4	ARKALIK YATIRMA TERTİBATI SAĞ (PENCERE)	
1	1	1	1	1	1	1	300 105	5	PLASTİK TOPUZ	
1		1	1				300 106	6	AÇMA KOLU PENCERE TARAFI SOL	
	1			1	1	1	300 107	7	AÇMA KOLU PENCERE TARAFI SAĞ	
2	2	2	2	2	2	2	300 015	8	GAZLI PİSTON STABILUS	
1	1	1	1	1	1	1	300 016	9	PİSTON BASKI GRUBU	
1		1	1				300 017	10	PİSTON TAHRİK PARÇASI SOL	
	1			1	1	1	300 018	11	PİSTON TAHRİK PARÇASI SAĞ	
1	1	1	1	1	1	1	300 019	12	BUTON GRUBU	
1		1	1				300 020	13	KOLÇAK SAĞ	
	1			1	1	1	300 021	14	KOLÇAK SOL	
1	1	1	1	1	1	1	300 022	15	KOLÇAK TAHRİK KİTİ	
1		1	1				300 023	16	KOLÇAK GRUBU SAĞ	
	1			1	1	1	300 024	17	KOLÇAK GRUBU SOL	
1			1				300 108	18	ARKALIK İSKELETİ TAHTALI SAĞ KORİDOR BURÇLU	
	1				1	1	300 109	19	ARKALIK İSKELETİ TAHTALI SOL KORİDOR BURÇLU	
	1				1	1	300 110	20	ARKALIK İSKELETİ TAHTALI SAĞ PENCERE	
1			1				300 111	21	ARKALIK İSKELETİ TAHTALI SOL PENCERE	
		1					300 112	22	ARKALIK İSKELETİ TAHTALI SAĞ KORİDOR BURÇLU TAKVİYELİ	
				1			300 113	23	ARKALIK İSKELETİ TAHTALI SOL KORİDOR BURÇLU TAKVİYELİ	
		1					300 114	24	ARKALIK İSKELETİ TAHTALI SOL PENCERE TAKVİYELİ	
				1			300 115	25	ARKALIK İSKELETİ TAHTALI SAĞ PENCERE TAKVİYELİ	
2	2	2	2	2	2	2	300 116	26	ARKALIK SÜNGERİ	
2	2	2	2	2	2	2	300117.004	27	ARKALIK KILIFI (EPENGLE 6224-96 TES 40453/69)	
2	2	2	2	2	2	2	300117.005	27	ARKALIK KILIFI (EPENGLE 6224-96 TES 40453/69)	
2	2	2	2	2	2	2	300117.010	27	ARKALIK KILIFI (EPENGLE 6230 R/283)	
2	2	2	2	2	2	2	300117.016	27	ARKALIK KILIFI (EPENGLE 6224-96 TES 40453/69)	
2	2	2	2	2	2	2	300117.029	27	ARKALIK KILIFI (SERVUS (LANTAL) 459/910)	
2	2	2	2	2	2	2	300117.032	27	ARKALIK KILIFI (EPENGLE 6224-96 TES 40453/69)	
2	2	2	2	2	2	2	300117.058	27	ARKALIK KILIFI (SERVUS (LANTAL) 459/910)	
2	2	2	2	2	2	2	300117.059	27	ARKALIK KILIFI (EPENGLE V900 M19)	
2	2	2	2	2	2	2	300117.076	27	ARKALIK KILIFI (EPENGLE 6224-96 TES 40453/69)	
1			1				300 118	28	ARKALIK SÜNGERİ SAĞ KORİDOR BURÇLU	
	1				1	1	300 119	29	ARKALIK SÜNGERİ SOL KORİDOR BURÇLU	
	1				1	1	300 120	30	ARKALIK SÜNGERİ SAĞ PENCERE	
1			1				300 121	31	ARKALIK SÜNGERİ SOL PENCERE	
		1					300 122	32	ARKALIK SÜNGERİ SAĞ KORİDOR BURÇLU TAKVİYELİ	
				1			300 123	33	ARKALIK SÜNGERİ SOL KORİDOR BURÇLU TAKVİYELİ	
		1					300 124	34	ARKALIK SÜNGERİ SOL PENCERE TAKVİYELİ	
				1			300 125	35	ARKALIK SÜNGERİ SAĞ PENCERE TAKVİYELİ	
2	2	2	2	2	2	2	300 126	36	OTURAK SÜNGERİ	

					OVERLAND-KIZAKSIZ		SAYFA
					TEMSA		1 / 2
					AÇIKLAMA	İSİM	TARİH
				A	Y100 146 SOL		
				B	Y100 147 SAĞ	HAZIR: ÇEVİK	24.01.2003
				C	Y100 148 SOL	ONAY: NURKAYA	24.01.2003
				D	Y100 149 SOL	ADI	
				E	Y100 150 SAĞ		
a	N.M	R.N	08.08.03	F	Y100 151 SAĞ	IKILI YOLCU KOLTUGU OVERLAND (YEDEK PARÇA)	300 100
Ind.	İsim	Ona	Tarih	G	Y100 152 SAĞ		
				RD-137-03	Değişiklik		

SPARE PARTS LIST

QUANTITY A	B	C	D	E	F	G	PART NO	POS.	PART NAME	DEFINITION
1		1	1				300 101	1	METAL FRAME LEFT	
	1			1	1	1	300 102	2	METAL FRAME RIGHT	
1		1	1				300 103	3	BACKREST MECHANISM LEFT (WINDOW SIDE)	
	1			1	1	1	300 104	4	BACKREST MECHANISM RIGHT (WINDOW SIDE)	
1	1	1	1	1	1	1	300 105	5	PLASTIC KNOB	
1		1	1				300 106	6	BACKREST MECHANISM ARM, WINDOW SIDE LEFT	
	1			1	1	1	300 107	7	BACKREST MECHANISM ARM, WINDOW SIDE RIGHT	
2	2	2	2	2	2	2	300 015	8	GAS SPRING STABILUS	
1	1	1	1	1	1	1	300 016	9	GAS SPRING ,METAL PARTS	
1		1	1				300 017	10	GAS SPRING METAL DRIVE PART LEFT	
	1			1	1	1	300 018	11	GAS SPRING METAL DRIVE PART RIGHT	
1	1	1	1	1	1	1	300 019	12	BUTON GROUP	
1		1	1				300 020	13	ARMREST RIGHT	
	1			1	1	1	300 021	14	ARMREST LEFT	
1	1	1	1	1	1	1	300 022	15	ARMREST MECHANISM GROUP	
1		1	1				300 023	16	ARMREST GROUP RIGHT	
	1			1	1	1	300 024	17	ARMREST GROUP LEFT	
1			1				300 108	18	BACKREST FRAME WITH WOODEN PLATE, HANDLE-BUSH ON CORRIDOR SIDE, RIGHT	
	1				1	1	300 109	19	BACKREST FRAME WITH WOODEN PLATE, HANDLE- BUSH ON CORRIDOR SIDE, LEFT	
	1				1	1	300 110	20	BACKREST FRAME WITH WOODEN PLATE,WINDOW SIDE RIGHT	
1			1				300 111	21	BACKREST FRAME WITH WOODEN PLATE,WINDOW SIDE LEFT	
		1					300 112	22	BACKREST FRAME WITH WOODEN PLATE, BUSH ON CORRIDOR SIDE, REINFORCED , RIGHT	
				1			300 113	23	BACKREST FRAME WITH WOODEN PLATE, BUSH ON CORRIDOR SIDE, REINFORCED , LEFT	
		1					300 114	24	BACKREST FRAME WITH WOODEN PLATE, , REINFORCED , LEFT WINDOW SIDE	
				1			300 115	25	BACKREST FRAME WITH WOODEN PLATE, , REINFORCED , RIGHT WINDOW SIDE	
2	2	2	2	2	2	2	300 116	26	BACKREST FOAM	
2	2	2	2	2	2	2	300 117	27	BACKREST UPHOLSTERY	
1			1				300 118	28	BACKREST FOAM, BUSH ON CORRIDOR SIDE ,RIGHT	
	1				1	1	300 119	29	BACKREST FOAM, BUSH ON CORRIDOR SIDE ,LEFT	
	1				1	1	300 120	30	BACKREST FOAM, WINDOW SIDE RIGHT	
1			1				300 121	31	BACKREST FOAM, WINDOW SIDE LEFT	
		1					300 122	32	BACKREST FOAM, HANDLE-BUSH ON CORRIDOR SIDE ,REINFORCED , RIGHT	
				1			300 123	33	BACKREST FOAM, HANDLE-BUSH ON CORRIDOR SIDE ,REINFORCED , LEFT	
		1					300 124	34	BACKREST FOAM, WINDOW SIDE , REINFORCED, LEFT	
				1			300 125	35	BACKREST FOAM, WINDOW SIDE , REINFORCED, RIGHT	
2	2	2	2	2	2	2	300 126	36	CUSHION FOAM	
2	2	2	2	2	2	2	300 127	37	CUSHION UPHOLSTERY	
2	2	2	2	2	2	2	300 128	38	CUSHION WITH UPHOLSTERY	
2	2	2	2	2	2		300 129	39	MAGAZINE NET GREY	
2	2	2	2	2	2		300 130	40	SERVICE TABLE GREY	
2	2	2	2	2	2		300 131	41	HOOK-HANDLE SET, GREY	
2	2	2	2	2	2	2	300 132	42	SAFETY BELT , PROTECTOR	
1	1	1	1	1	1	1	300 040	43	LOGO KİEL	
1		1	1				300 133	44	SIDE COVER GROUP RIGHT	
	1			1	1	1	300 134	45	SIDE COVER GROUP LEFT	
1		1					300 135	46	FOOT RIGHT L=252	
	2			2		2	300 009	47	FOOT LEFT L=252	
			1				300 136	48	FOOT RIGHT L=202	
					1		300 137	49	FOOT LEFT L=202	

TEMSA				PAGE 1 / 1
DEFINITION			NAME	DATE
A	Y100 146 LEFT			
B	Y100 147 RIGHT	PREPARED BY	ÇEVİK	24.01.2003
C	Y100 148 LEFT	APPROVED BY	NURKAYA	24.01.2003
D	Y100 149 LEFT	NAME		
E	Y100 150 RIGHT			
F	Y100 151 RIGHT	DOUBLE PASSENGER SEAT, OVERLAND (SPARE PARTS)		300 100
G	Y100 152 RIGHT			

Ind.	name	approved by	date	revision

TEMSA	Sürücü koltuğu Drivers seat Fahrersitz	Group No : 25-020 Draw. Num. : x Rev. Date : Page : 1
	Vehicle Model: TB162X, TB162Y, TB163X, TB163Y	

ISRI 6860/875

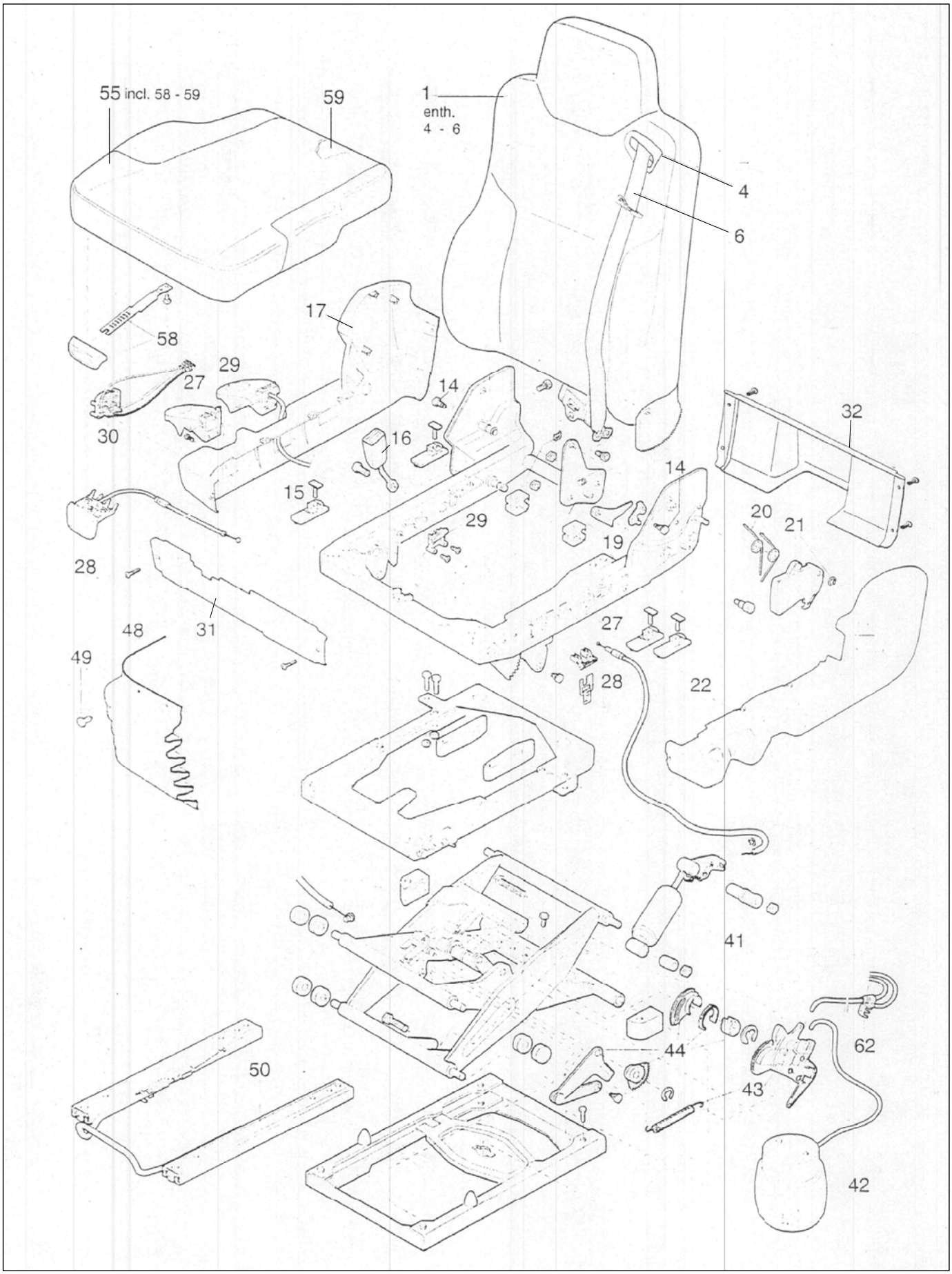

TEMSA	Sürücü koltuğu Drivers seat Fahrersitz	Drw.no: Vehicle Model: **TB162X, TB162Y** **TB163X, TB163Y**	**25-020** RevDate: Page: 1

Pos	Part Number	Turkish	English	German	Qty	R/P	From	Up To	Original Number Supplier
*	6860/875	SÜRÜCÜ KOLTUĞU	DRIVERS SEAT COMPLETE	FAHRER SITZ	1		1		ISRI
*	65161-94017-11Y	SÜRÜCÜ KOLTUĞU	DRIVERS SEAT COMPLETE	FAHRER SITZ	1		1		Temsa part number
1	010037-01	ARKALIK EMNİYET KEMERLİ DÖŞEMESİZ	BACKREST WITHSBELT FURNISHLESS	RUCKENTEIL KPL MIT GURT LI ohne bezung	1		1		010037-01 ISRI
4	929527-94	KEMER YÖNLENDİRİCİ SAĞ/SOL	SAFETY BELT GUIDE L/R	GURTFUHRUNG LI/RE	1		1		929527-94 ISRI
6	929527-23	3NOKTA EMNİYET KEMERİ SOL		3PUNKT GURT LI	1		1		929527-23 ISRI
14	929527-62	ARKALIK BAĞLANTI CIVATASI		SCHRAUBEN FUR RUCKENLEHNE	1		1		929527-62 ISRI
15	914516-04	OTURAK KAYICI PLASTİĞİ		GLEITER FUR SITZKISSEN	1		1		914516-04 ISRI
16	929527-21	EMNİYET KEMERİ KİLİDİ	LOCK, SAFETY BELT	GURTSCHLOSS					
17	929527-89	YAN KAPAK SAĞ	SIDE COVER RH	SEITENABDECKUNG RE					
19	929527-11	ARKALIK AYAR PARÇALARI SOL	BACKREST ADJUSTMENT LH	RUCKENLEHNENRASTUNG L					
21	929527-54	ARKALIK YATIRMA BUTONU	BACKREST TILT BUTTON	RUCKENLEHNENGRIFF					
22	929527-69	YAN KAPAK SOL	SIDE COVER LH	SEITENABDECKUNG LI					
27	929527-43	KADEMELİ AMORTİSÖR ÇEKME TELİ	WIRE PULL	VERSTELLEINHEIT DAEMPFER LI					

TEMSA	Sürücü koltuğu Drivers seat Fahrersitz	Group No : 25-021 Draw. Num. : x Rev. Date : Page : 1
	Vehicle Model: TB162W, TB162Z, TB163W, TB163Z,	

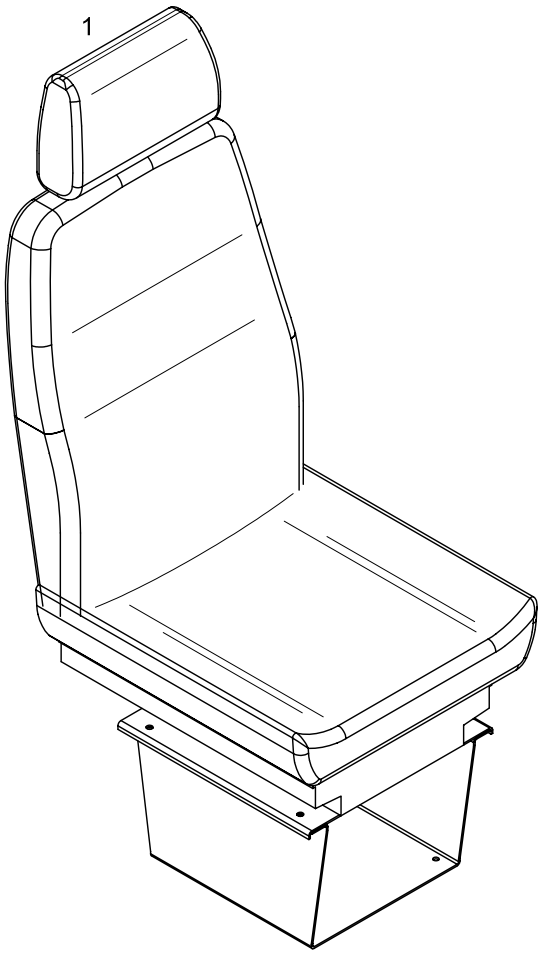

TEMSA	Sürücü koltuğu Drivers seat Fahrersitz	Drw.no: Vehicle Model: **TB162W, TB162Z** **TB163W, TB163Z**	**25-021** RevDate: Page: 1

Pos	Part Number	Turkish	English	German	Qty	R/P	From	Up To	Original Number Supplier
*	65161-90017-01Y	SÜRÜCÜ KOLTUĞU	DRIVERS SEAT COMPLETE	FAHRER SITZ	1		1		grammer

TEMSA	Hostes koltuğu Assistance Seat Reisebegleiter sitz	Group No : 25-030 Draw. Num. : x Rev. Date :
	Vehicle Model: TB162W, TB162Z, TB162X, TB162Y, TB163W, TB163Z, TB163X, TB163Y	Page : 1

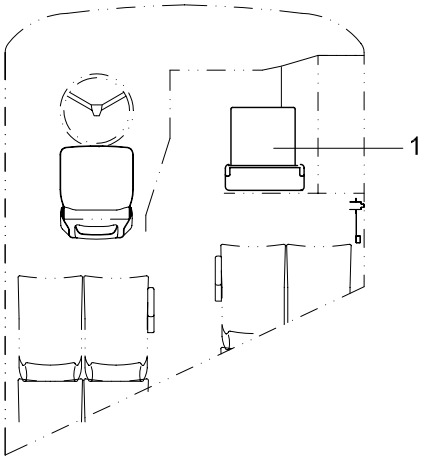

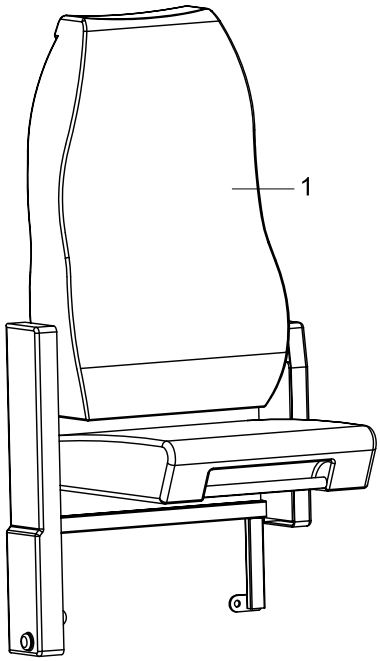

TEMSA	Hostes koltuğu Assistance seat	Drw.no: Vehicle Model: **TB162W, TB162Z, TB162X, TB162Y** **TB163W, TB163Z, TB163X, TB163Y**	**25-030** RevDate: Page: 1

Pos	Part Number	Turkish	English	German	Qty	R/P	From	Up To	Original Number Supplier
1	65119-90046-01Y	HOSTES KOLTUĞU	ASSISTANCE SEAT	REISEBEGLEITER SITZ					GRAMMER

TEMSA	Koltuk rayı - 30.09.2004 e kadar Seat rail - up to 2004'09.30	Group No : 25-040 Draw. Num. : x Rev. Date : Page : 1
	Vehicle Model: TB162W, TB163W,	

KOLTUK RAYI - SEAT RAIL

SAĞ İÇ YAN - INSIDE RH

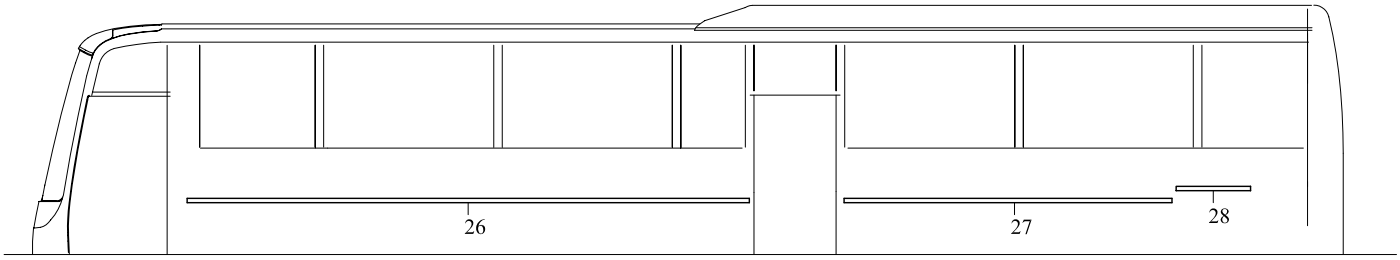

SOL İÇ YAN - INSIDE LH

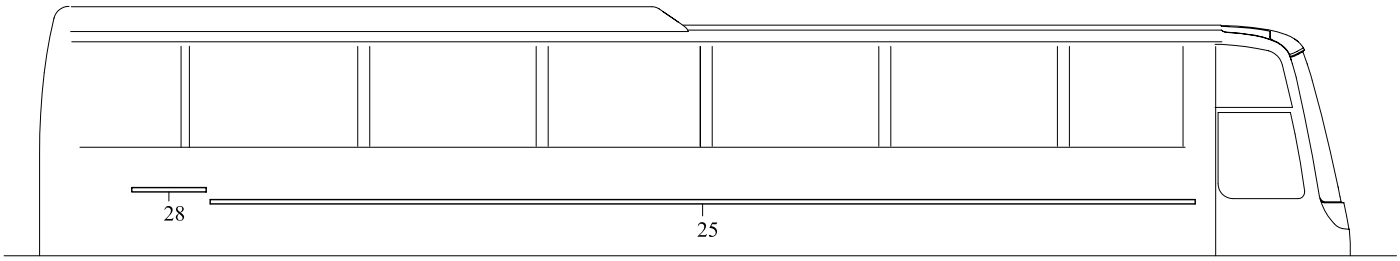

TABAN - FLOOR

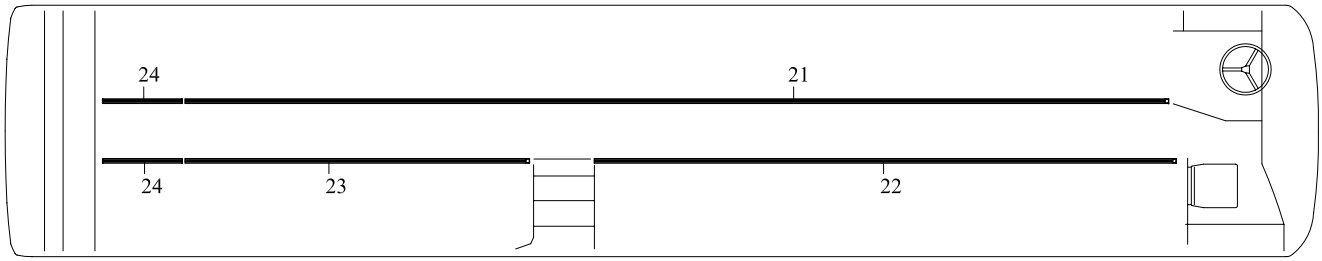

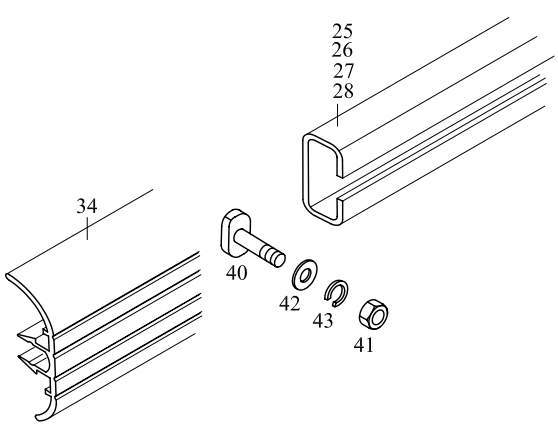

YAN DUVAR
SIDE WALL

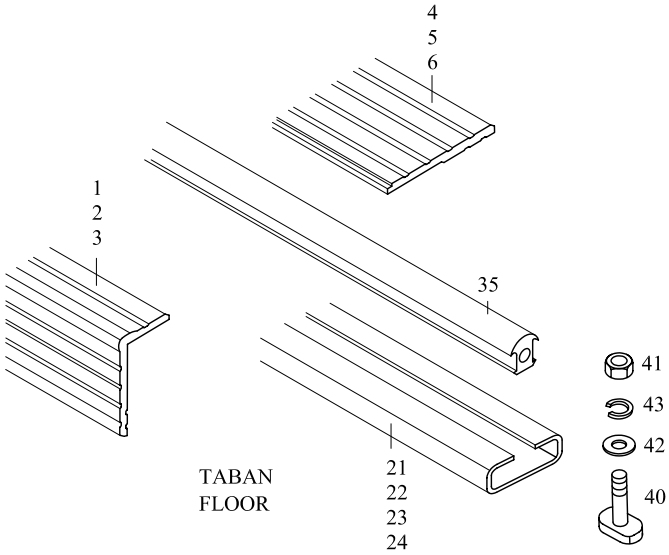

TABAN
FLOOR

KOLTUK RAYI FİTİLİ - MOULDING, SEAT RAIL

SOL - LH

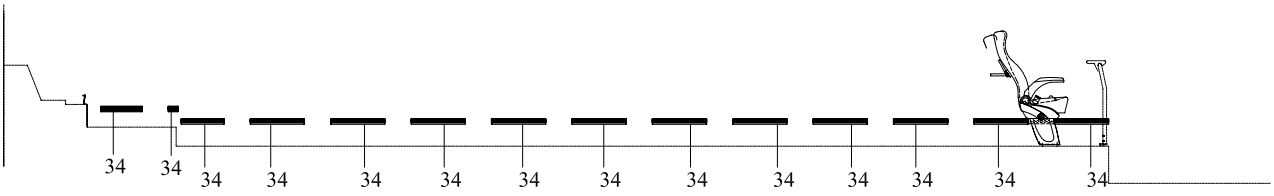

TABAN - FLOOR

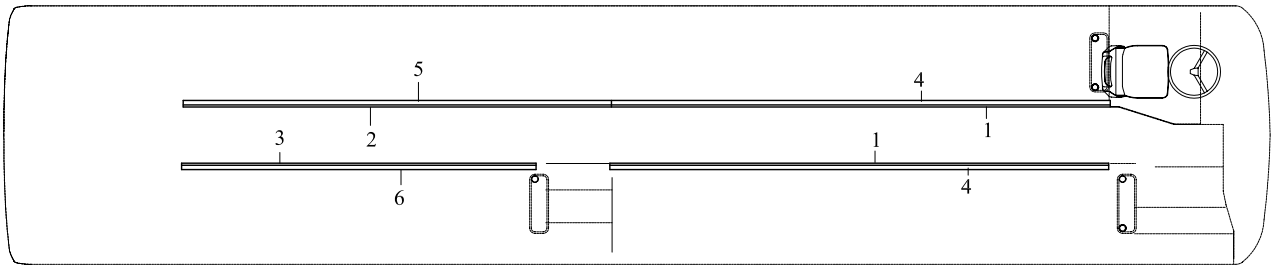

SAĞ - RH

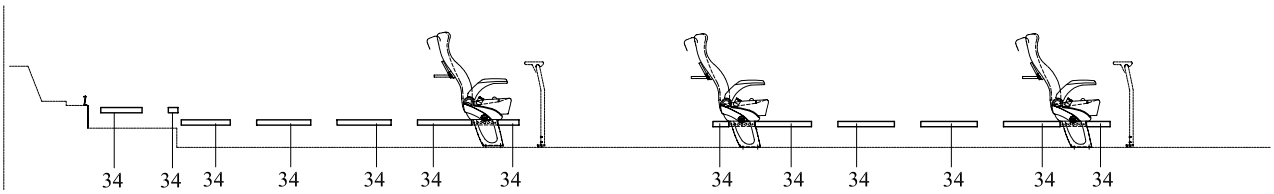

TEMSA	Koltuk rayı - 30.09.2004 e kadar Seat rail - up to 2004'09.30	Drw.no: Vehicle Model: **TB162W** **TB163W**	**25-040** RevDate: Page: 1

Pos	Part Number	Turkish	English	German	Qty	R/P	From	Up To	Original Number Supplier
1	65119-96026-01Y	KENAR ÇITASI	PLATE EDGE		2		1	300904	
2	65119-96026-02Y	KENAR ÇITASI	PLATE EDGE		1		1	300904	
3	65119-97026-03Y	KENAR ÇITASI	PLATE EDGE		1		1	300904	
4	65119-96036-01Y	KENAR ÇITASI	PLATE EDGE		2		1	300904	
5	65119-96036-02Y	KENAR ÇITASI	PLATE EDGE		1		1	300904	
6	65119-97036-03Y	KENAR ÇITASI	PLATE EDGE		1		1	300904	
21	TU296114Y	KOLTUK RAYI	SEAT RAIL		1		1		L:8785mm
22	TU296114Y	KOLTUK RAYI	SEAT RAIL		1		1		L:4872mm
23	TU296114Y	KOLTUK RAYI	SEAT RAIL		1		1		L:3355mm
24	TU296114Y	KOLTUK RAYI	SEAT RAIL		2		1		L:775mm
25	TU296114Y	KOLTUK RAYI	SEAT RAIL		1		1		L:8565mm
26	TU296114Y	KOLTUK RAYI	SEAT RAIL		2		1		L:4680mm
27	TU296114Y	KOLTUK RAYI	SEAT RAIL		4		1		L:3126mm
28	TU296114Y	KOLTUK RAYI	SEAT RAIL		1		1		L:725mm
34	TU290121-01Y	FİTİL	MOULDING		AR		1		
35	65119-90029-01Y	KOLTUK RAYI FİTİLİ	MOULDING, SEAT RAIL		AR		1		
40	TU290160Y	T-CIVATA	BOLT-T		AR		1		
41	MF430006Y	SOMUN	NUT		AR		1		
42	MF450155Y	PUL	WASHER PLAIN		AR		1		
43	MF450406Y	RONDELA	WASHER SPRING		AR		1		

TEMSA	Koltuk rayı - 30.09.2004 e kadar Seat rail - up to 2004'09.30	Group No : 25-041 Draw. Num. : x Rev. Date :
	Vehicle Model: TB162Z, TB163Z,	Page : 1

KOLTUK RAYI - SEAT RAIL

SOL - LH

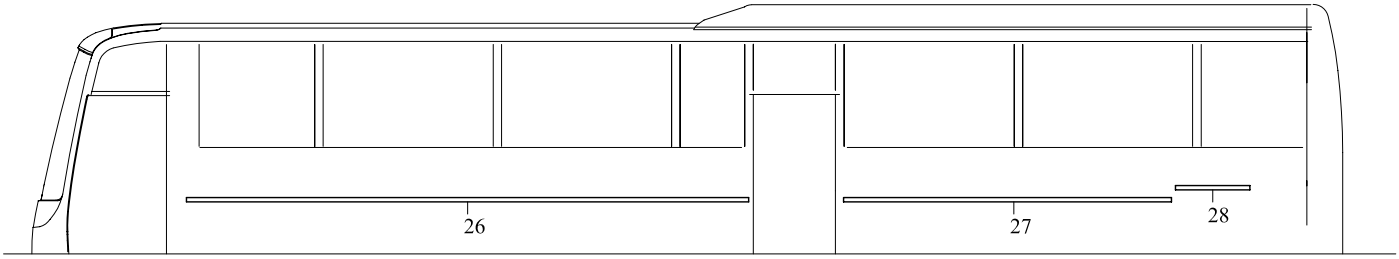

SAĞ - RH

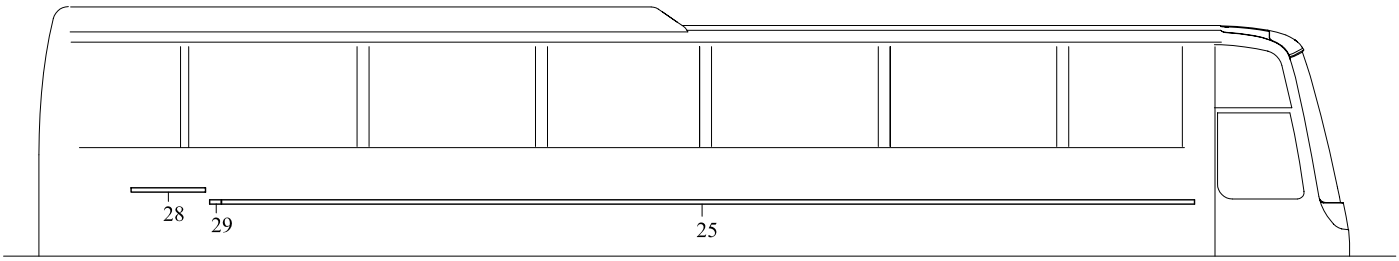

TABAN - FLOOR

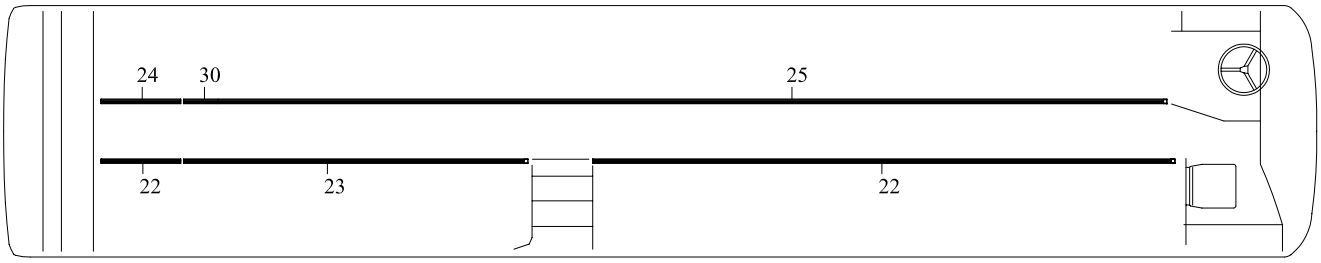

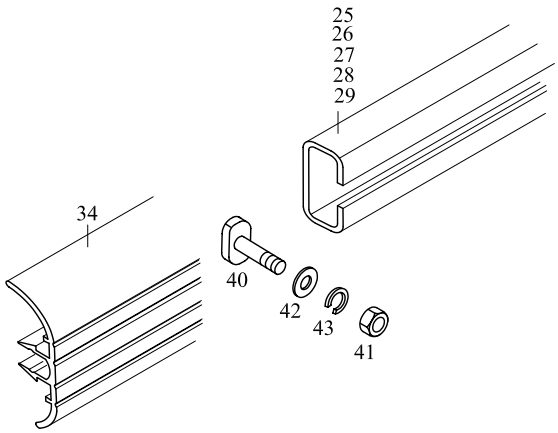

YAN DUVAR
SIDE WALL

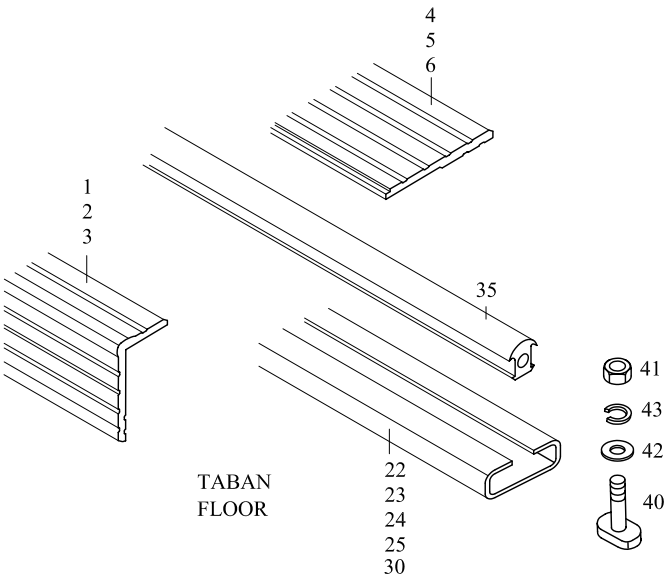

TABAN
FLOOR

TEMSA	Koltuk rayı - 30.09.2004 e kadar Seat rail - up to 2004'09.30	Drw.no: Vehicle Model: **TB162Z** **TB163Z**	**25-041** RevDate: Page: 1

Pos	Part Number	Turkish	English	German	Qty	R/P	From	Up To	Original Number Supplier
1	65119-97026-01Y	KENAR ÇITASI	PLATE EDGE		2		1	300904	
2	65119-97026-02Y	KENAR ÇITASI	PLATE EDGE		1		1	300904	
3	65119-97026-03Y	KENAR ÇITASI	PLATE EDGE		1		1	300904	
4	65119-97036-01Y	KENAR ÇITASI	PLATE EDGE		2		1	300904	
5	65119-97036-02Y	KENAR ÇITASI	PLATE EDGE		1		1	300904	
6	65119-97036-03Y	KENAR ÇITASI	PLATE EDGE		1		1	300904	
22	TU296114Y	KOLTUK RAYI	SEAT RAIL		1		1		L:5672mm
23	TU296114Y	KOLTUK RAYI	SEAT RAIL		1		1		L:3355mm
24	TU296114Y	KOLTUK RAYI	SEAT RAIL		2		1		L:775mm
25	TU296114Y	KOLTUK RAYI	SEAT RAIL		1		1		L:9250mm
26	TU296114Y	KOLTUK RAYI	SEAT RAIL		2		1		L:5480mm
27	TU296114Y	KOLTUK RAYI	SEAT RAIL		4		1		L:3126mm
28	TU296114Y	KOLTUK RAYI	SEAT RAIL		1		1		L:725mm
29	TU296114Y	KOLTUK RAYI	SEAT RAIL		1		1		L:115mm
30	TU296114Y	KOLTUK RAYI	SEAT RAIL		1		1		L:335mm
34	TU290121-01Y	FİTİL	MOULDING		AR		1		
35	65119-90029-01Y	KOLTUK RAYI FİTİLİ	MOULDING		AR		1		
40	TU290160Y	T-CIVATA	BOLT-T		AR		1		
41	MF430006Y	SOMUN	NUT		AR		1		
42	MF450155Y	PUL	WASHER PLAIN		AR		1		
43	MF450406Y	RONDELA	WASHER SPRING		AR		1		

TEMSA	Koltuk rayı - 30.09.2004 den sonra Seat rail - after 2004'09.30	Group No : 25-042 Draw. Num. : x Rev. Date : Page : 1
	Vehicle Model: TB162W, TB162Z, TB162X, TB162Y, TB163W, TB163Z, TB163X, TB163Y	

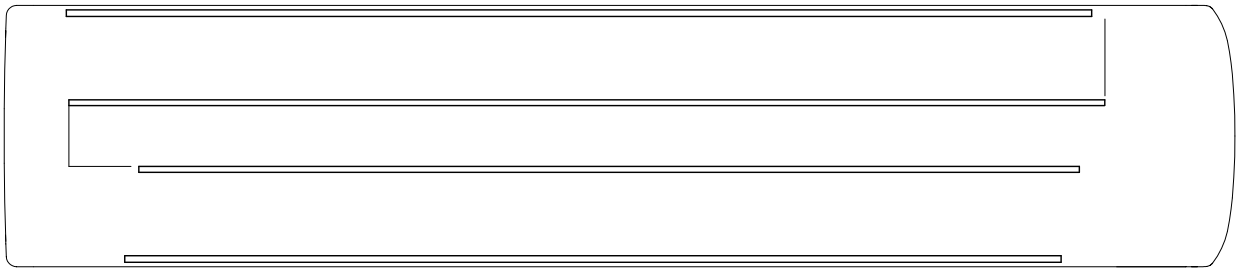

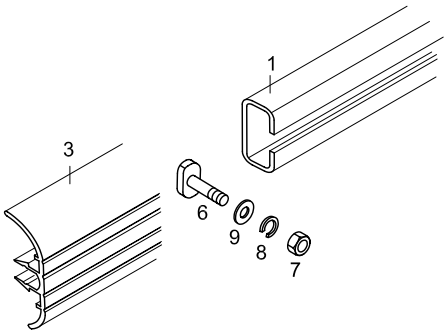

Yan duvar
Side wall

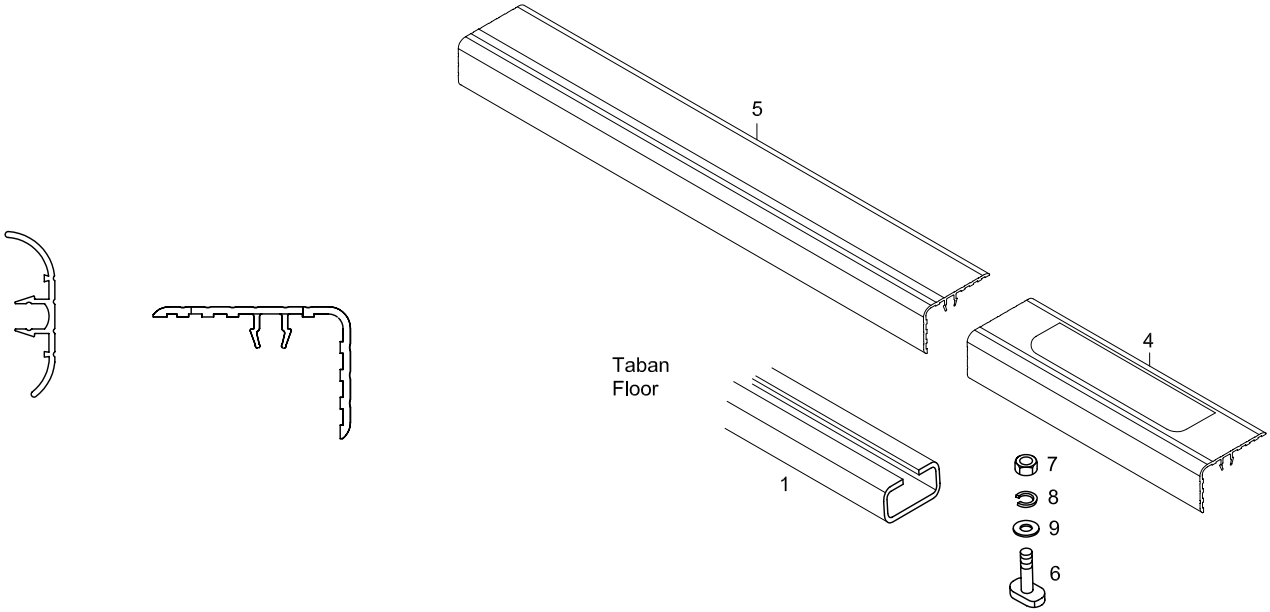

Taban
Floor

TEMSA	Koltuk rayı - 30.09.2004 den sonra Seat rail - after 2004'09.30	Drw.no: Vehicle Model: TB162W, TB162Z, TB162X, TB162Y TB163W, TB163Z, TB163X, TB163Y	25-042 RevDate: Page: 1

Pos	Part Number	Turkish	English	German	Qty	R/P	From	Up To	Original Number Supplier
1	TU296114Y	KOLTUK RAYI	SEAT RAIL		MT		1		t:4
3	TU296121-01Y	KOLTUK RAYI FİTİLİ	MOULDING SEAT RAIL		MT		1		
4	HD297107Y	KOLTUK RAYI FİTİLİ	MOULDING SEAT RAIL		25		1		
5	HD202117Y	KOLTUK RAYI FİTİLİ	MOULDING SEAT RAIL		MT		1		
6	TU290160Y	T-CIVATA M10*1.25	T-BOLT M10*1.25		100		1		
7	MF430122Y	SOMUN M10*1.25	NUT M10*1.25		100		1		
8	MF450406PY	RONDELA 10.5	WASHER SPRING		110		1		
9	MF450155PY	PUL	WASHER PLAIN		110		1		

26 LAMBALAR, GÖSTERGELER VE SİVİÇLER
LIGHTS, INSTRUMENT & SWITCHES
x

26-010	Ön lambalar Front Lamps x	TB162W TB163W	TB162Z TB163Z	TB162X TB163X	TB162Y TB163Y
26-020	Arka lambalar Rear Lamps x	TB162W TB163W	TB162Z TB163Z	TB162X TB163X	TB162Y TB163Y
26-030	Bagaj,koridor,basamak, motor odası ve yan lambalar Trunk room, step, aisle and side lamps x	TB162W TB163W	TB162Z TB163Z	TB162X TB163X	TB162Y TB163Y
26-040	Multiset sistem Multiset system x	TB162W TB163W	TB162Z TB163Z	TB162X TB163X	TB162Y TB163Y
26-050	Ön kumanda siviçleri - 15.05.2004 e kadar Front switches - up to 2004' 05.15 x	TB162W TB163W	TB162Z TB163Z		
26-051	Ön kumanda siviçleri - 15.05.2004 den sonra Front switches - after 2004' 05.15 x	TB162W TB163W	TB162Z TB163Z		
26-052	Ön kumanda siviçleri Front switches x			TB162X TB163X	TB162Y TB163Y
26-060	Yan kumanda kutusu- 15.05.2004 e kada Side switch box - up to 2004' 05.15 x	TB162W TB163W	TB162Z TB163Z		
26-061	Yan kumanda kutusu - 15.05.2004 den sonra Side switch box - after 2004' 05.15 x	TB162W TB163W	TB162Z TB163Z		
26-062	Yan kumanda kutusu Side switch box x			TB162X TB163X	TB162Y TB163Y
26-070	Ön kumanda paneli trimi Dashboard and front lower trim Trimm, Vordere Steuerungspaneele	TB162W TB163W	TB162Z TB163Z	TB162X TB163X	TB162Y TB163Y

TEMSA	Ön lambalar Front Lamps	Group No : 26-010 Draw. Num. : x Rev. Date : Page : 1
	Vehicle Model: TB162W, TB162Z, TB162X, TB162Y, TB163W, TB163Z, TB163X, TB163Y	

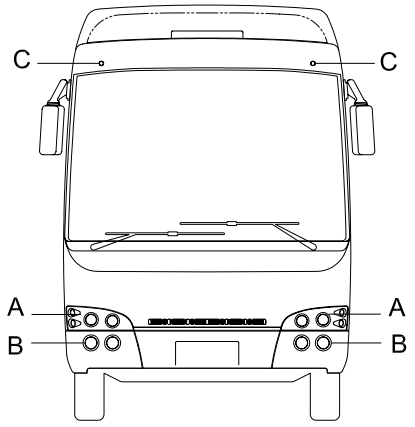

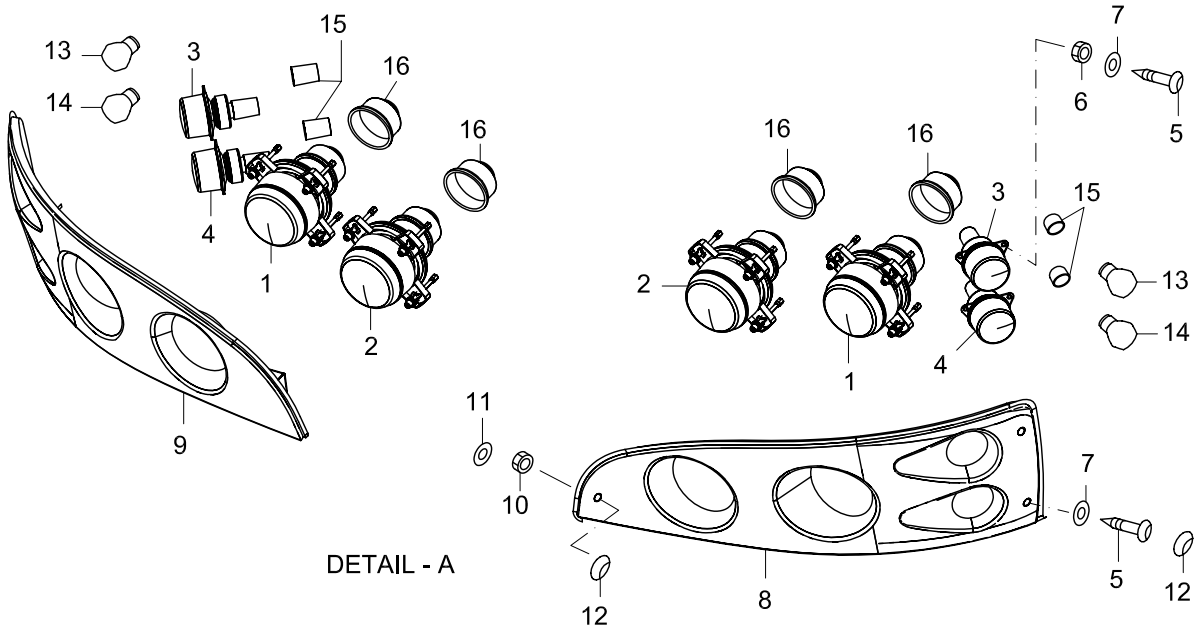

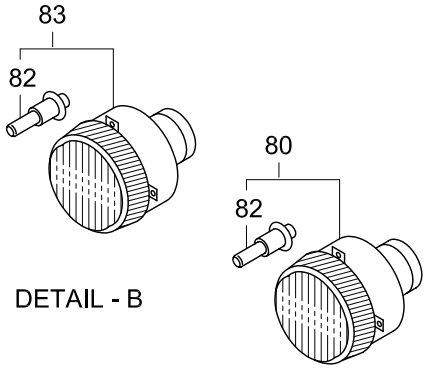

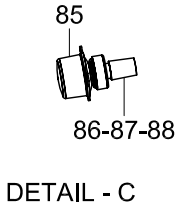

TEMSA	Ön lambalar Front lamp	Drw.no : TC299548-052 Vehicle Model: **TB162W, TB162Z, TB162X, TB162Y** **TB163W, TB163Z, TB163X, TB163Y**	**26-010** RevDate: Page: 1

Pos	Part Number	Turkish	English	German	Qty	R/P	From	Up To	Original Number Supplier
1	TC852102	KISA FAR	DIPPED BEAM HEADLAMP		2		1		1BL 008 193-017 HELLA
2	TC852101	UZUN FAR	MAIN BEAM HEADLAMP		2		1		1KO 008 191-047 HELLA
3	TC852103	ÖN SİNYAL LAMBASI	FLASHER LAMP FRONT		2		1		2BA 008 221-007 HELLA
4	TC852104	POZİSYON LAMBASI	POSITION LAMP		2		1		2PF 008 221-017 HELLA
5	MF200053Y	VİDA	SCREW MACHINE		AR		1		5*16
6	MF430003Y	SOMUN	NUT		AR		1		M5
7	MF450403Y	RONDELA	WASHER SPRING		AR		1		5
8	TC299548-266Y	KAPAK SOL	COVER SOL		1		1		
9	TC299548-267Y	KAPAK SAĞ	COVER RH		1		1		
10	MF430004Y	SOMUN	NUT		AR		1		M6
11	MF450004Y	PUL	WASHER PLAIN		AR		1		A6.4
12	TC299640-30Y	TAPA	PLUG		4		1		
13	TC852113	AMPUL TURUNCU	BULB 21W YELLOW		2		1		8GA 006 841-241 HELLA
14	64131-61000-18Y	AMPUL (24V-5W)	BULB (24V-5W)		2		1		
15	TC852111	GROMET	LEAD CABLE		4		1		8KA 152 134-007 HELLA
16	TC852110	GROMET	REAR COVER CAP		4		1		9GH 152 654-007 HELLA
80	TC299548-144Y	ÖN SİS LAMBASI	LAMP ASSY FOG		2		1		FARBA
82	230220	AMPUL	BULB		2		1		
83	TC299548-145Y	SİS LAMBASI	FOG LAMP		2		1		FARBA
85	TC852112	ÖN TEPE LAMBASI	MARKER LAMP FR		2		1		2PF 003 563-151 HELLA
86	TC852115Y	AMPUL (24V-3W)	BULB (24V-3W)		2		1		
87	64426-60010-03Y	SOKET	SOCKET		2		1		
88	TH992102Y	TERMİNAL	TERMINAL		4		1		

TEMSA	Arka lambalar Rear lamps	Group No : 26-020 Draw. Num. : x Rev. Date : Page : 1
	Vehicle Model: TB162W, TB162Z, TB162X, TB162Y, TB163W, TB163Z, TB163X, TB163Y	

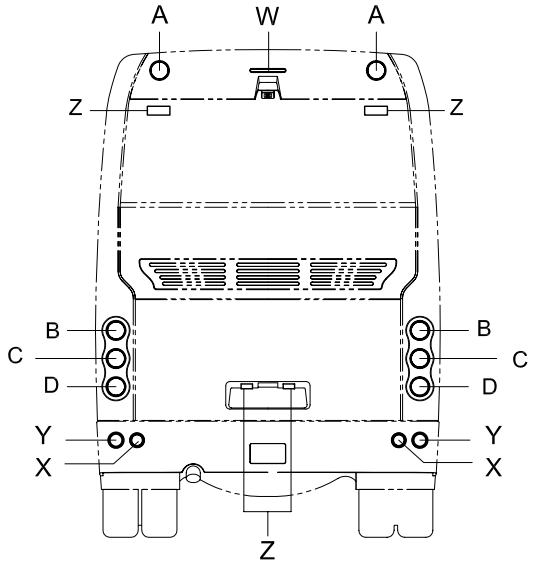

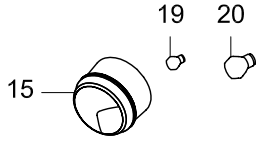

DETAIL - A

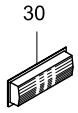

DETAIL - Z

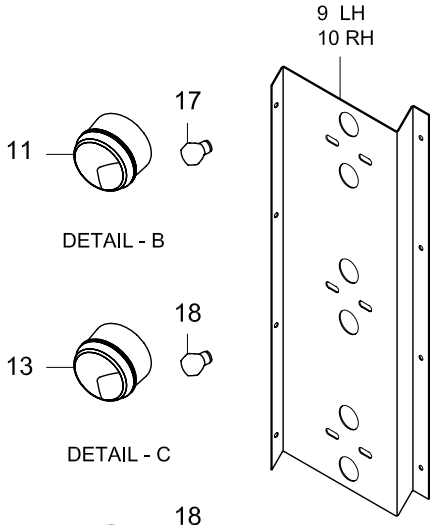

DETAIL - B

DETAIL - C

DETAIL - D

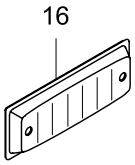

DETAIL - W

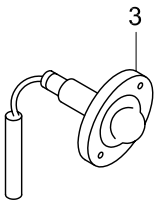

DETAIL - Z

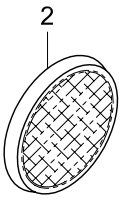

DETAIL - Y

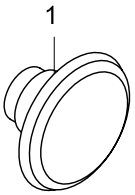

DETAIL - X

TEMSA	Arka lambalar Rear lamps	Drw.no 64194-90010-70/62204-90230-70/61802-90230-70 Vehicle Model: **TB162W, TB162Z, TB162X, TB162Y** **TB163W, TB163Z, TB163X, TB163Y**	**26-020** RevDate: Page: 1

Pos	Part Number	Turkish	English	German	Qty	R/P	From	Up To	Original Number Supplier
1	61802-80030-22	GERİ GİDİŞ LAMBASI	BACK LAMP		2		1	280504	306BTF ARCOLSA
1	TY252100Y	GERİ GİDİŞ LAMBASI	BACK LAMP		2		280504		
2	61802-80030-23	REFLEKTÖR	REFLECTOR (RED)		2		1		8RA 002 016-121 HELLA
3	TM252134	PLAKA LAMBASI	LICENCE LAMP		2		1		2KA 005 049-017
9	64194-90100-01X	PANEL SOL	PANEL LH		1		1		
10	64194-90100-02X	PANEL SAĞ	PANEL RH		1		1		
11	TC852108	ARKA POZİSYON LAMBASI	TAIL/BREAK LAMP		2		1		2TA 964 169-061 HELLA
13	TC852105	ARKA SİNYAL LAMBASI	FLASHER LAMP REAR		2		1		2BA 964 169-011 HELLA
14	TC852107	ARKA SİS LAMBASI	REAR FOG LAMP		2		1		2NE 964 169-021 HELLA
15	TC852106	ARKA TEPE LAMBASI	TAIL/FLASHER LAMP		2		1		2SW 964 169-081 HELLA
16	TU252136	STOP LAMBASI	SAFETY BRAKE LAMP		1		1		2DA 959 071-737 HELLA
17	MF820364Y	AMPUL (24V-21W/5W)	BULB (24V-21W/5W)		2		1		
18	MF820336Y	AMPUL (24V-25W)	BULB (24V-25W)		4		1		
19	64131-61000-18Y	AMPUL (24V-5W)	BULB (24V-5W)		2		1		
20	MF820185Y	AMPUL	BULB		2		1		
30	TC852116	SİNYAL LAMBASI	SGINAL LAMP		2		1		

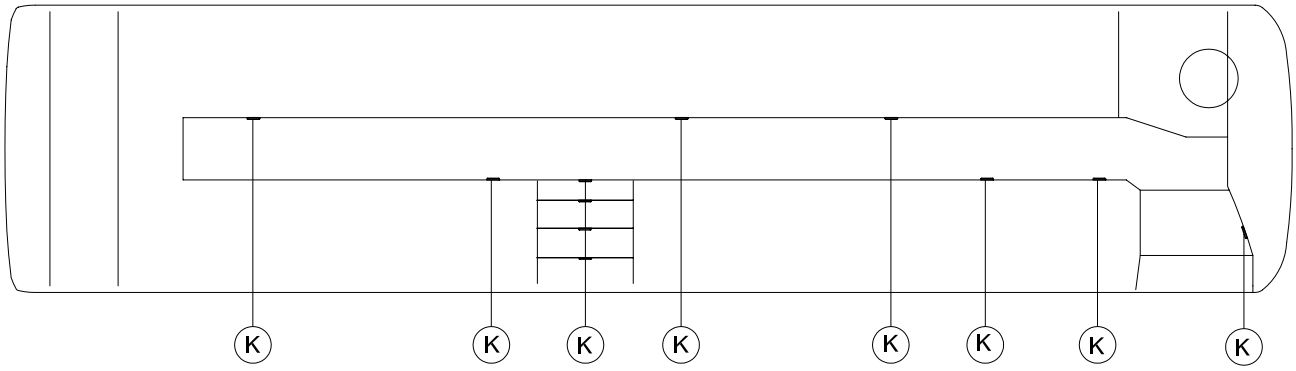

KORİDOR
AISLE

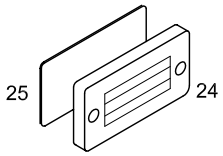

K- DETAYI
DETAIL - K

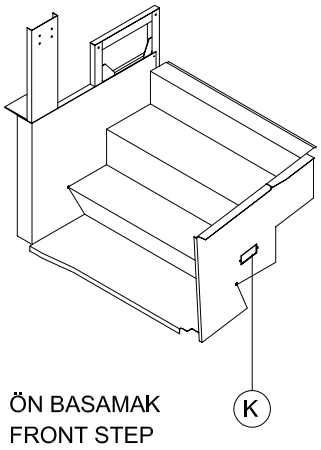

ÖN BASAMAK
FRONT STEP

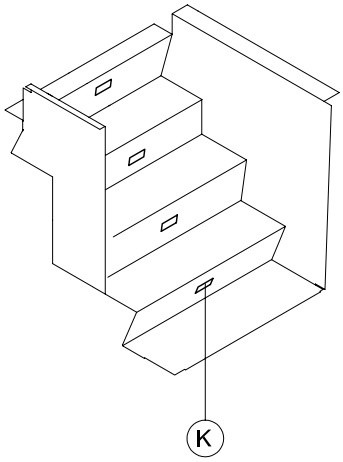

ORTA BASAMAK
CENTER STEP

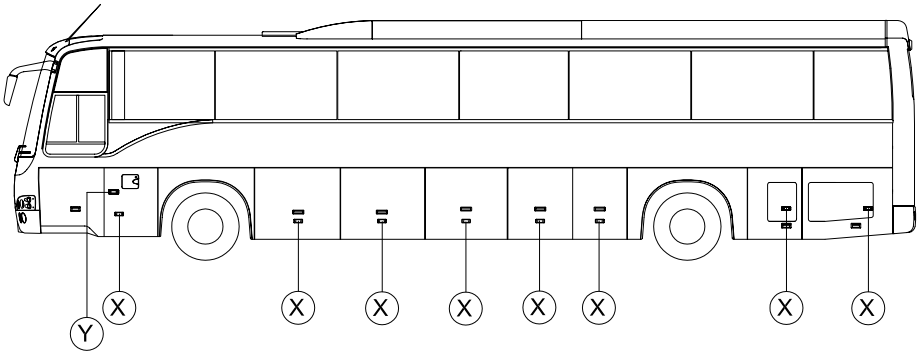

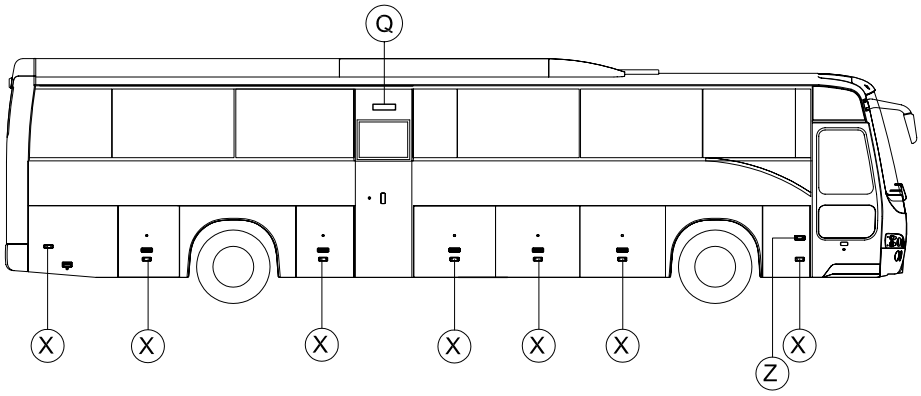

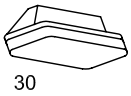

Q- DETAYI
DETAIL - Q

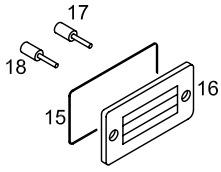

X- DETAYI
DETAIL - X

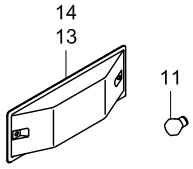

Y ve Z DETAYI
DETAIL Y-Z

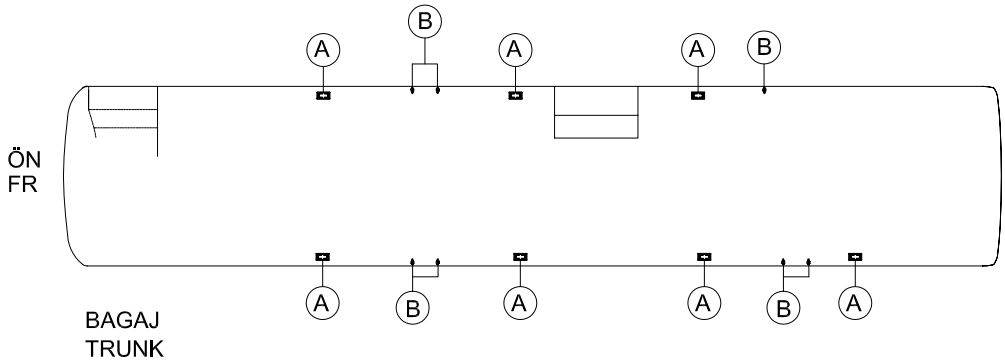

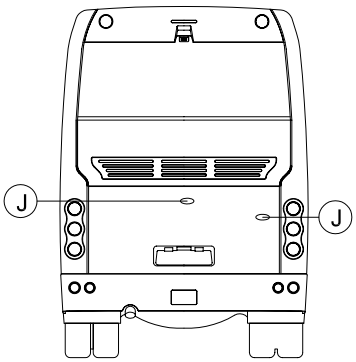

MOTOR ODASI
ENGINE ROOM

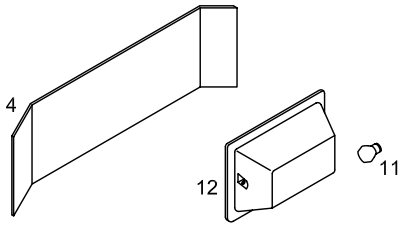

A- DETAYI
DETAIL - A

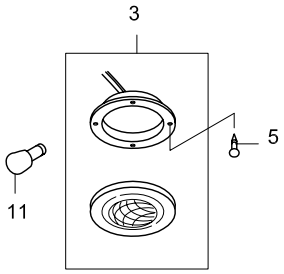

J- DETAYI
DETAIL - J

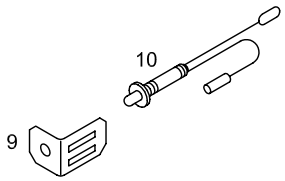

B-DETAYI
DETAIL - B

TEMSA	Bagaj,koridor,basamak, motor odası ve yan lambalar Trunk room, step, aisle and side lamps	Drw.no: Vehicle Model: **TB162W, TB162Z, TB162X, TB162Y** **TB163W, TB163Z, TB163X, TB163Y**	**26-030** RevDate: Page: 1

Pos	Part Number	Turkish	English	German	Qty	R/P	From	Up To	Original Number Supplier
3	TC852120	LAMBA	LAMP		2		1		2JA 001 335-011 HELLA
4	64195-60000-70Y	LAMBA BRAKETİ	BRACKET LAMP		7		1	150204	
4	TU152124AY	LAMBA BRAKETİ	BRACKET LAMP		7		150204		
5	MF453903Y	VİDA (2.9X12)	SCREW		AR		1		
9	64195-60030-55Y	SİVİÇ BRAKETİ	BRACKET SWITCH		5		1		
10	TU252137Y	SİVİÇ	SWITCH		8		1		
11	MF820185Y	AMPUL (24V-10W)	BULB		AR		1		
12	TA248808Y	BAGAJ LAMBASI	LAMP ASSY LUGGAGE		7		1	?	
12	TU252137Y	BAGAJ LAMBASI	LAMP ASSY LUGGAGE		7		?		
13	TC856564Y	SOL SİNYAL LAMBASI	SIDE SIGNAL LAMP LH		1		1		2JA001335-011
14	TC856563Y	SAG SİNYAL LAMBASI	SIDE SIGNAL LAMP RH		1		1		FARPLAS 03MFR0264
15	TC828122Y	CONTA	SEAL RING		24		1		
16	TC856565Y	YAN İZ LAMBASI	SIDE TRACE LAMP		13		1	150205	03MFU9610-001 FARPLAS
16	TC856566Y	YAN İZ LAMBASI	SIDE TRACE LAMP		13		150205		
17	TC828120Y	SOKET	SOCKET		12		1		
18	TC828121Y	TERMİNAL	TERMINAL		24		1		
24	61723-60800-55Y	LAMBA	LAMP ASSY		12		1		
25	61723-60800-56Y	CONTA	PACKING		12		1		
30	4994005	ORTA BASAMAK LAMBASI	CENTER STEP LIGHT		1		1		ELLAMP

TEMSA	Multiset sistem Multiset system	Group No : 26-040 Draw. Num. : x Rev. Date : Page : 1
	Vehicle Model: TB162W, TB162Z, TB162X, TB162Y, TB163W, TB163Z, TB163X, TB163Y	

12 meter vehicle

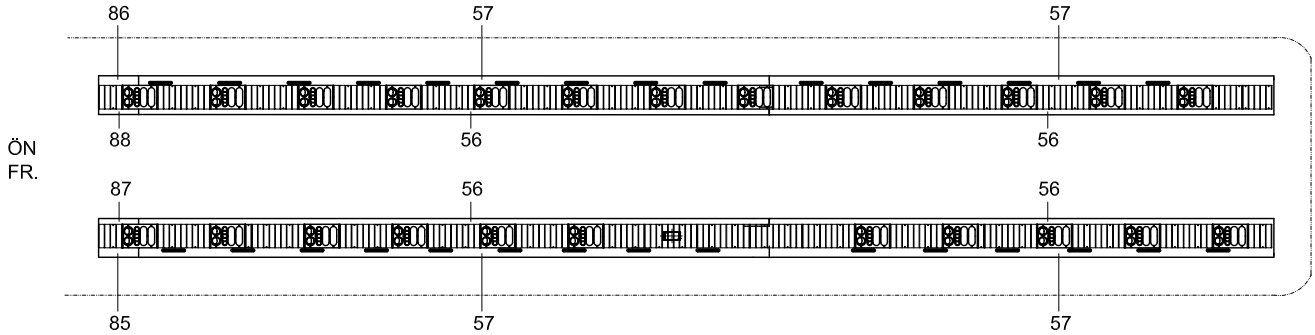

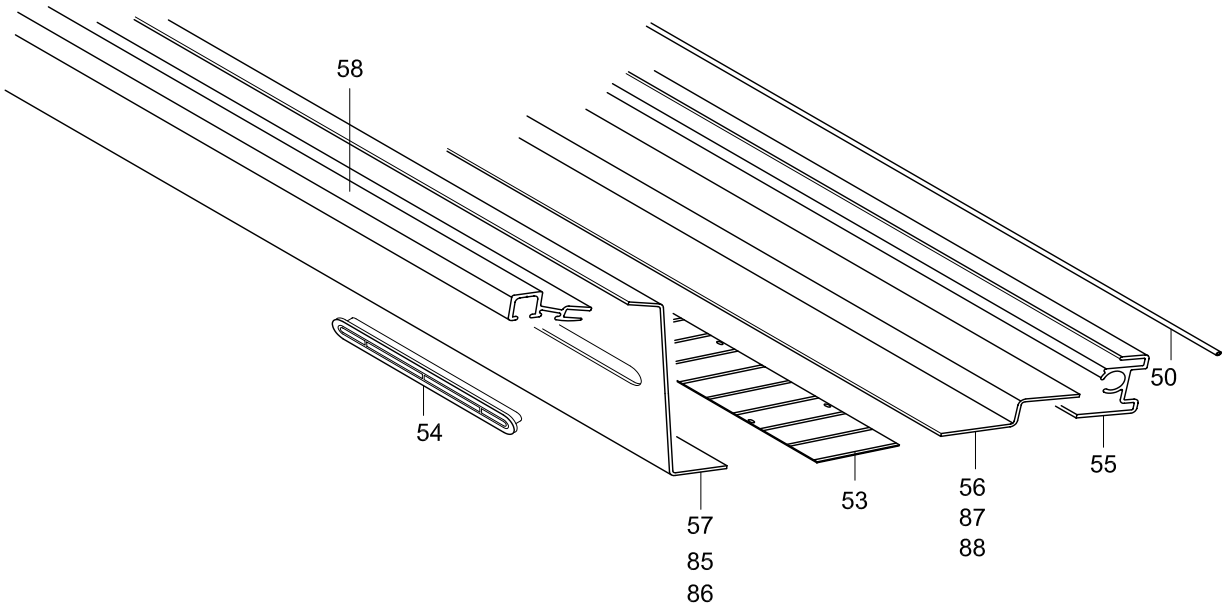

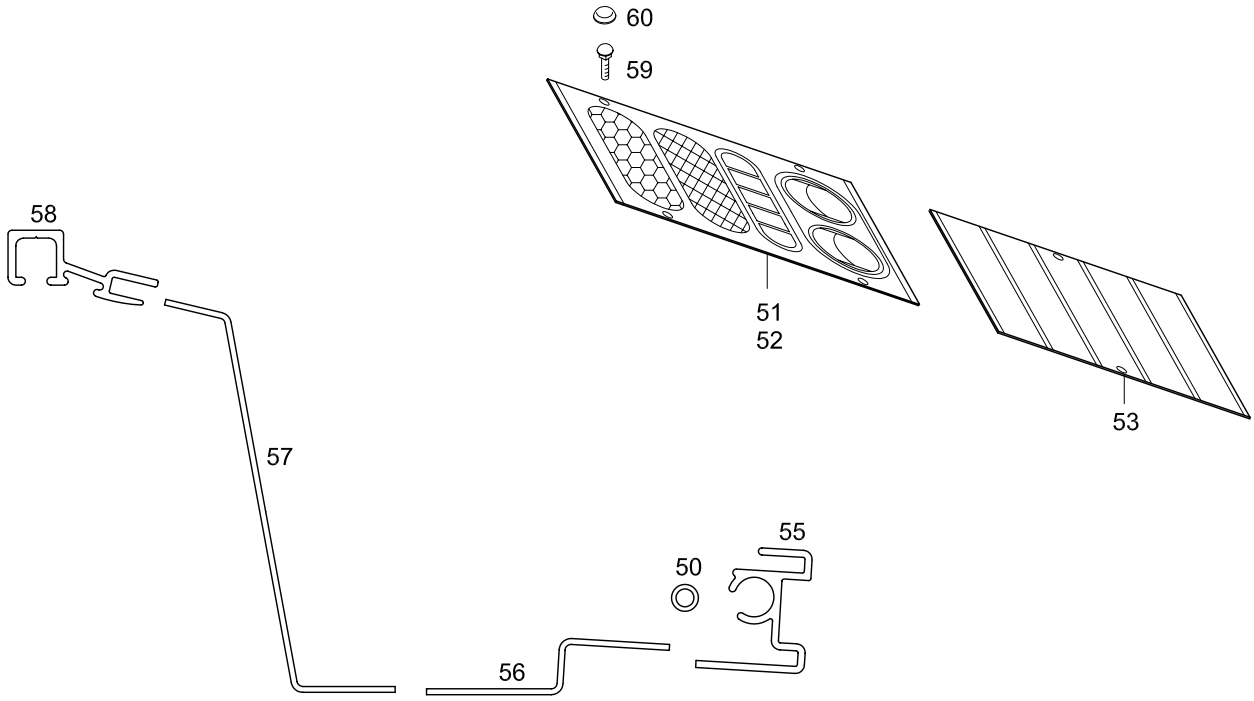

12.8 meter vehicle

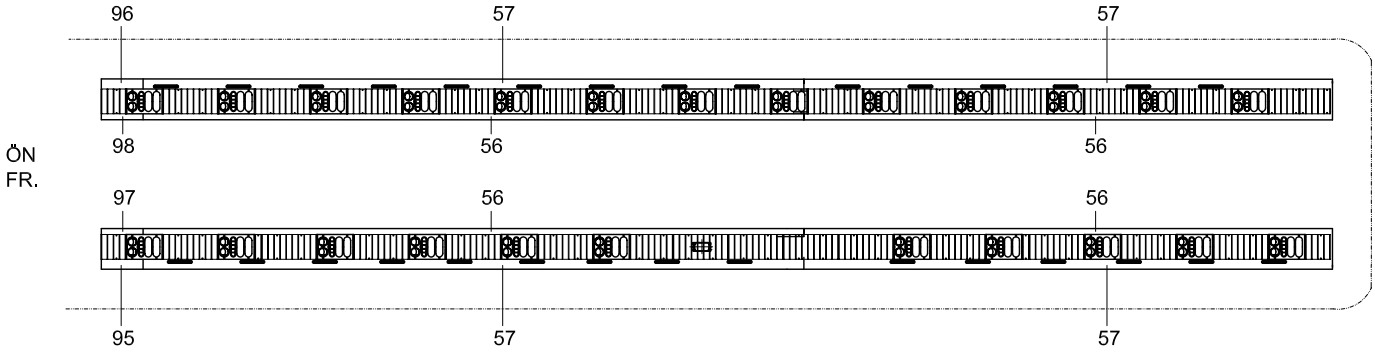

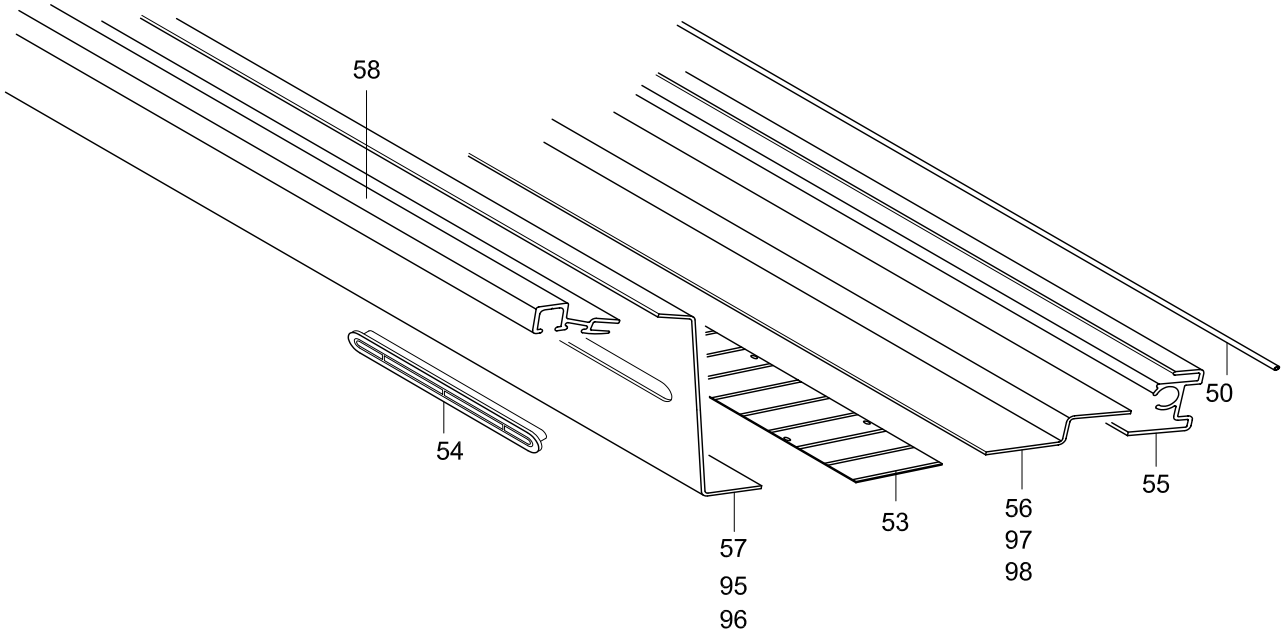

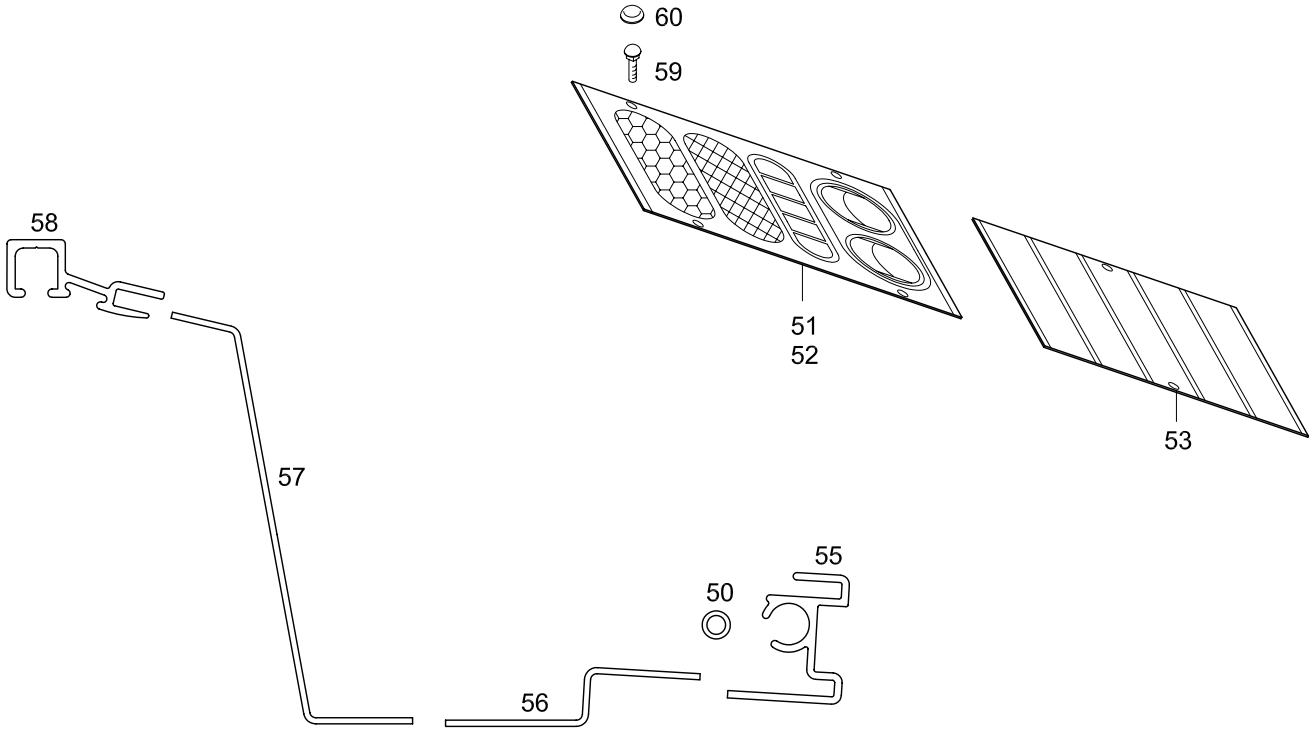

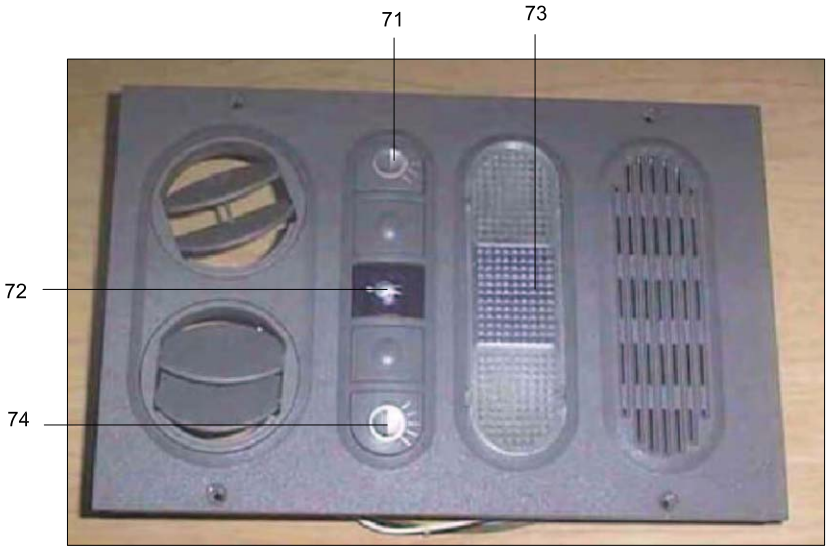
71
73
72
74

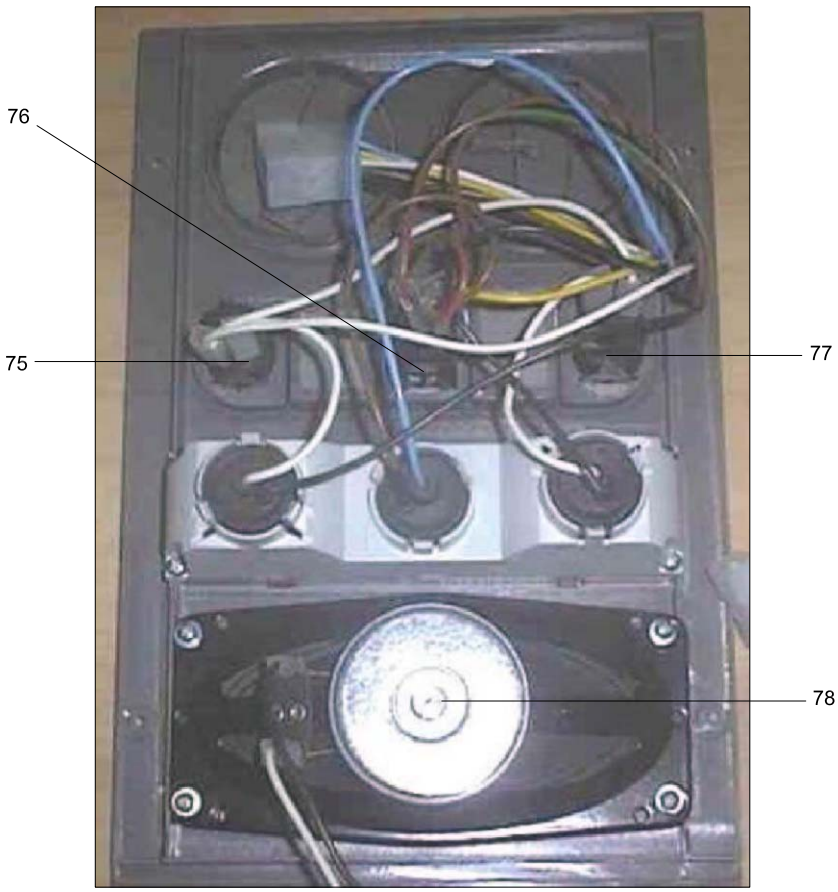
76
75
77
78

TEMSA	Multiset sistem Multiset system	Drw.no: Vehicle Model: TB162W, TB162Z, TB162X, TB162Y TB163W, TB163Z, TB163X, TB163Y	26-040 RevDate: Page: 1

Pos	Part Number	Turkish	English	German	Qty	R/P	From	Up To	Original Number Supplier
50	2090036	KLAVUZ MİL	PIM		6		1		ELLAMP
51	4997003	MULTISET-HOPARLÖRSÜZ	MULTISET-W.O.SPEAKER		17		1		ELLAMP
52	4997004	MULTISET-HOPARLÖRLÜ	MULTISET-W. SPEAKER		12				ELLAMP
53	3210025	ARA PARÇA	SPACER		30		1		ELLAMP
54	3450012	HAVA MENFEZİ	LOSE AIR		30		1		ELLAMP
55	H50100340-000	HAVA KANALI PROFİLİ	AIR CHANNEL PROFILE		4		1		ELLAMP
56	3551445	MULTISET LEVHASI	MULTISET SHEET		4		1		ELLAMP
57	3551445	MULTISET LEVHASI	MULTISET SHEET		4		1		ELLAMP
58	5500324	PERDE RAYI	CURTAIN PROFILE		4		1		ELLAMP
59	MF457595	VİDA	SCREW		AR		1		
60	3210015	VİDA BAŞLIĞI	CAP SCREW		AR		1		ELLAMP
71	3210174	SAĞ OKUMA LAMBASI BUTONU	RIGHT READING LAMP BUTTUN		AR		1		ELLAMP
72	3410052	SERVİS LAMBASI BUTONU	SERVICE LAMP BUTTON		AR		1		ELLAMP
73	3210004	OKUMA LAMBASI CAMI	READING LAMP GLASS		AR		1		ELLAMP
74	3210175	SOL OKUMA LAMBASI BUTONU	LEFT READING LAMP BUTTON		AR		1		ELLAMP
75	3020301	SAĞ OKUMA LAMBASI SİVİCİ	RIGHT READING LAMP SWITCH		AR		1		ELLAMP
76	3020303	SERVİS LAMBASI SİVİCİ	SERVICE LAMP SWITCH		AR		1		ELLAMP
77	3010301	SOL OKUMA LAMBASI SİVİCİ	LEFT READING LAMP SWITCH		AR		1		ELLAMP
78	3020110	HOPARLÖR	LOUD-SPEAKER		AR		1		ELLAMP
85	62371-96516-05Y	MULTISET LEVHASI	MULTISET SHEET		1		1		ELLAMP
86	62371-96516-06Y	MULTISET LEVHASI	MULTISET SHEET		1		1		
87	62371-96516-07Y	MULTISET LEVHASI	MULTISET SHEET		1		1		
88	62371-96516-08Y	MULTISET LEVHASI	MULTISET SHEET		1		1		
95	62371-97516-05Y	MULTISET LEVHASI	MULTISET SHEET		1		1		
96	62371-97516-06Y	MULTISET LEVHASI	MULTISET SHEET		1		1		
97	62371-97516-07Y	MULTISET LEVHASI	MULTISET SHEET		1		1		
98	62371-97516-08Y	MULTISET LEVHASI	MULTISET SHEET		1		1		

TEMSA	Ön kumanda siviçleri - 15.05.2004 e kadar Front switches - up to 2004' 05.15 Vordere Steuerungswitsch	Group No : 26-050 Draw. Num. : x Rev. Date : Page : 1
	Vehicle Model: TB162W, TB162Z, TB163W, TB163Z,	

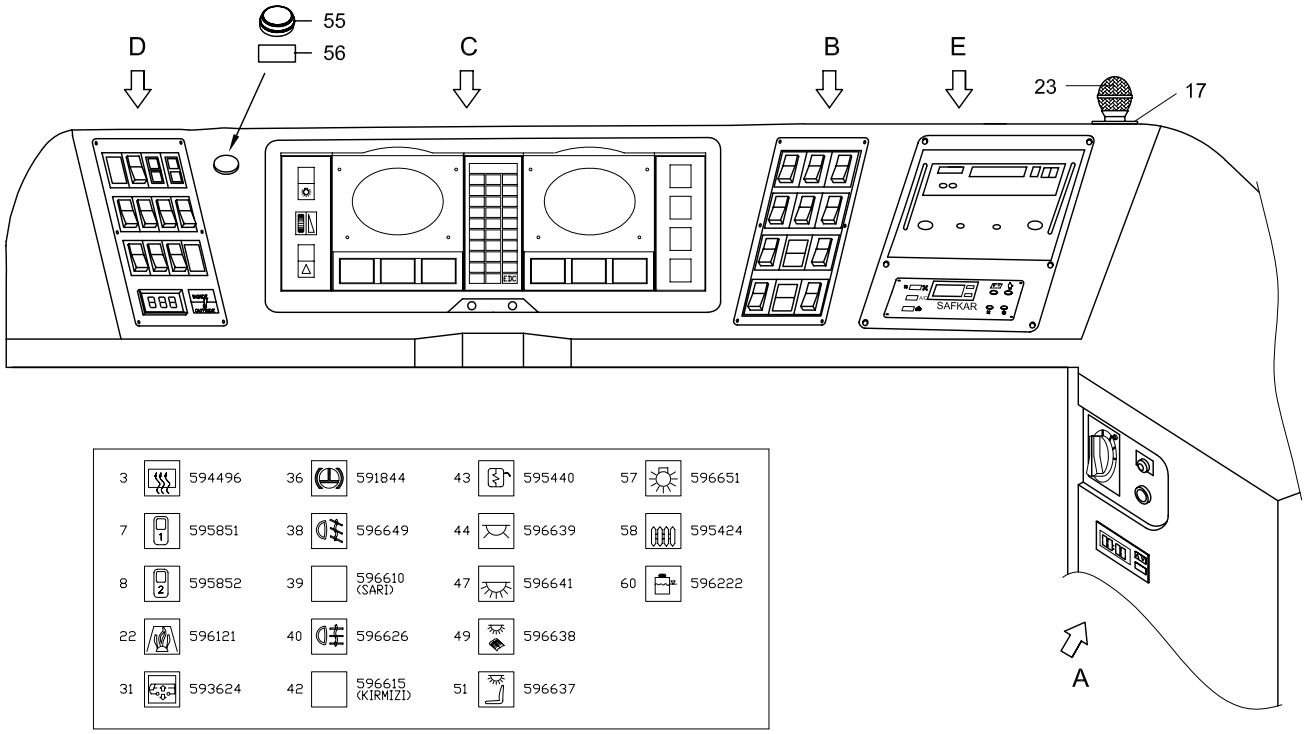

3	594496	36	591844	43	595440	57	596651
7	595851	38	596649	44	596639	58	595424
8	595852	39	596610 (SARI)	47	596641	60	596222
22	596121	40	596626	49	596638		
31	593624	42	596615 (KIRMIZI)	51	596637		

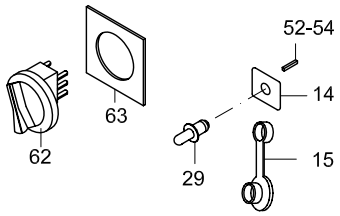

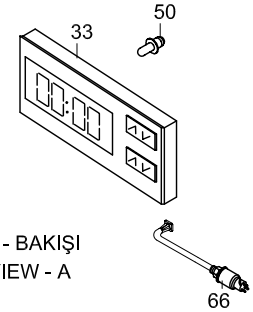

A - BAKIŞI
VIEW - A

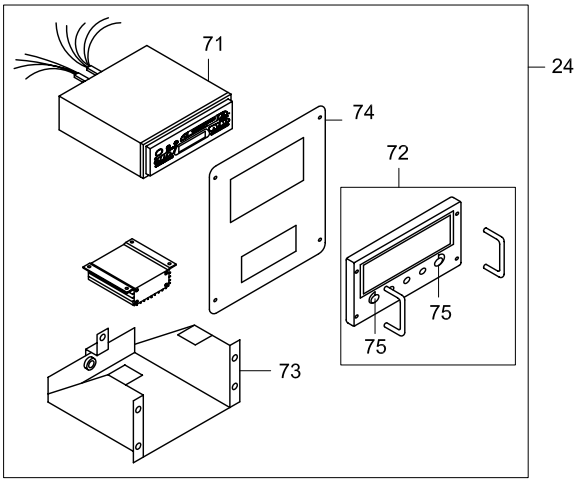

REF. 26-070

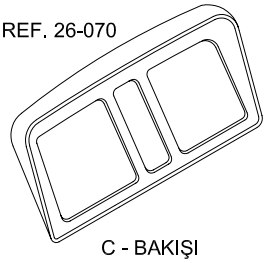

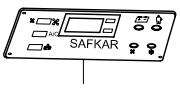

E - BAKIŞI
VIEW - E

C - BAKIŞI
VIEW - C

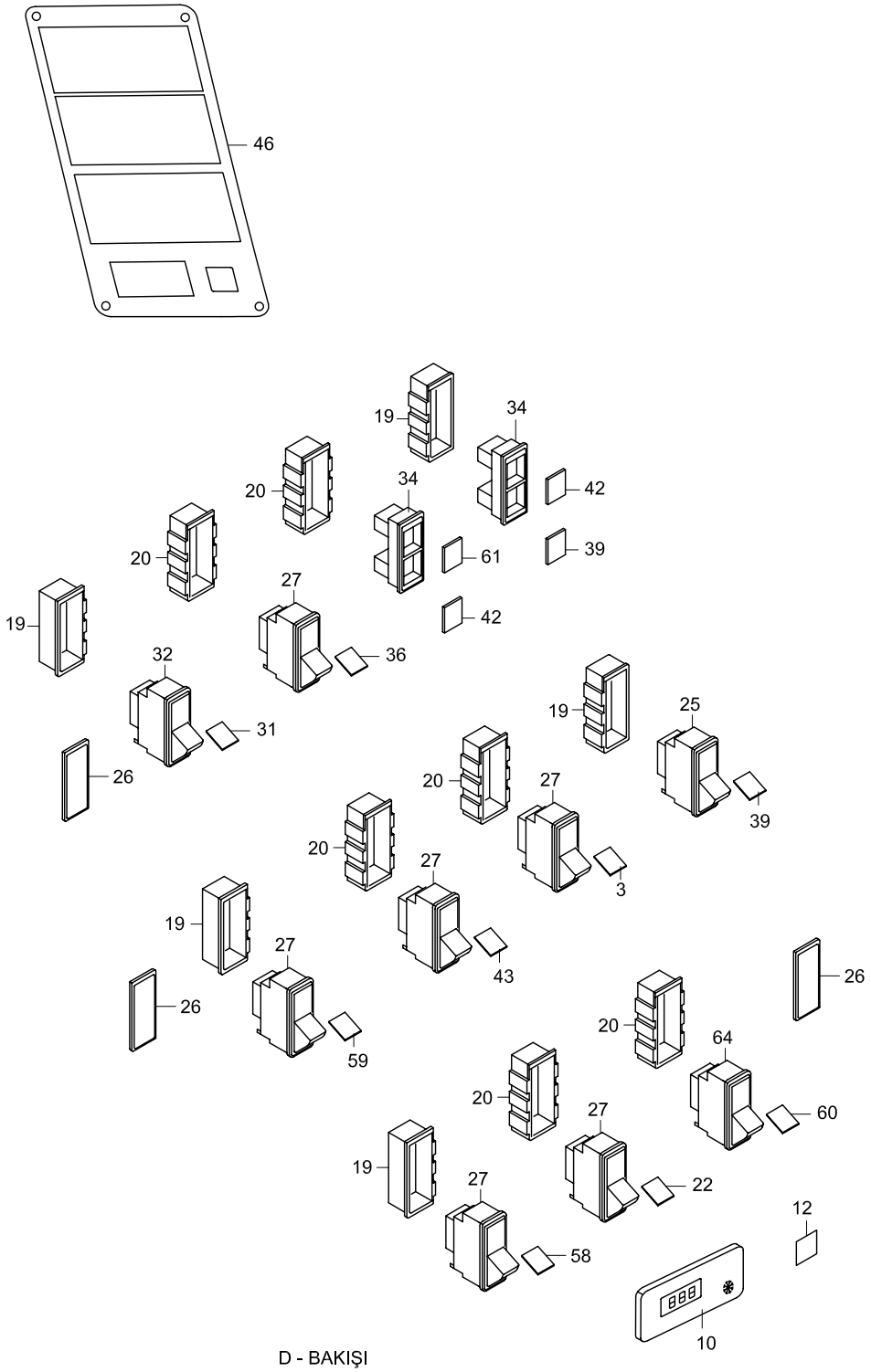

D - BAKIŞI
VIEW - D

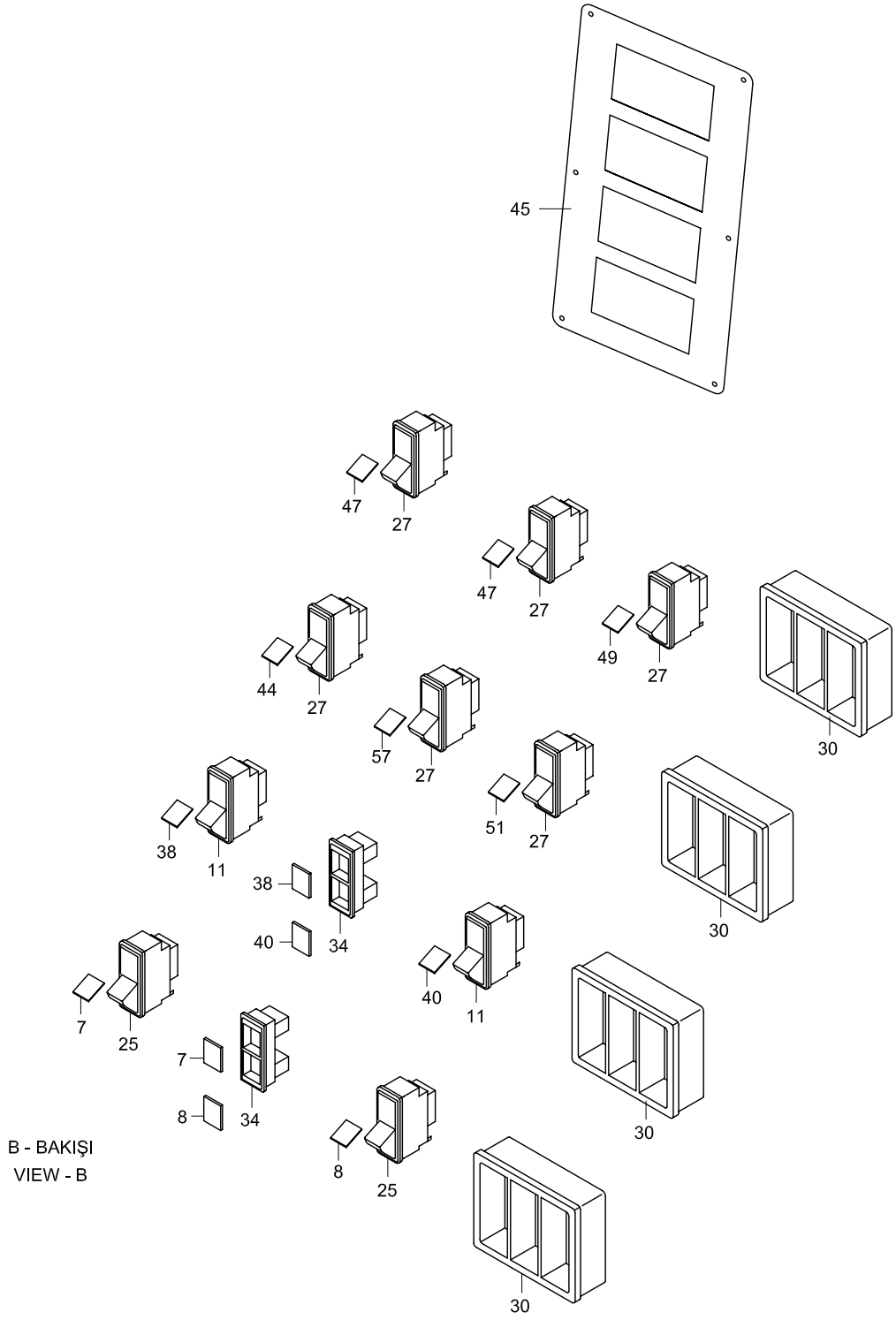
45
47
27
47
27
49
27
30
44
27
57
27
51
27
30
38
11
38
34
40
40
11
30
7
25
7
34
8
8
25
30
30
B - BAKIŞI
VIEW - B

TEMSA	Ön kumanda siviçleri - 15.05.2004 e kadar Front switches - up to 2004' 05.15	Drw.no : 64153-96720-82 Vehicle Model: TB162W, TB162Z TB163W, TB163Z	26-050 RevDate: Page: 1

Pos	Part Number	Turkish	English	German	Qty	R/P	From	Up To	Original Number Supplier
3	594496Y	ETİKET - ÖN KAPI CAMI ISITICI	INSERT- FR DOOR HEATING		2		1		
7	595851Y	ETİKET - ÖN KAPI	INSERT - FR DOOR		2		1		
8	595852Y	ETİKET - ORTA KAPI	INSERT - CENTER DOOR		2		1		
10	62017-30710-26Y	TERMOMETRE	THERMOMETER		1		1		
11	511059Y	SİVİÇ	SWITCH		2		1		
12	64153-70720-12Y	ETİKET - TERMOMETRE	INSERT - THRMOMETER		1		1		
13	62305-90020-10	A/C KONTROL PANELİ	PANEL CONTROL A/C		1		1		SAFKAR
14	64153-70729-02Y	ETİKET	LABEL		1		1		
15	64159-10010-T1Y	ÇAKMAK	LIGHTER		1		1		
19	594802Y	UÇ ÇERÇEVE	END PIECE		4		1		
20	594801Y	ARA ÇERÇEVE	INTERMEDIARY PIECE		4		1		
22	596121Y	ETİKET-WEBASTO	INSERT - PREHEATER		1		1		
23	64187-60010-72Y	MİKROFON	MICROPHONE		1		1		
24	64183-80016-71Y	RADYO+KASETÇALAR+KONV.KOM	RADIO+CASETTE+CONVERTER ASSY		1		1		
24	64183-90016-71Y	RADYO+ CD+KONVERTÖR KOMP	RADIO+CD+CONVERTER ASSY		1		1		
25	511201Y	SİVİÇ	SWITCH - PUSH		3		1		
26	596273Y	KAPAK	COVER		3		1		
27	511018Y	SİVİÇ	SWITCH - PUSH		11		1		
29	64153-70729-01Y	İKAZ LAMBASI	LAMP CAUTION		1		1		
30	595502Y	ÇERÇEVE	MOUNTING FRAME		4		1		
31	593624Y	ETİKET - KNEELING	INSERT - KNEELING		1		1		
32	511150Y	SİVİÇ - KNEELING	SWITCH - KNEELING		1		1		
33	TU252146Y	DİJİTAL TERMOSTAT	DGITAL THERMOSTAT		1				
34	511503Y	PİLOT LAMBASI	LAMP PILOT		4		1		
36	591844Y	ETİKET - INTARDER	INSERT - INTARDER		1		1		
38	596649Y	ETİKET - ÖN SİS	INSERT - FR LAMP CLEARENCE		2		1		
39	596610Y	ETİKET - ASR	INSERT - ASR		2		1		
40	596626Y	ETİKET - ARKA SİS	INSERT -RR CLEARANCE		2		1		
42	596615Y	ETİKET - SEMBOLSÜZ KIRMIZI	INSERT - WITHOUT SYMBOL RED		2		1		
43	595440Y	ETİKET - AYNA ISITICI	INSERT - MIRROR HEATING		1		1		
44	596639Y	ETİKET - GECE AYDINLATMA	INSERT - LAMP		1		1		
45	64153-70720-56Y	PANEL	PANEL		1		1		
46	64153-96720-50Y	PANEL	PANEL		1		1		
47	596641Y	ETİKET - İÇ AYDINLATMA	INSERT - ROOM LAMP		2		1		
49	596638Y	ETİKET -OKUMA LAMBALARI	INSERT - READING LAMP		1		1		

TEMSA	Ön kumanda siviçleri - 15.05.2004 e kadar Front switches - up to 2004' 05.15	Drw.no : 64153-96720-82 Vehicle Model: TB162W, TB162Z TB163W, TB163Z	26-050 RevDate: Page: 2

Pos	Part Number	Turkish	English	German	Qty	R/P	From	Up To	Original Number Supplier
50	SMBD08114Y	SARI İKAZ LAMBASI	LED LAMP - YELLOW		1		1		
51	596637Y	ETİKET - FAR	INSERT - HEAD LAMP		1		1		
52	TH992002Y	TERMINAL	TERMINAL		AR		1		
54	TH991008Y	TERMİNAL	TERMINAL		AR		1		
55	64103-90109-10Y	ACİL STOP BUTONU	BUTTON-EMERGENCY STOP		1		1		
56	64103-90983-01Y	ETİKET	LABEL		1		1		
57	596651Y	ETİKET - KORİDOR LAMBASI	INSERT - AISLE LAMP		1				
58	594424Y	ETİKET-KONVEKTÖR	INSERT- CONVECTION		1		1		
59	595420Y	ETİKET-WC	LABEL		1		1		
60	595132Y	ETİKET - KALORİFER	LABEL- HEATER		1		1		
61	596222Y	ETİKET-WC TANK	LABEL - WC TANK		1		1		
62	64103-90109-15Y	SİVİÇ - 4	SWITCH		1		1		
63	64153-90729-01Y	DEFROSTER SİVİÇ ETİKETİ	DEFROSTER SWITCH LABEL		1		1		
64	511032Y	KALORİFER SİVİÇİ	SWITCH HEATER		1		1		
65	596620Y	ETİKET- SİYAH	LABEL - BLACK		1		1		
66	PB100011	SENSÖR KABLOSU	SENSORY CABLE		1		1		
71	64183-70026-70Y	RADYO+KASETÇALAR+KONV.	RADIO+CASETTE+CONVERTER		1		1		
71	7607005031	RADYO+ CD+KONVERTÖR	RADIO+CD+CONVERTER						
72	64183-70030-08Y	MONİTÖR+RADYO PANELİ	RADIO PANEL		1		1		
73	64183-70030-11Y	RADYO BRAKETİ	BRACKET RADIO		1		1		
74	64183-80017-15Y	RADYO PANELİ	PANEL RADIO		1		1		
74	64183-96017-16Y	RADYO PANELİ	PANEL RADIO		1		1		for automatic transmiss
75	64183-80016-16X	POTANSİYOMETRE-HOPAR	SWITCH+POTENCY-LOUDSPEAKER		2		1		

TEMSA	Ön kumanda siviçleri - 15.05.2004 den sonra Front switches - after 2004' 05.15	Group No : 26-051 Draw. Num. : x Rev. Date :
	Vehicle Model: TB162W, TB162Z, TB163W, TB163Z,	Page : 1

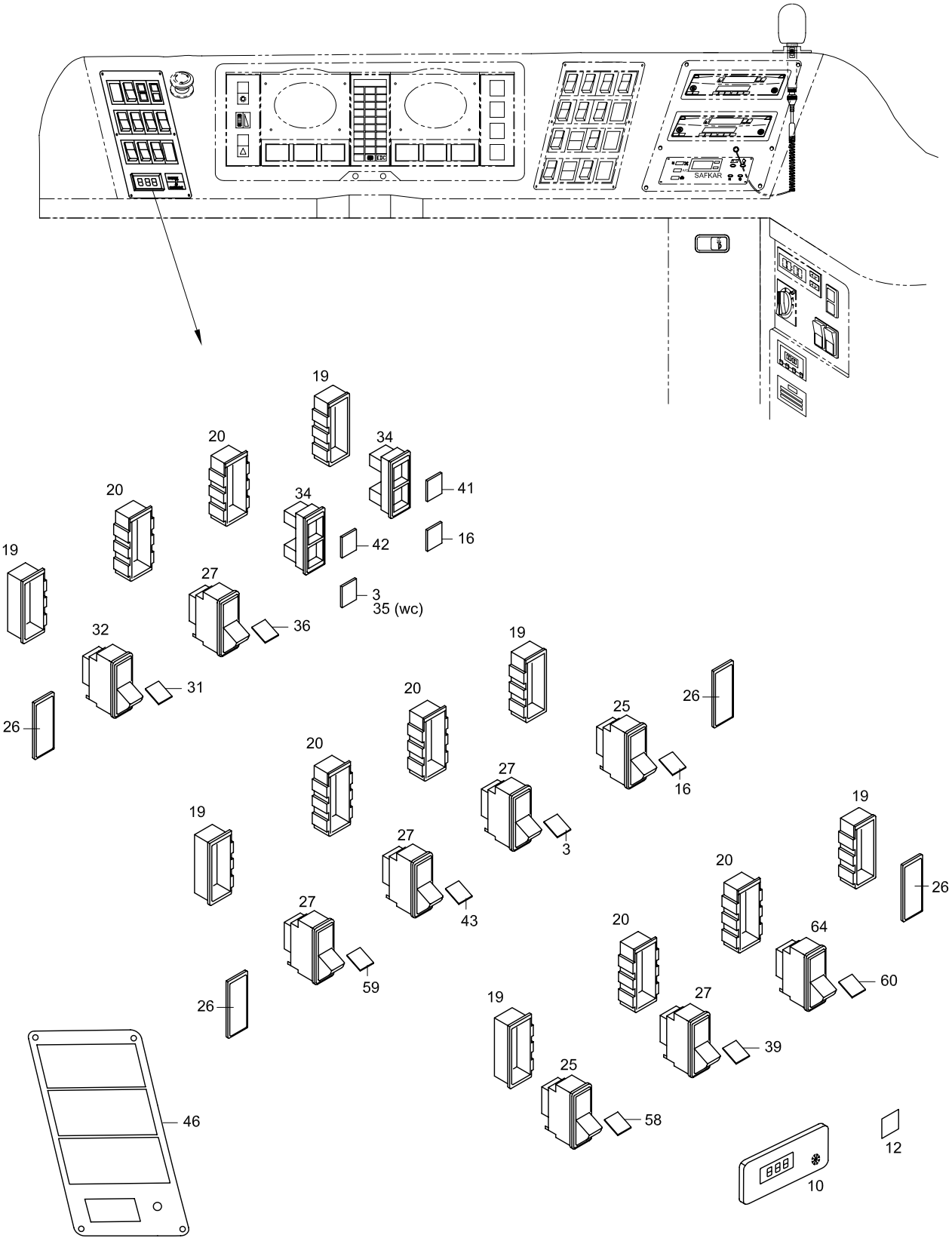

TEMSA	Ön kumanda siviçleri - 15.05.2004 den sonra Front switches - after 2004' 05.15	Group No : 26-051 Draw. Num. : x Rev. Date : Page : 2
	Vehicle Model: TB162W, TB162Z, TB163W, TB163Z,	

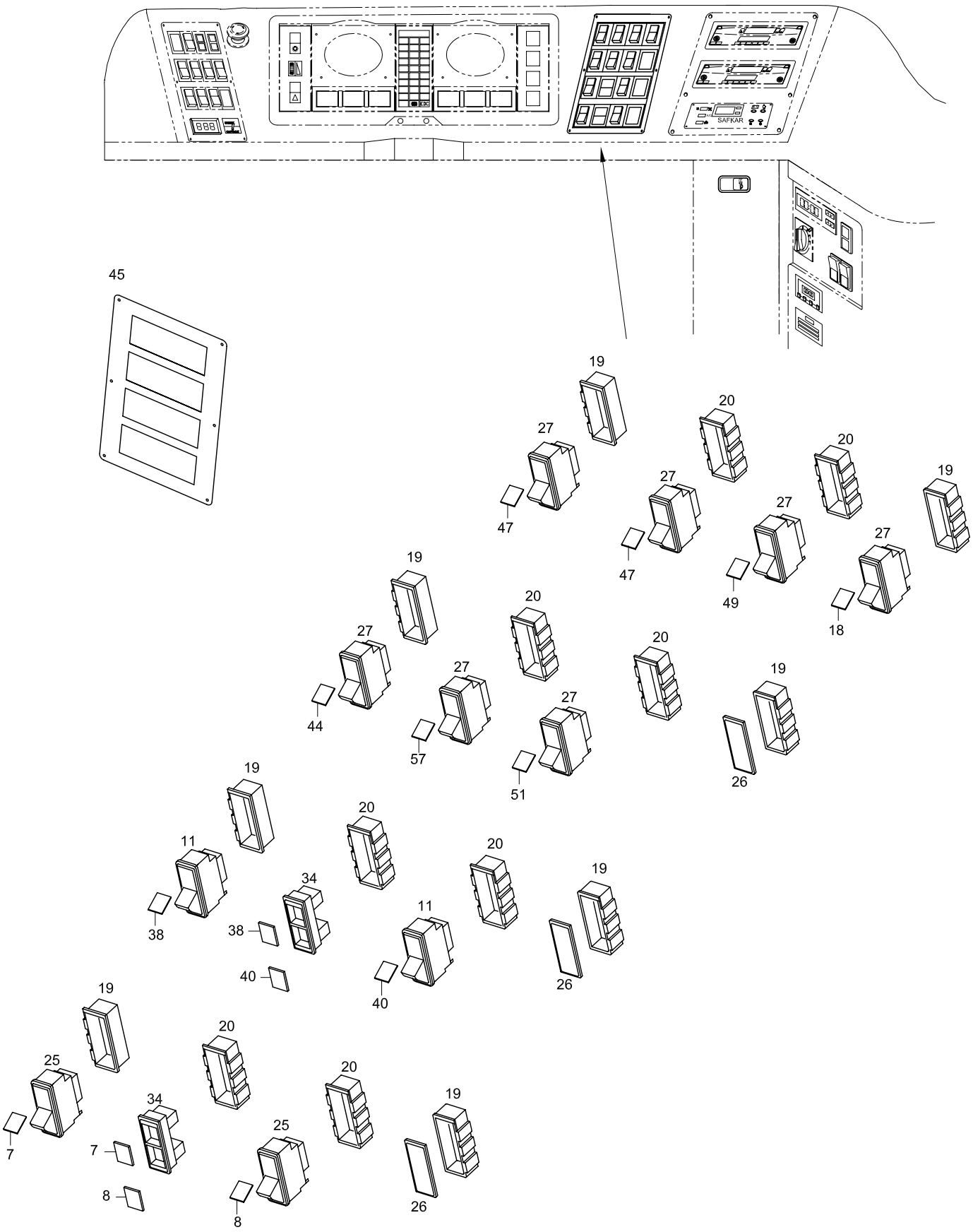

TEMSA	Ön kumanda siviçleri - 15.05.2004 den sonra Front switches - after 2004' 05.15	Group No : 26-051 Draw. Num. : x Rev. Date :
	Vehicle Model: TB162W, TB162Z, TB163W, TB163Z,	Page : 3

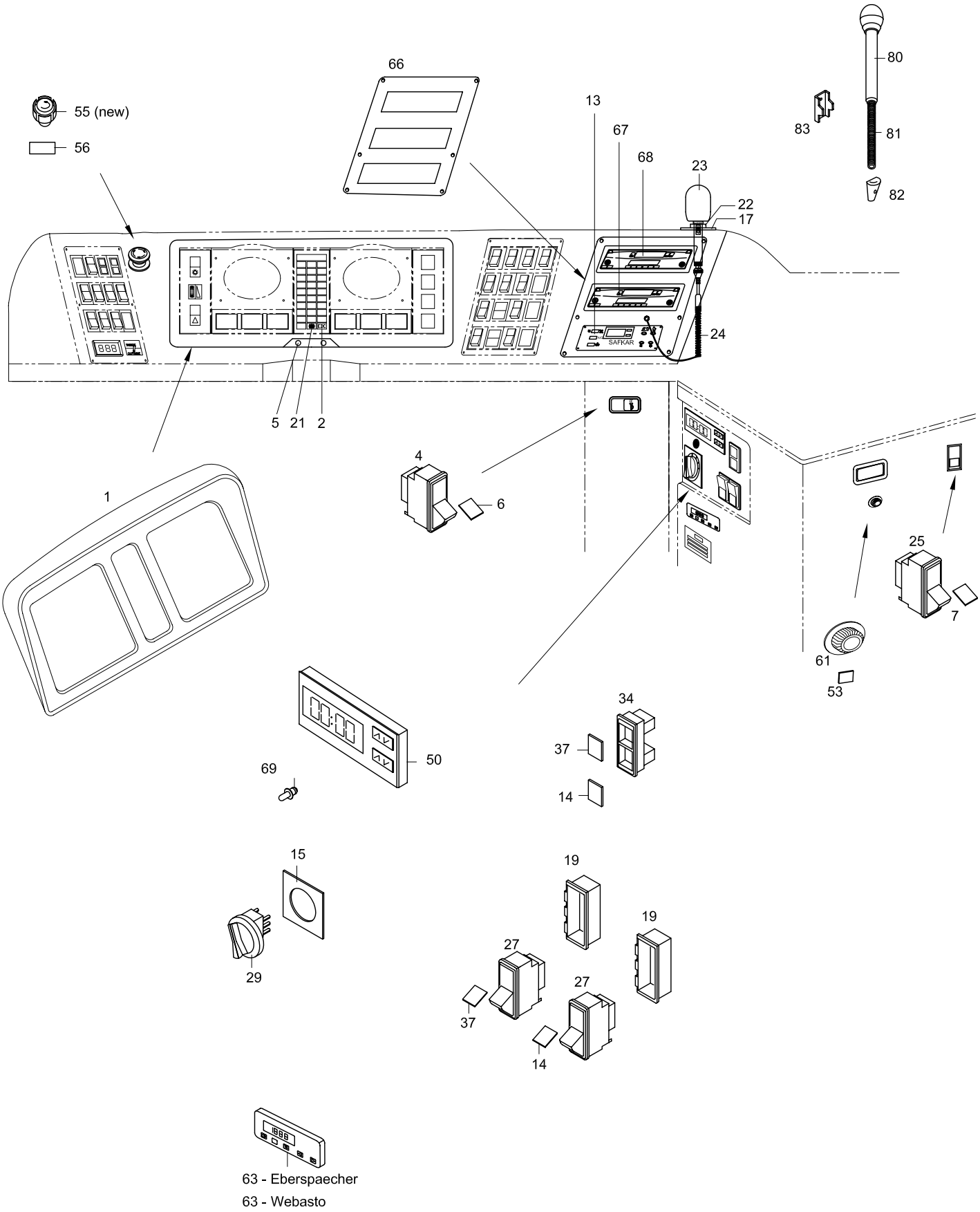

TEMSA	Ön kumanda siviçleri - 15.05.2004 den sonra Front switches - after 2004' 05.15	Drw.no : 64153-96720-82 Vehicle Model: **TB162W, TB162Z** **TB163W, TB163Z**	**26-051** RevDate: Page: 1

Pos	Part Number	Turkish	English	German	Qty	R/P	From	Up To	Original Number Supplier
1	64163-90510-70Y		GARNISH METER		1		1		
2	81.97802-2415	ETİKET - EDC	INSERT - EDC		1		1		
3	594496Y	ETİKET - ÖN KAPI CAMI ISITICI	INSERT- FR DOOR HEATING		2		1		
4	511111Y	SİVİÇ	SWITCH		1		1		
5	TF457598Y	VİDA	SCREW		5		1		
6	595400Y	ETİKET	INSERT		1		1		
7	595851Y	ETİKET - ÖN KAPI	INSERT - FR DOOR		3		1		
8	595852Y	ETİKET - ORTA KAPI	INSERT - CENTER DOOR		2		1		
10	62017-30710-26Y	TERMOMETRE	THERMOMETER		1		1	5.01.0	
10	62017-94710-26Y	TERMOMETRE	THERMOMETER		1		15.01.05		
11	511059Y	SİVİÇ	SWITCH		2		1		
12	64153-70720-12Y	ETİKET - TERMOMETRE	INSERT - THRMOMETER		1		1		
13	62305-90020-10X	A/C KONTROL PANELİ	PANEL CONTROL A/C		1		1		Safkar 55 25 00062
14	595424Y	ETİKET - KONVEKTÖR	INSERT - CONVECTOR		2		1		
15	64153-90729-01Y	DEFROSTER SİVİÇ ETİKETİ	DEFROSTER SWITCH LABEL		1		1		
16	595341Y	ETİKET - ASR	INSERT - ASR		2		1		
17	64187-90010-01Y	MİKROFON BURCU			1		1		
18	595140Y	ETİKET- MOTOR FAN	INSERT - MOTOR FAN		1		1		OPTION
19	594802Y	UÇ ÇERÇEVE	END PIECE		16		1		
20	594801Y	ARA ÇERÇEVE	INTERMEDIARY PIECE		14		1		
21	TY254116Y	ETİKET- FREN BALATASI	INSERT-BRAKE LINNING		1		1		
22	7607747050	MİKROFON YUVASI			1		1		
23	7607006110	MİKROFON	MICROPHONE		1		1		
24	7607006113	MİKROFON KABLOSU			1		1		
25	511201Y	SİVİÇ	SWITCH - PUSH		4		1		ASR OPTION
26	596273Y	KAPAK	COVER		5		1		OPTION
27	511018Y	SİVİÇ	SWITCH - PUSH		13		1		
29	64103-90109-15Y	SİVİÇ - 4	SWITCH		1		1		
31	593624Y	ETİKET - KNEELING	INSERT - KNEELING		1		1		OPTION
32	511150Y	SİVİÇ - KNEELING	SWITCH - KNEELING		1		1		OPTION
34	511503Y	PİLOT LAMBASI	LAMP PILOT		5		1		
35	596222Y	ETİKET-WC TANK	LABEL - WC TANK		1		1		OPTION
36	591844Y	ETİKET - INTARDER	INSERT - INTARDER		1		1		
37	596121Y	ETİKET-WEBASTO	INSERT - PREHEATER		1		1		
38	596649Y	ETİKET - ÖN SİS	INSERT - FR LAMP CLEARENCE		2		1		

TEMSA	Ön kumanda siviçleri - 15.05.2004 den sonra Front switches - after 2004' 05.15	Drw.no : 64153-96720-82 Vehicle Model: **TB162W, TB162Z** **TB163W, TB163Z**	**26-051** RevDate: Page: 2

Pos	Part Number	Turkish	English	German	Qty	R/P	From	Up To	Original Number Supplier
39	595143Y	ETİKET - GÜZERGAH TABELA			1		1		OPTION
40	596626Y	ETİKET - ARKA SİS	INSERT -RR CLEARANCE		2		1		
41	594468Y	ETİKET- YANGIN İKAZ	INSERT- FIRE WARNING		1		1		
42	596152Y	ETİKET - KAPI HAVA	INSERT - DOOR AIR		2		1		
43	595440Y	ETİKET - AYNA ISITICI	INSERT - MIRROR HEATING		1		1		
44	596639Y	ETİKET - GECE AYDINLATMA	INSERT - LAMP		1		1		
45	64153-90720-59Y	PANEL	PANEL		1		1		
46	64153-96720-50Y	PANEL	PANEL		1		1		
47	596641Y	ETİKET - İÇ AYDINLATMA	INSERT - ROOM LAMP		2		1		
49	596638Y	ETİKET -OKUMA LAMBALARI	INSERT - READING LAMP		1		1		
50	TU252146Y	DİJİTAL TERMOSTAT	DGITAL THERMOSTAT		1				
51	596637Y	ETİKET - FAR	INSERT - HEAD LAMP		1		1		
53	64153-70729-02Y	ETİKET	LABEL		1		1		
55	64103-90109-10Y	ACİL STOP BUTONU	BUTTON-EMERGENCY STOP		1		1		
55	TY250122Y	ACİL STOP BUTONU	BUTTON-EMERGENCY STOP		1		1		
56	64103-90983-01Y	ETİKET	LABEL		1		1		
57	596651Y	ETİKET - KORİDOR LAMBASI	INSERT - AISLE LAMP		1				
58	592879Y	TEST ETİKETİ			1				
59	595420Y	ETİKET-WC	LABEL		1		1		
60	595132Y	ETİKET - KALORİFER	LABEL- HEATER		1		1		
61	64153-70729-01Y	İKAZ LAMBASI	LAMP CAUTION		1		1		
63	TM250179Y	ZAMANLAYICI ÖN ISITICI	TIMER PREHEATER		1		120404		Eberspaecher
63	TC250179Y	ZAMANLAYICI ÖN ISITICI	TIMER PREHEATER		1		120404		Webasto
64	511032Y	KALORİFER SİVİÇİ	SWITCH HEATER		1		1		
66	64183-96017-17Y	PANEL	PANEL		1				
67	7607272002	SES GÜÇLENDİRİCİ	AMPLIFIKATOR		1				
68	7607005030	RADYO+KASETÇALAR KOMP	RADIO+CASETTE ASSY		1		1		
69	SMBD08114Y	LAMBA			1		1		
80	7607006121	KUĞU MİKROFON	MICROPHONE		1		1		
81	7607006118	KABLO	CABLE		1		1		
82	7607006116	MİKROFON TUTUCU	MOUNTING MICROPHONE		1		1		
83	7607022001	MİKROFON YUVASI	SEAT MICROPHONE		1		1		

TEMSA	Ön kumanda siviçleri Front switches Vordere Steuerungswitsch	Group No : 26-052 Draw. Num. : x Rev. Date : Page : 1
	Vehicle Model: TB162X, TB162Y, TB163X, TB163Y	

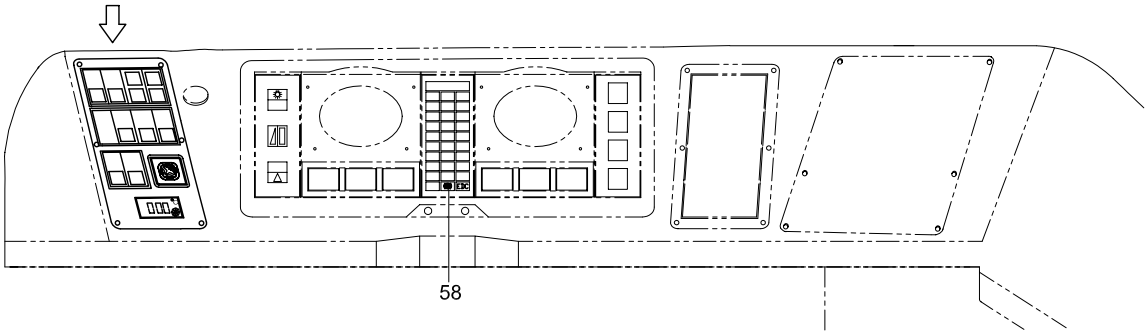

3	594496	17	596638	36	591844	43	595440	53	596651
6	595400	18	594468	38	596649	44	596639	56	595420
7	595851	21	596121	39	595341	47	596641	57	596222
8	595852	23	595132	40	596626	49	595140	58	TY254116
12	595424	35	595146	42	596152	50	596637	65	593624

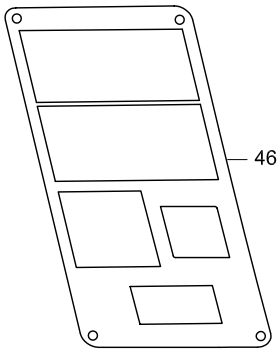

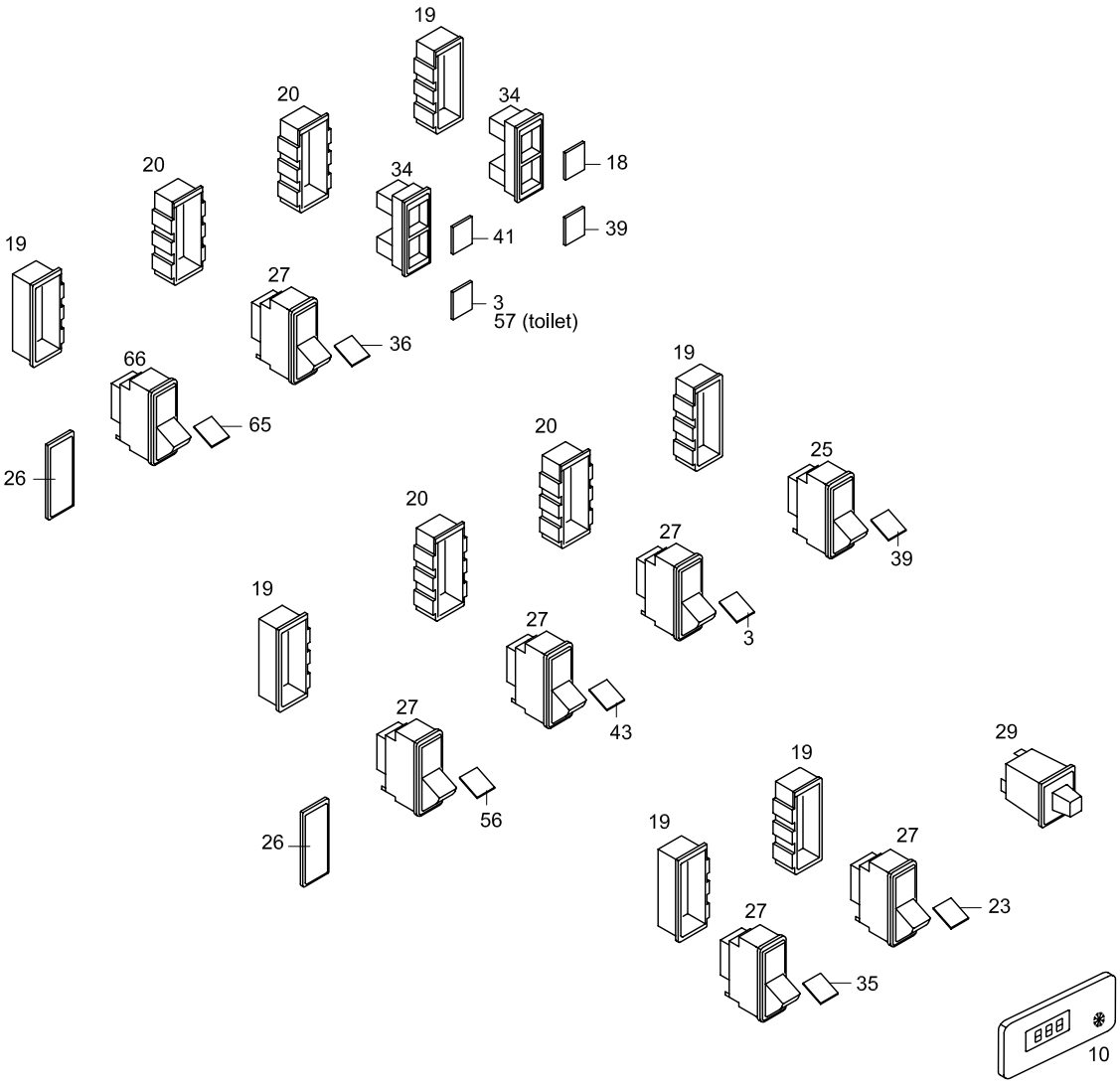

TEMSA	Ön kumanda siviçleri Front switches Vordere Steuerungswitsch	Group No : 26-052 Draw. Num. : x Rev. Date : Page : 2
	Vehicle Model: TB162X, TB162Y, TB163X, TB163Y	

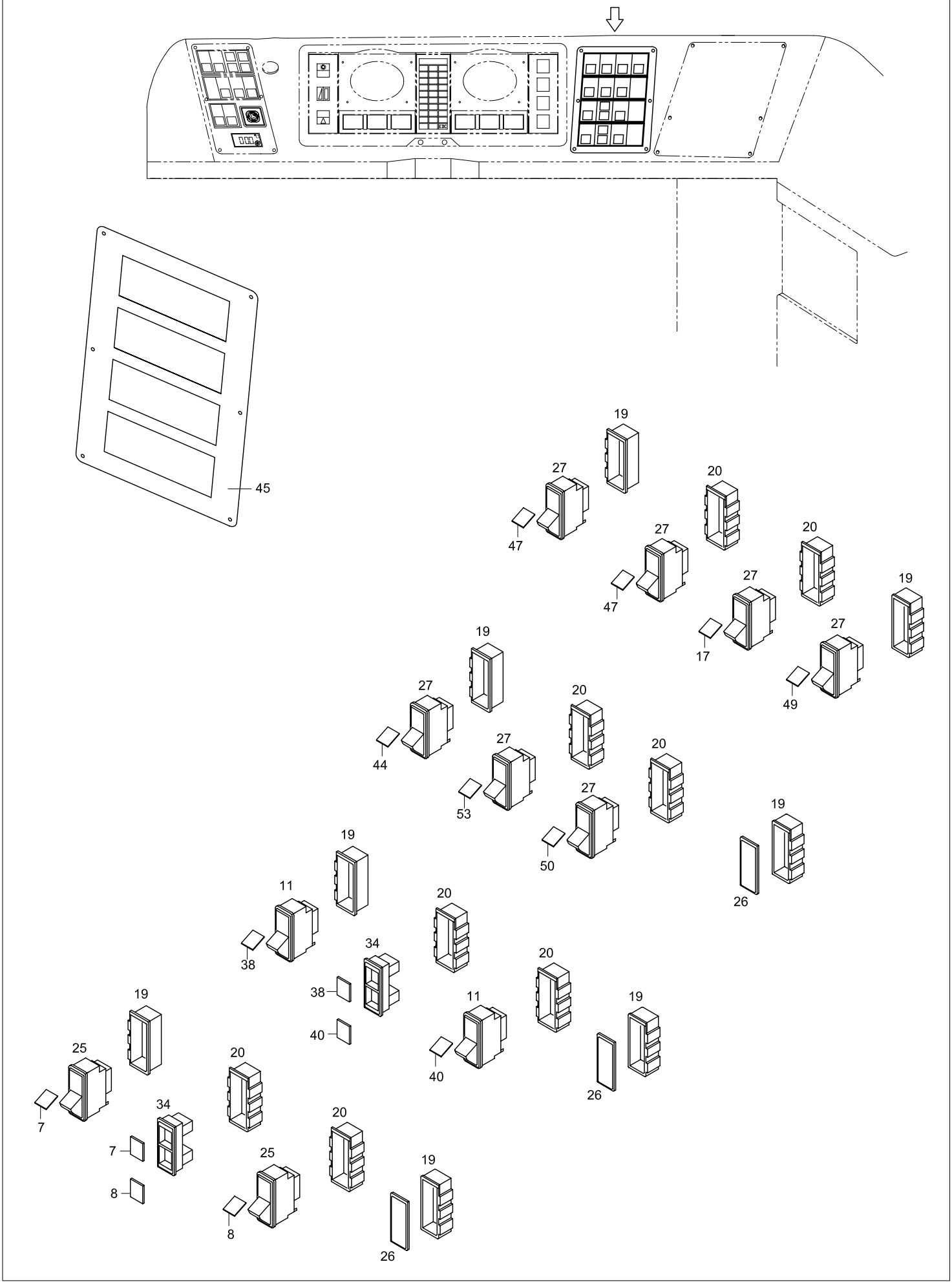

TEMSA	Ön kumanda siviçleri Front switches Vordere Steuerungswitsch	Group No : 26-052 Draw. Num. : x Rev. Date : Page : 3
	Vehicle Model: TB162X, TB162Y, TB163X, TB163Y	

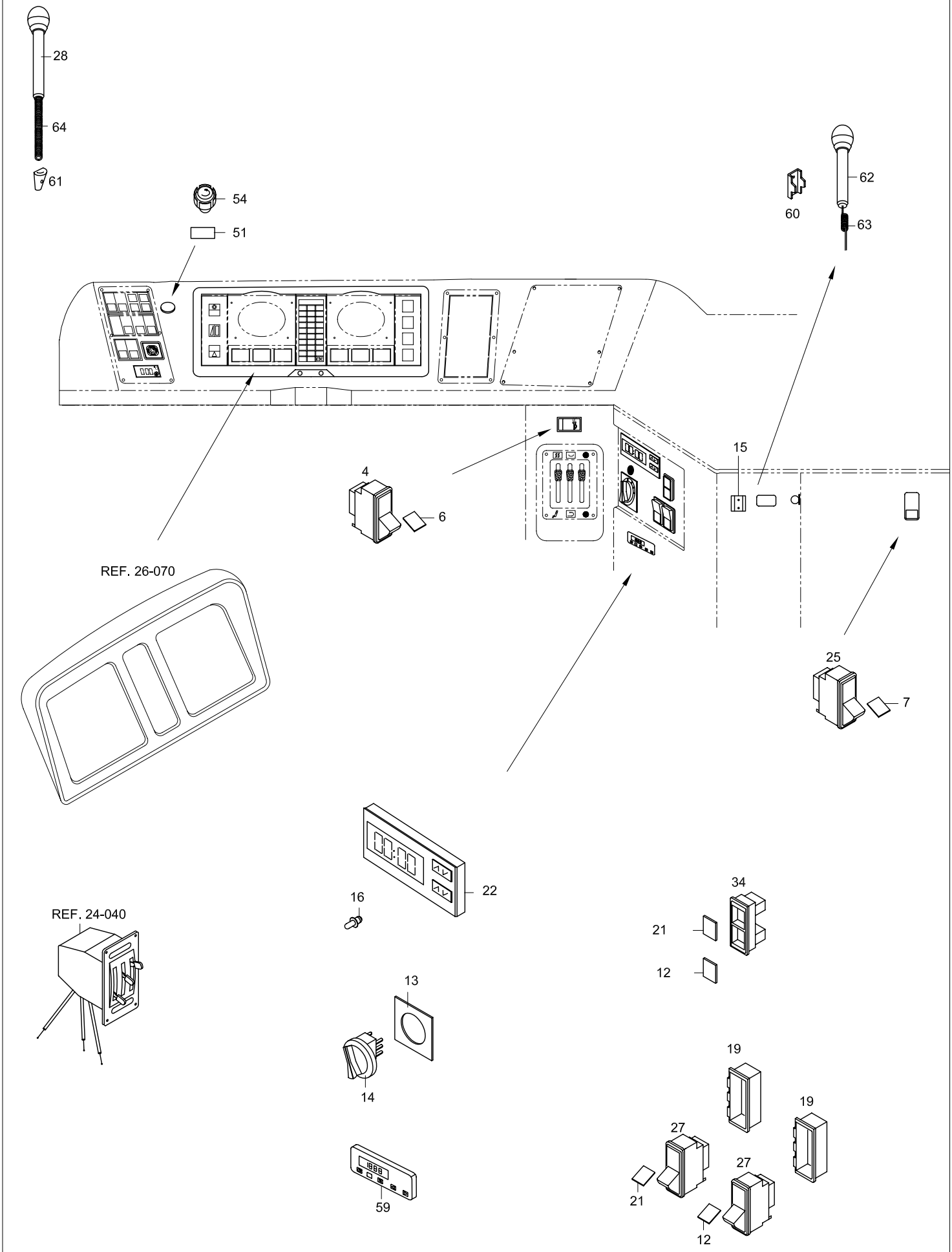

TEMSA	Ön kumanda siviçleri Front switches	Drw.no : 64153-94000-70 Vehicle Model: **TB162X, TB162Y** **TB163X, TB163Y**	**26-052** RevDate: Page: 1

Pos	Part Number	Turkish	English	German	Qty	R/P	From	Up To	Original Number Supplier
3	594496Y	ETİKET - ÖN KAPI CAMI ISITICI	INSERT- FR DOOR HEATING		1		1		
4	511111Y	SİVİÇ	SWITCH		2		1		
6	595400Y	ETİKET	INSERT		1		1		
7	595851Y	ETİKET - ÖN KAPI	INSERT - FR DOOR		2		1		
8	595852Y	ETİKET - ARKA KAPI	INSERT - RR DOOR		2		1		
10	62017-94710-26Y	TERMOMETRE	THERMOMETER		1		1		
11	511059Y	SİVİÇ	SWITCH		2		1		
12	594424Y	ETİKET-KONVEKTÖR	INSERT- CONVECTION		1		1		
13	64153-90729-01Y	DEFROSTER SİVİÇ ETİKETİ	LABEL SWITCH DEFROSTER		1		1		
14	64103-90109-15Y	SİVİÇ	SWITCH		1		1		
15	64153-90720-49Y	PLAKA	PLATE		1		120404		
16	SMBD08214	YEŞİL İKAZ LAMBASI	LED LAMP - GREEN		1		1		
17	596638Y	ETİKET- OKUMA LAM	INSERT - READING LAMP		1		120404		
18	594468Y	ETİKET- YANGIN İKAZ	INSERT- FIRE WARNING		1		120404		
19	594802Y	UÇ ÇERÇEVE	END PIECE		6		1		
20	594801Y	ARA ÇERÇEVE	INTERMEDIARY PIECE		4		1		
21	596121Y	ETİKET-ÖN ISITICI	INSERT - PREHEATER		1		1		
22	TU252146Y	DİJİTAL TERMOSTAT	DIGITAL THERMOSTAT		1		1		
23	595132Y	ETİKET- KALORİFER	INSERT- HEATER		1		1		
25	511201Y	SİVİÇ	SWITCH - PUSH		3		1		
26	596273Y	KAPAK	COVER		3		1		
27	511018Y	SİVİÇ	SWITCH - PUSH		13		1		
28	7607006121	KUĞU MİKROFON	MICROPHONE		1		1		BLAUPUNKT
29	63336-70049-70	AYNA KUMANDA SİVİCİ	SWITCH- MIRROR		1		1		6GM 500 212-0001 WILKE
34	511503Y	PİLOT LAMBASI	LAMP PILOT		4		1		
35	595146Y	ETİKET - MOTOR ISITMA	INSERT - IDLE		1		1		
36	591844Y	ETİKET - INTARDER	INSERT - INTARDER		1		1		
38	596649Y	ETİKET - ÖN SİS	INSERT - FR LAMP CLEARENCE		2		1		
39	595341Y	ETİKET - ASR	INSERT - ASR		2		1		
40	596626	ETİKET - ARKA SİS	INSERT -RR CLEARANCE		2		1		
41	596152Y	ETİKET - KAPI HAVA	INSERT - DOOR AIR				120404		
43	595440Y	ETİKET - AYNA ISITICI	INSERT - MIRROR HEATING		1		1		
44	596639Y	ETİKET - GECE AYDINLATMA	INSERT - LAMP		1		1		
45	64153-90720-59Y	SİVİÇ PANELİ	PANEL SWITCH		1		120404		
46	64153-90720-58Y	SİVİÇ PANELİ	PANEL SWITCH		1		1		

TEMSA	Ön kumanda siviçleri Front switches	Drw.no : 64153-94000-70 Vehicle Model: **TB162X, TB162Y** **TB163X, TB163Y**	**26-052** RevDate: Page: 2

Pos	Part Number	Turkish	English	German	Qty	R/P	From	Up To	Original Number Supplier
47	596641Y	ETİKET - İÇ AYDINLATMA	INSERT - ROOM LAMP		2		1		
49	595140Y	ETİKET- MOTOR FAN	INSERT - MOTOR FAN		1		1		
50	596637Y	ETİKET-SÜRÜCÜ AYDINLATMA	INSERT- DRIVERS LAMP		1		1		
51	64103-90983-01Y	ETİKET	INSERT		1		1		
53	596651Y	ETİKET - KORİDOR LAMBASI	INSERT - AISLE LAMP		1		1		
54	TY250122Y	ACİL STOP BUTONU	BUTTON-EMERGENCY STOP		1		161204		
56	595420Y	ETİKET- TUVALET	INSERT - TOILET		1		161204		OPTION
57	596222Y	ETİKET - TUVALET TANK	INSERT - TOILET TANK		1		161204		OPTION
58	TY254116Y	ETİKET- FREN BALATASI	INSERT-BRAKE LINNING		1		120404		
59	TM250179Y	ZAMANLAYICI ÖN ISITICI	TIMER PREHEATER		1		120404		Eberspaecher
59	TC250179Y	ZAMANLAYICI ÖN ISITICI	TIMER PREHEATER		1		120404		Webasto
60	7607022001	MİKROFON YUVASI	SEAT MICROPHONE		1		150105		BLAUPUNKT
61	7607006116	MİKROFON TUTUCU	MOUNTING MICROPHONE		1		150105		BLAUPUNKT
62	7607006110	MİKROFON	MICROPHONE		1		150105		BLAUPUNKT
63	7607006113	KABLO	CABLE		1		150105		BLAUPUNKT
64	7607006118	KABLO	CABLE		1		150105		BLAUPUNKT
65	593624Y	ETİKET- KNEELING	INSERT - KNEELING		1		150105		OPTION
66	511150Y	SİVİÇ	SWITCH		1		150105		OPTION

TEMSA	Yan kumanda kutusu- 15.05.2004 e kadar Side switch box - up to 2004' 05.15 Seiten Steuerungskasten	Group No : 26-060 Draw. Num. : x Rev. Date :
	Vehicle Model: TB162W, TB162Z, TB163W, TB163Z,	Page : 1

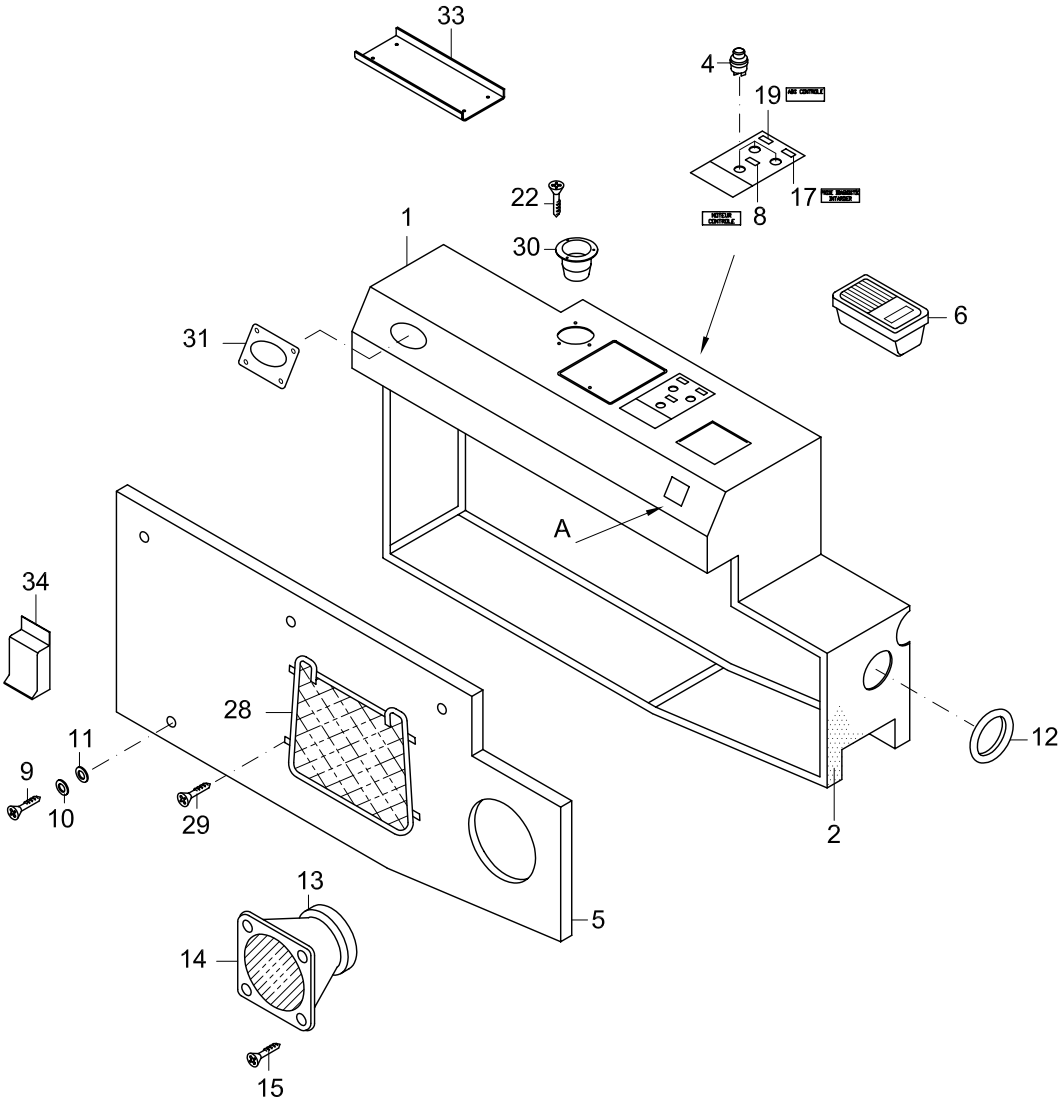

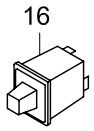

A- BAKIŞI
VIEW - A

TEMSA	Yan kumanda kutusu- 15.05.2004 e kadar Side switch box - up to 2004' 05.15 Seiten Steuerungskasten	Drw.no 64103-94000-70 Vehicle Model: **TB162W - TB162Z** **TB163W - TB163Z**	**26-060** RevDate: Page: 1

Pos	Part Number	Turkish	English	German	Qty	R/P	From	Up To	Original Number Supplier
1	64103-96026-73Y	YAN KUMANDA KUTUSU	SIDE SWITCH BOX		1		1		
2	TES40451-03Y	SUNİ DERİ	LEATHER		AR		1		
4	64317-60100-10Y	BUTON	BUTTON		3		1		
5	64103-91010-01Y	KAPAK	LID		1		1		
6	65119-60060-40	KÜLLÜK	ASH TRAY		1		1		
8	64103-90982-28Y	ETİKET-MOTOR KONTROL	LABEL - MOTOR CONTROL		1		1		
9	TF200057Y	CIVATA	BOLT		AR		1		
10	MF450403Y	RONDELA	WASHER SPRING		AR		1		
11	MF450192Y	PUL	WASHER PLAIN		AR		1		
12	MA275667Y	GROMET	GROMMET		1		1		
13	MC857394Y	HOPARLÖR	SPEAKER		1		1		
14	64103-31430-39Y	HOPARLÖR KAPAĞI	COVER SPEAKER		1		1	14.07.04	
14	64103-31430-40Y	HOPARLÖR KAPAĞI	COVER SPEAKER		1		14.07.04		
15	TC242892Y	VİDA	SCREW		AR		1		
16	63336-70049-70	DIŞ AYNA SİVİCİ	SWITCH MIRROR OUTSIDE		1		1		
17	64103-90982-50Y	ETİKET-INTARDER	LABEL-INTARDER		1		1		
19	64103-90982-27Y	ETİKET -ABS	LABEL-ABS		1		1		
22	TF457583Y	VİDA	SCREW		AR		1		
28	63258-30120-70Y	FİLE	DOCUMENT NET		1		1		
29	MF457236Y	VİDA	SCREW		AR		1		
30	63272-60040-80Y	BARDAKLIK	GLASS HOLDER		1		1		
31	81.96410-0614	KAPAK - DIAGNOS SOKET	COVER-DIAGNOS SOCKET		1		1		
33	64103-91440-33Y	BRAKET	BRACKET		1		1		
40	TM250179Y	WEBASTO AYARLAMA	WEBASTO TIMER		1		1		

TEMSA	Yan kumanda kutusu - 15.05.2004 den sonra Side switch box - after 2004' 05.15 Seiten Steuerungskasten	Group No : 26-061 Draw. Num. : x Rev. Date : Page : 1
	Vehicle Model: TB162W, TB162Z, TB163W, TB163Z,	

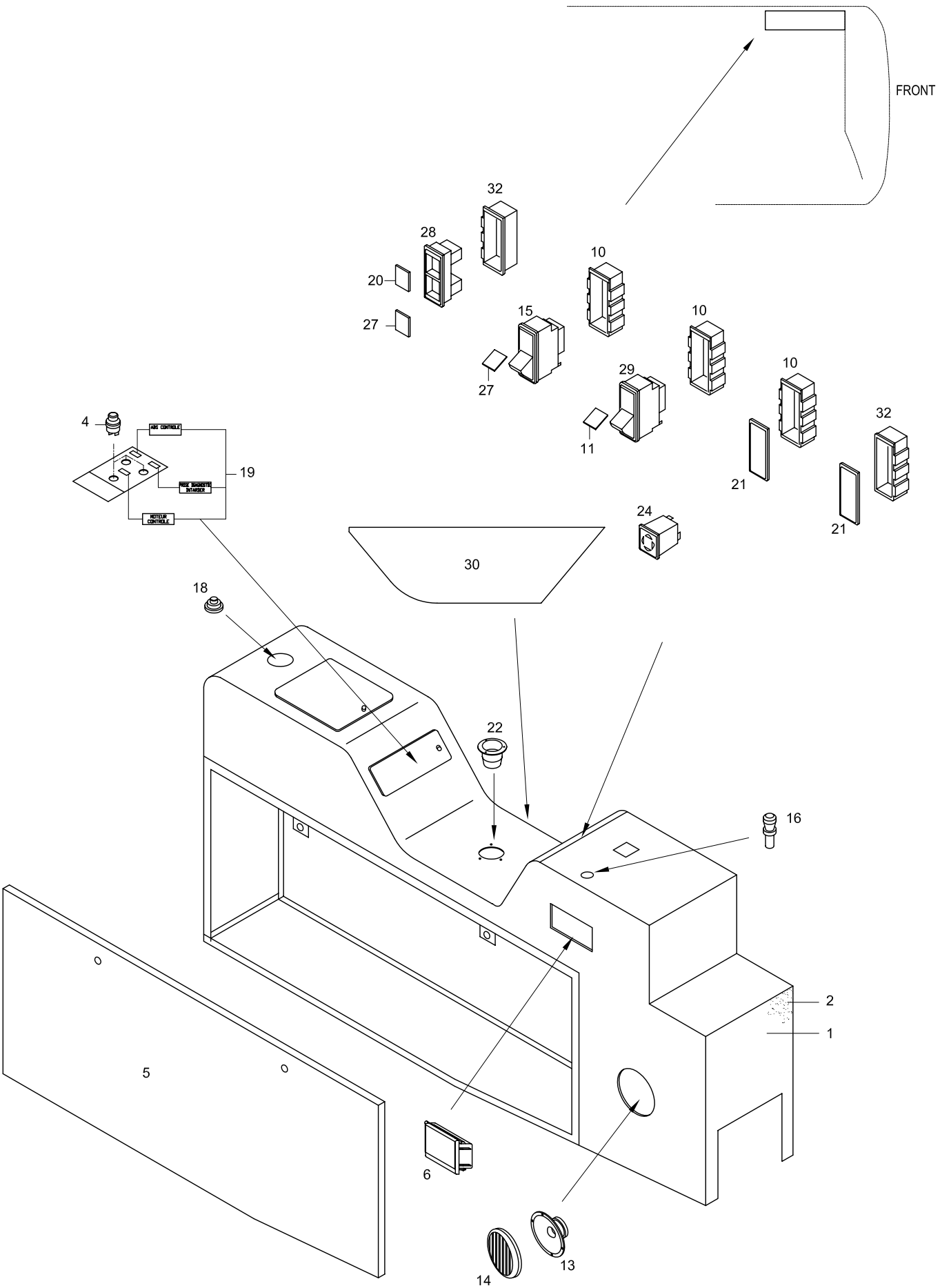

TEMSA	Yan kumanda kutusu - 15.05.2004 den sonra Side switch box - after 2004' 05.15 Seiten Steuerungskasten	Drw.no 64103-96440-71 Vehicle Model: **TB162W - TB162Z** **TB163W - TB163Z**	**26-061** RevDate: Page: 1

Pos	Part Number	Turkish	English	German	Qty	R/P	From	Up To	Original Number Supplier
1	64103-94026-77Y	YAN KUMANDA KUTUSU	SIDE SWITCH BOX		1		1		
2	TES40451-03AY	SUNİ DERİ	LEATHER		AR		1		
4	64317-60100-10Y	BUTON	BUTTON		3		1		
5	64103-91010-03Y	KAPAK	LID		1		1		
6	64163-90570-03	KÜLLÜK	ASH TRAY		1		1		
10	594801Y	ORTA YUVA			3		1		
11	595377Y	ETİKET - OTO. ŞANZUMAN	INSERT - AUT. TRANSMISSION		1		1		
13	MC857394Y	HOPARLÖR	SPEAKER		1		1		
14	64103-31430-40Y	HOPARLÖR KAPAĞI	COVER SPEAKER		1		1		
15	511059	BUTON	BUTTON		1		1		OPTION
16	64159-10010-T1	ÇAKMAK KOMPLE			1		1		
16	64159-10010-T2	ÇAKMAK KOMPLE			1		1		
18	81.96410-0614	DIAGNOS SOKET KAPAĞI			1		1		MAN
19	64103-90980-93Y	ETİKET	INSERT		1		1		
20	596620Y	ETİKET	INSERT		1		1		OPTION
21	596273Y	KAPAK	COVER		3		1		
22	63272-60040-80Y	BARDAKLIK	GLASS HOLDER		1		1		
24	63336-70049-70	AYNA KUMANDA SİVİCİ	SWITCH- MIRROR		1		1		
27	595130Y	ETİKET	INSERT		1		1		OPTION
28	511503Y	PİLOT LAMBASI	LAMP PILOT		1		1		OPTION
29	511018Y	SİVİÇ	SWITCH - PUSH		1		1		
30	TY150190Y	PANEL - ABS	PANEL - ABS		1		1		
32	594802Y	UÇ ÇERÇEVE	END PIECE		2		1		

TEMSA	Yan kumanda kutusu Side Switch Box Seiten Steuerungskasten	Group No : 26-062 Draw. Num. : x Rev. Date : Page : 1
	Vehicle Model: TB162X, TB162Y, TB163X, TB163Y,	

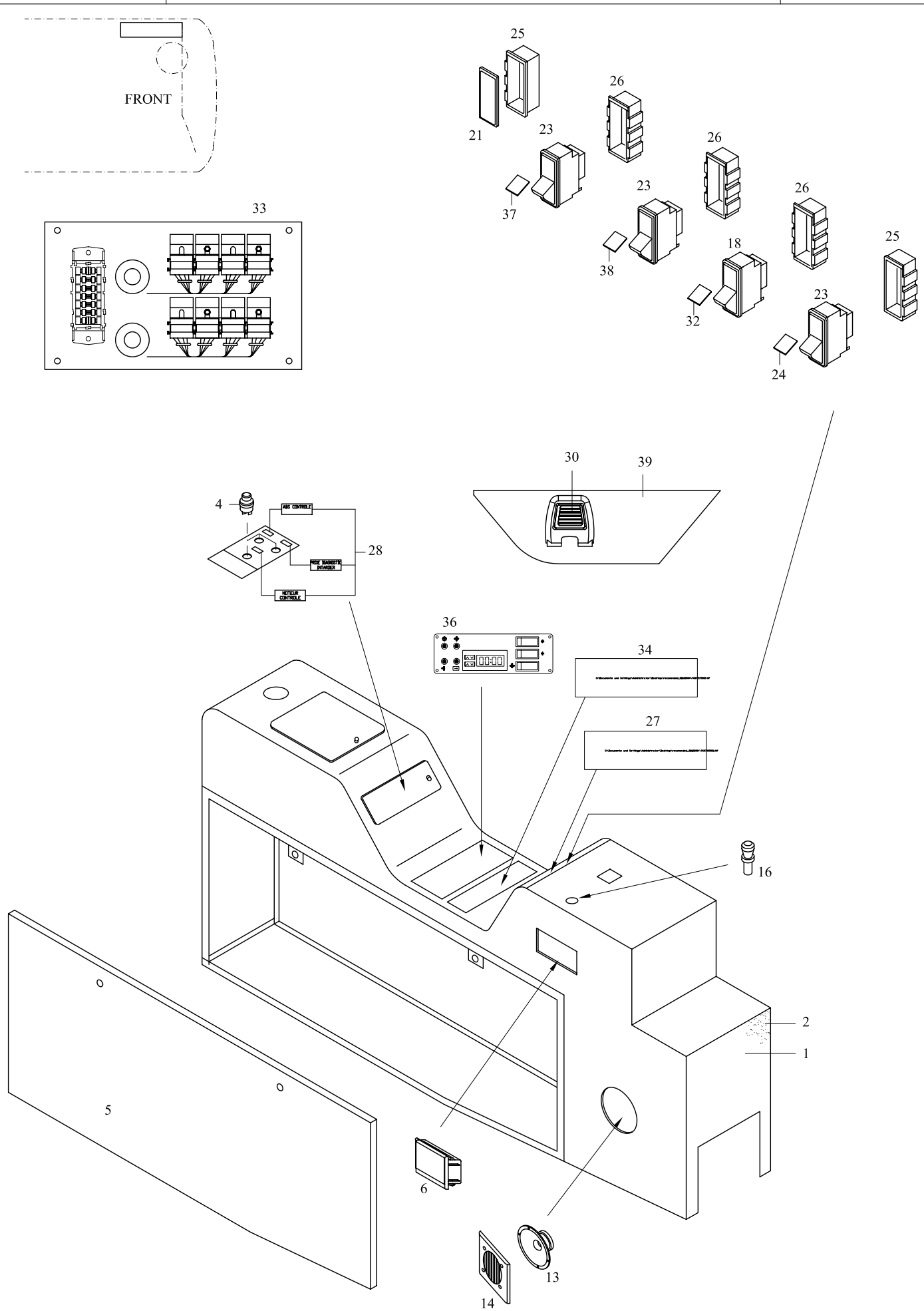

TEMSA	Yan kumanda kutusu Side switch box	Drw.no 64103-94000-72 Vehicle Model: **TB162X - TB162Y** **TB163X - TB163Y**	**26-062** RevDate: Page: 1

Pos	Part Number	Turkish	English	German	Qty	R/P	From	Up To	Original Number Supplier
1	64103-94026-76Y	YAN KUMANDA KUTUSU	SIDE SWITCH BOX		1		150404		
2	TES40451-03AY	SUNİ DERİ	LEATHER		AR		1		
4	64317-60100-10Y	BUTON	BUTTON		3		1		
5	64103-91010-03Y	KAPAK	LID		1		1		
6	64163-90570-03Y	KÜLLÜK	ASH TRAY		1		150404		
13	MC857394Y	HOPARLÖR	SPEAKER		1		1		
14	64103-31430-40Y	HOPARLÖR KAPAĞI	COVER LOUDSPEAKER		1		1		
16	64159-10010-T2Y	ÇAKMAK	LIGHTER		1		150404		
18	511018Y	SİVİÇ - AÇ-KAPA	SWITCH - ON/OFF		1		1		
21	596273Y	KAPAK	COVER		2		1		
23	511111Y	SİVİÇ - AÇ-KAPA	SWITCH - ON/OFF		1		1		
24	595144Y	ETİKET- OKUL	INSERT - SCHOOL		1		1	?	
25	594802Y	SİVİÇ YUVASI	MOUNTING		2		1		
26	594801Y	SİVİÇ YUVASI	MOUNTING		2		1		
27	7607005030	RADYO/CD (CRC41)	RADIO/CD		1		1		BLAUPUNKT
27	7607005031	RADYO/CD (CRD 41)	RADIO/CD		1		1		BLAUPUNKT
28	64103-90980-93Y	ETİKET-MOTOR KONTROL	LABEL - MOTOR CONTROL		1		1		
30	63272-90040-80Y	BARDAKLIK	GLASS HOLDER		1		150404		
31	81.96410-0614	KAPAK - DIAGNOS SOKET	COVER-DIAGNOS SOCKET		1		1		
32	595143Y	ETİKET-GÜZERGAH TABELASI	INSERT-DISPLAY SIGN		1		1		
33	64422-94047-77Y	RÖLE PANELİ KOMPLE	RELAY PANEL ASSY		1		150404		
34	7607272002	SES YÜKSELTİCİ	AMPLIFIER		1		150404		BLAUPUNKT
36	62305-90020-10X	KLİMA KONTROL PANELİ	A/C CONTROL UNIT		1		1		Safkar 55 25 00062
37	595111Y	ETİKET - DURAK FRENİ	INSERT - HALT BRAKE		1		1		
38	595377Y	ETİKET- OTOMATİK ŞANZUMAN	INSERT- AUTOMATIC TRANSMISSION		1		150404		
39	TY150190Y	PANEL - ABS	PANEL - ABS		1		150404		

TEMSA	Ön kumanda paneli trimi Dashboard and front lower trim Trimm, Vordere Steuerungspaneele	Group No : 26-070 Draw. Num. : Rev. Date : Page : 1
	Vehicle Model: TB162W, TB162Z, TB162X, TB162Y, TB163W, TB163Z, TB163X, TB163Y	

OPTION

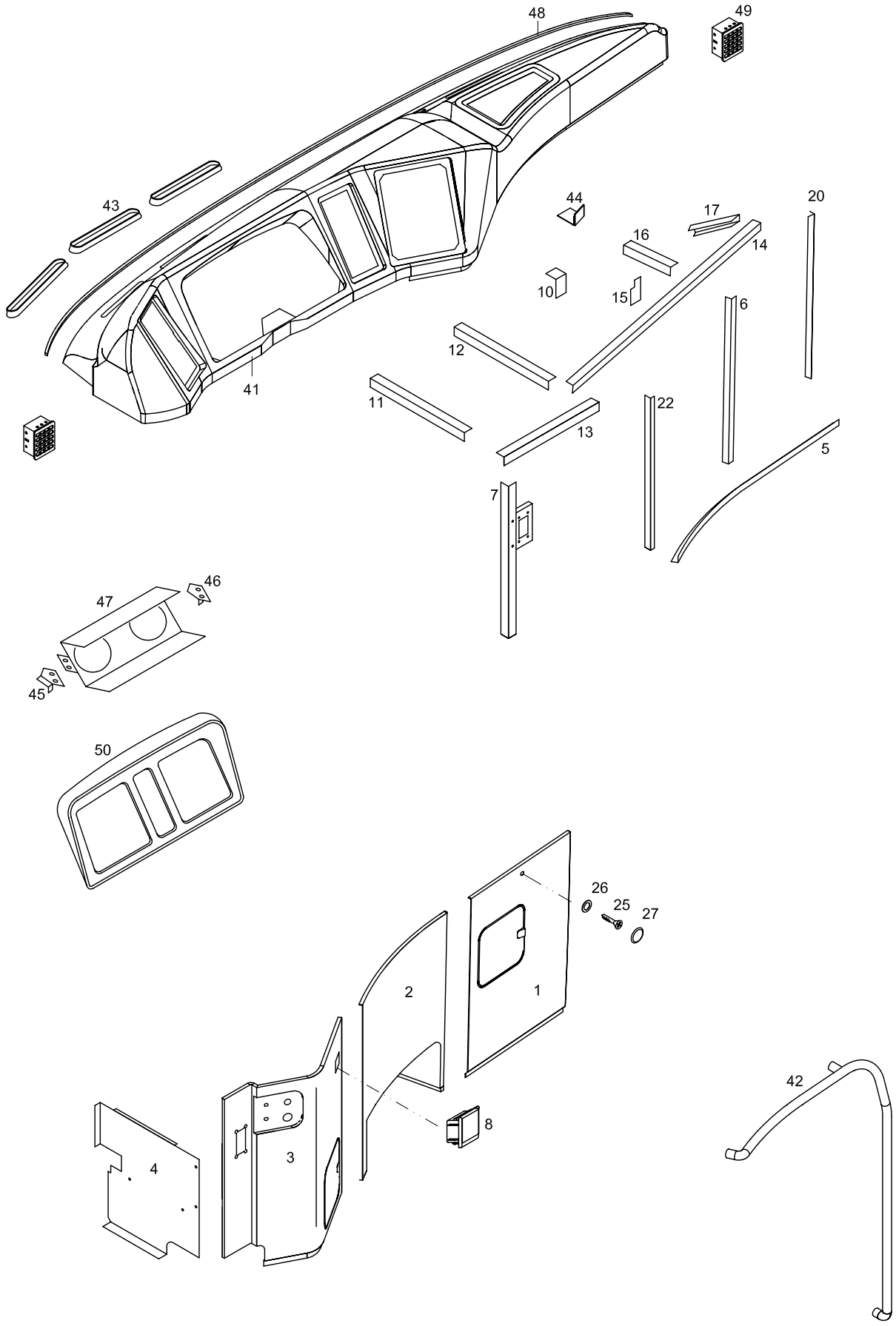

TEMSA	Ön kumanda paneli trimi Dashboard and front lower trim Trimm, Vordere Steuerungspaneele	Group No : 26-070 Draw. Num. : Rev. Date : Page : 2
	Vehicle Model: TB162W, TB162Z, TB162X, TB162Y, TB163W, TB163Z, TB163X, TB163Y	

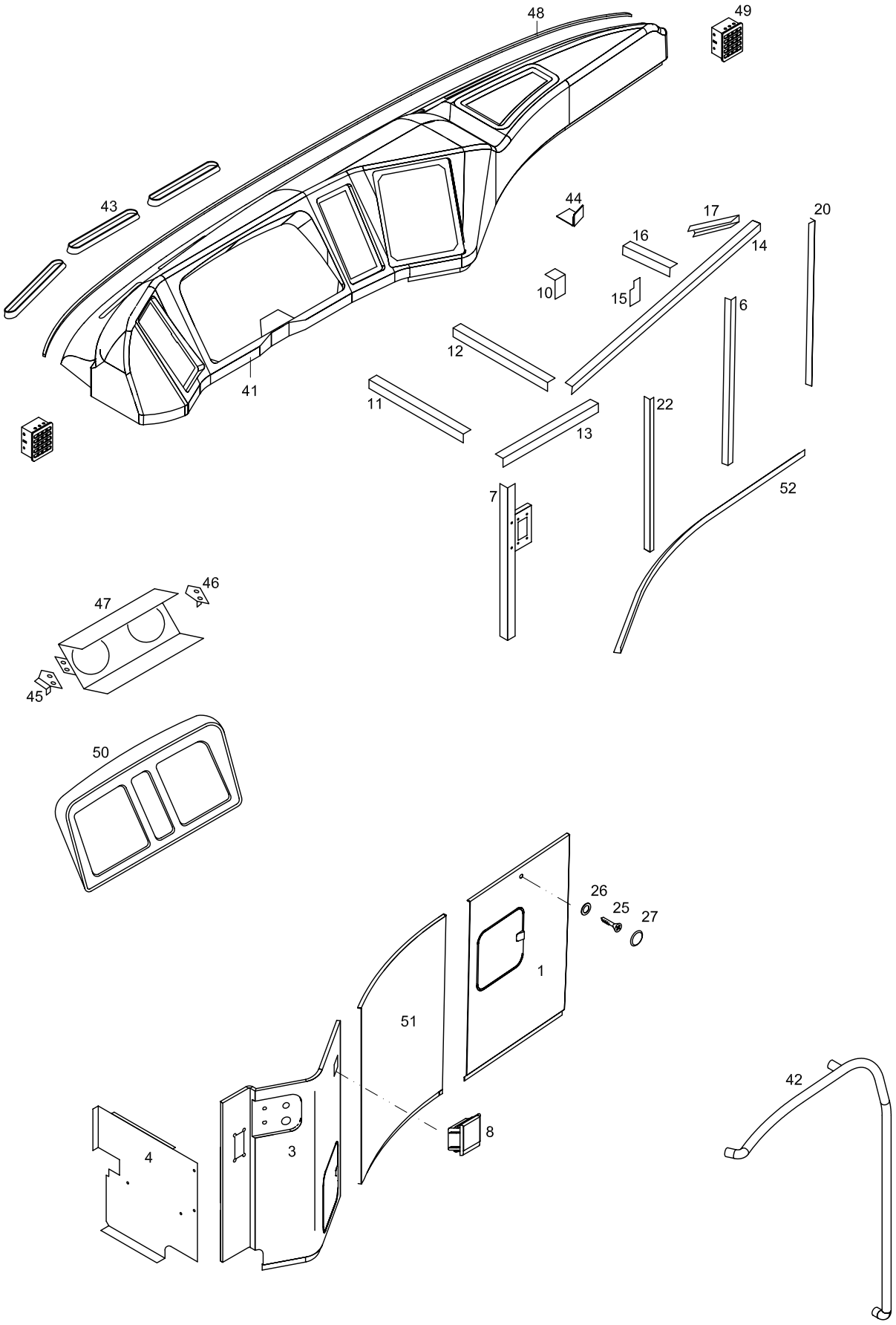

TEMSA	Ön kumanda paneli trimi Dashboard and front lower trim Trimm, Vordere Steuerungspaneele	Drw.no: Vehicle Model: TB162W, TB162Z, TB162X, TB162Y TB163W, TB163Z, TB163X, TB163Y	26-070 RevDate: Page: 1

Pos	Part Number	Turkish	English	German	Qty	R/P	From	Up To	Original Number Supplier
1	64163-90520-70Y	KONTROL PANELİ ALT KAPAĞI	DASBOARD, UNDER LID		1		1		
2	64163-90530-71Y	KONTROL PANELİ ALT KAPAĞI	DASBOARD, UNDER LID		1		1		OPTION
3	64163-90540-71Y	KONTROL PANELİ ALT KAPAĞI	DASBOARD, UNDER LID		1		1	200404	
3	64163-90540-72Y	KONTROL PANELİ ALT KAPAĞI	DASBOARD, UNDER LID		1		200404		
4	64163-70580-70Y	KONTROL PANELİ ALT KAPAĞI	DASBOARD, UNDER LID		1		1		
5	64163-90570-10Y	L-PLAKA	PLATE-L		1		1		OPTION
6	64163-70570-02BY	L-PLAKA	PLATE-L		1		1		
7	64163-70570-71Y	L-PLAKA	PLATE-L		1		1		
8	64163-90570-03Y	KÜLLÜK	ASH TRAY		1		1		
10	64163-70560-78Y	L-PLAKA	PLATE-L		1		1		
11	64163-70560-71Y	L-PLAKA	PLATE-L		1		1		
12	64163-70560-73BY	L-PLAKA	PLATE-L		1		1		
13	64163-70560-72BY	L-PLAKA	PLATE-L		1		1		
14	64163-70560-74BY	L-BRAKET	BRACKET-L		1		1		
15	64163-70560-77Y	L-BRAKET	BRACKET-L		1		1		
16	64163-70560-75AY	L-BRAKET	BRACKET-L		1		1		
17	64163-70560-76AY	L-BRAKET	BRACKET-L		1		1		
20	MC258338-02Y	L-BRAKET	PLATE EDGE		MT		1		L:1200mm
22	64163-90570-07Y	L-BRAKET	BRACKET-L		1		1		
25	MF457597Y	VİDA	SCREW TAPPING		4		1		4.2*25
26	MK195239Y	ÖZEL PUL	WASHER		4		1		
27	MK230245	VİDA BAŞLIĞI	SCREW CAP		4		1		
41	64163-94500-70Y	KONTROL PANELİ	DASHBOARD		1		1	030804	
41	64163-94500-75Y	KONTROL PANELİ	DASHBOARD		1		030804		
42	64163-90550-70Y	TUTAMAK	GRAP		1		1	010205	
42	64163-92550-70Y	TUTAMAK	GRAP		1		010205		
43	64163-70560-70Y	MENFEZ	NOZZLE		7		1		
44	64163-70620-70Y	L-PLAKA	PLATE-L		4		1		
45	64163-90570-02Y	SOL DESTEK	SUPPORT LH		1		1		
46	64163-90570-01Y	SAĞ DESTEK	SUPPORT RH		1		1		
47	64163-90570-72AY	DESTEK	SUPPORT		1		1	260504	
47	64163-90570-74Y	DESTEK	SUPPORT		1		260504		
48	MC339638-05Y	FİTİL	WEATHER STRIP		AR		1		
49	TM101177Y	MENFEZ	GRILLE		2		1		
50	64163-90510-70Y	GÖSTERGE PANELİ ÇERÇEVESİ	GARNISH METER		1		1		

TEMSA	Ön kumanda paneli trimi Dashboard and front lower trim Trimm, Vordere Steuerungspaneele	Drw.no: Vehicle Model: TB162W, TB162Z, TB162X, TB162Y TB163W, TB163Z, TB163X, TB163Y	26-070 RevDate: Page: 2

Pos	Part Number	Turkish	English	German	Qty	R/P	From	Up To	Original Number Supplier
51	64163-70530-70Y	KONTROL PANELİ ALT KAPAĞI	DASBOARD, UNDER LID		1		1		
52	64163-70570-06Y	L-PLAKA	PLATE-L		1		1		

27 CAMLAR
WINDOWS
x

27-010	Ön ve arka cam Windscreen and rear window x	TB162W TB163W	TB162Z TB163Z	TB162X TB163X	TB162Y TB163Y
27-020	Yan camlar Side windows x	TB162W TB163W			
27-021	Yan camlar Side windows x		TB162Z TB163Z		
27-022	Yan camlar Side windows x			TB162X TB163X	
27-023	Yan camlar Side windows x				TB162Y TB163Y
27-030	Sürücü camı Drivers window x	TB162W TB163W	TB162Z TB163Z	TB162X TB163X	TB162Y TB163Y
27-040	Panorama cam ve yağmur oluğu Window panorama & drip moulding x	TB162W TB163W	TB162Z TB163Z	TB162X TB163X	TB162Y TB163Y
27-050	Çift cam dayama profilleri Double glazed glass frame x	TB162W TB163W			
27-051	Çift cam dayama profilleri Double glazed glass frame x		TB162Z TB163Z		

TEMSA	Ön ve arka cam Windscreen and rear window	Group No : 27-010 Draw. Num. : x Rev. Date : Page : 1
	Vehicle Model: TB162W, TB162Z, TB162X, TB162Y, TB163W, TB163Z, TB163X, TB163Y	

FRONT

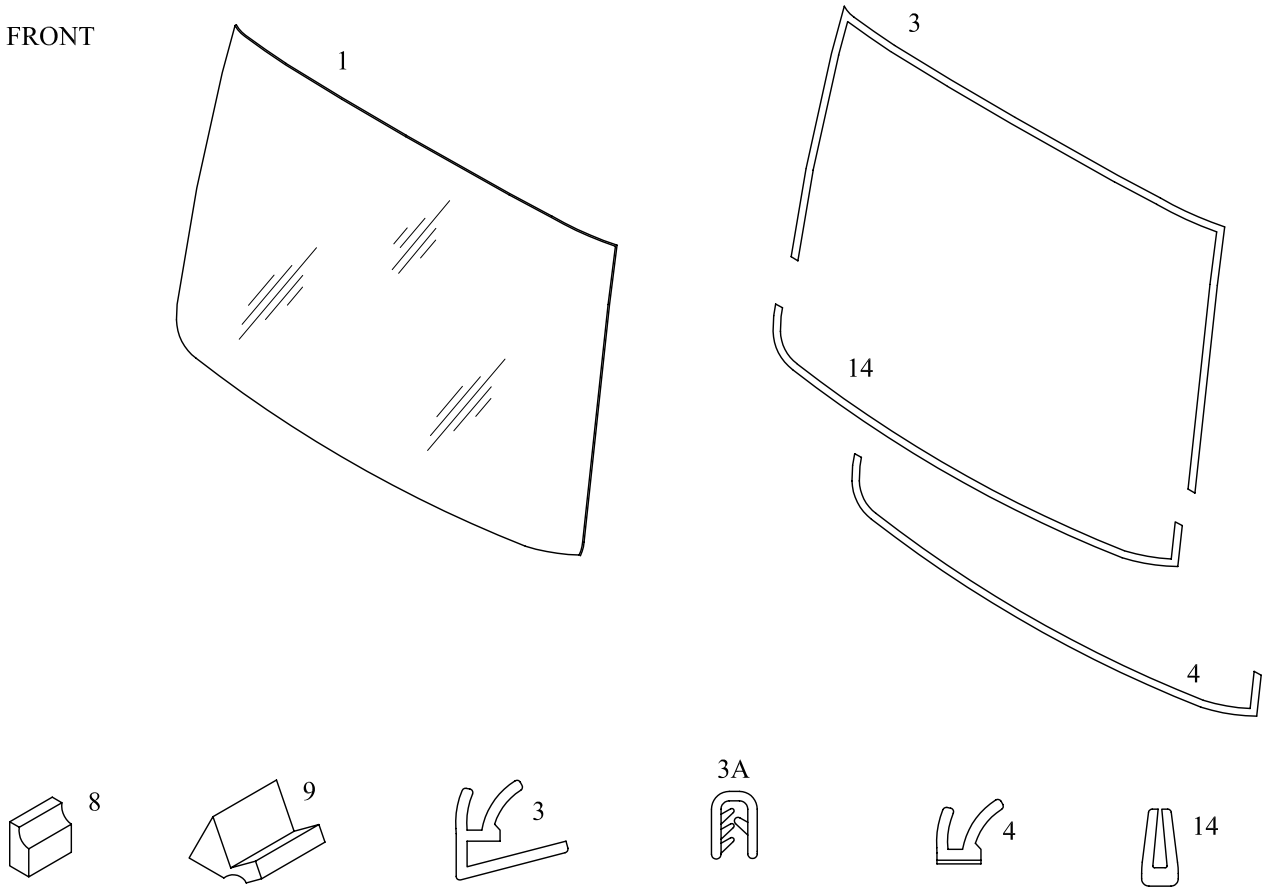

REAR

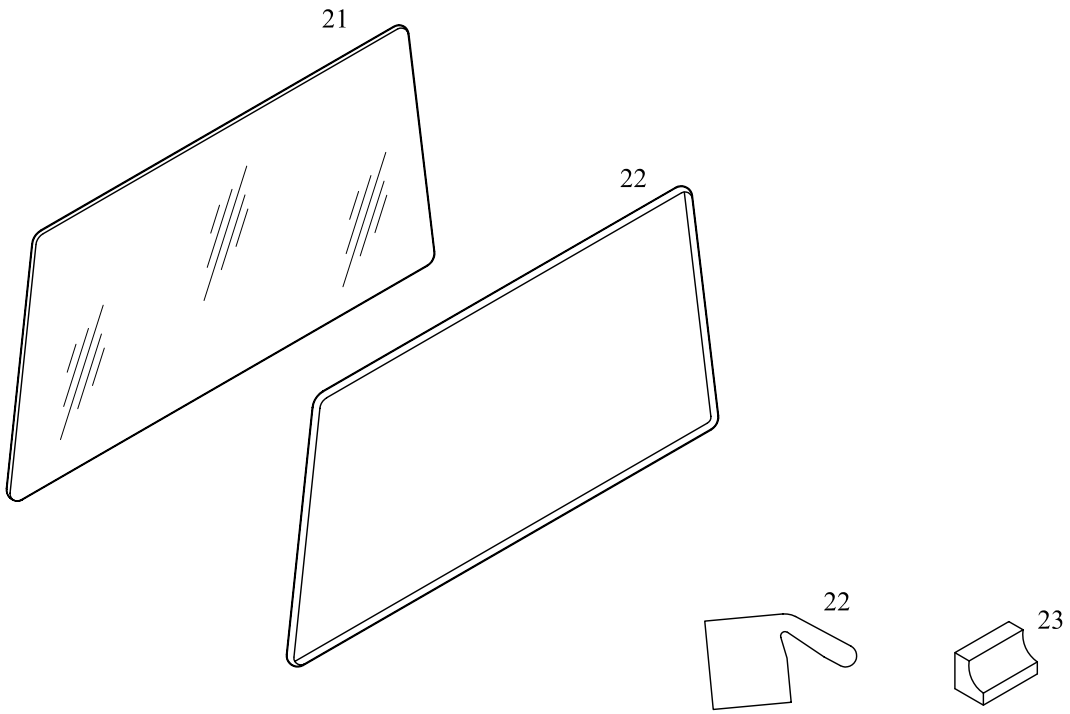

TEMSA	Ön ve arka cam Windscreen and rear window	Drw.no: MC299370-022 / 73108--90000-70 Vehicle Model: **TB162W, TB162Z, TB162X, TB162Y** **TB163W, TB163Z, TB163X, TB163Y**	**27-010** RevDate: Page: 1

Pos	Part Number	Turkish	English	German	Qty	R/P	From	Up To	Original Number Supplier
1	MC281682Y	ÖN CAM	WINDSCREEN		1		1		
3	MC208910Y	ÖN CAM FİTİLİ	DAM WINDOW		1		1	301104	
3A	TC395014Y	ÖN CAM FİTİLİ	DAM WINDOW		1		301104		
4	MB106791Y	ÖN CAM FİTİLİ	DAM WINDOW		1		1		
8	MC259203Y	TAKOZ	SPACER		2		1		
9	MC259204Y	TAKOZ	SPACER		2		1		
14	MC339638-05Y	ÖN CAM FİTİLİ	DAM WINDOW		1		1		
21	73103-90000-02Y	ARKA CAM	REAR WINDOW		1		1		
22	TC375959DY	ARKA CAM FİTİLİ	DAM WINDOW		1		1		
23	73103-90000-03Y	TAKOZ	SPACER		1		1		

TEMSA	Yan camlar Side window glass	Group No : 27-020 Draw. Num. : x Rev. Date : Page : 1
	Vehicle Model: TB162W, TB163W	

BIYC031

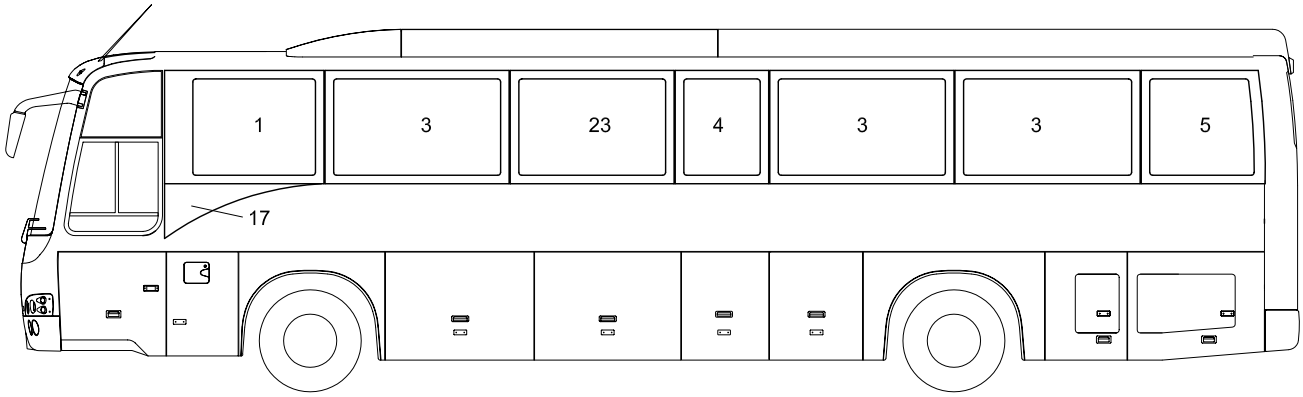

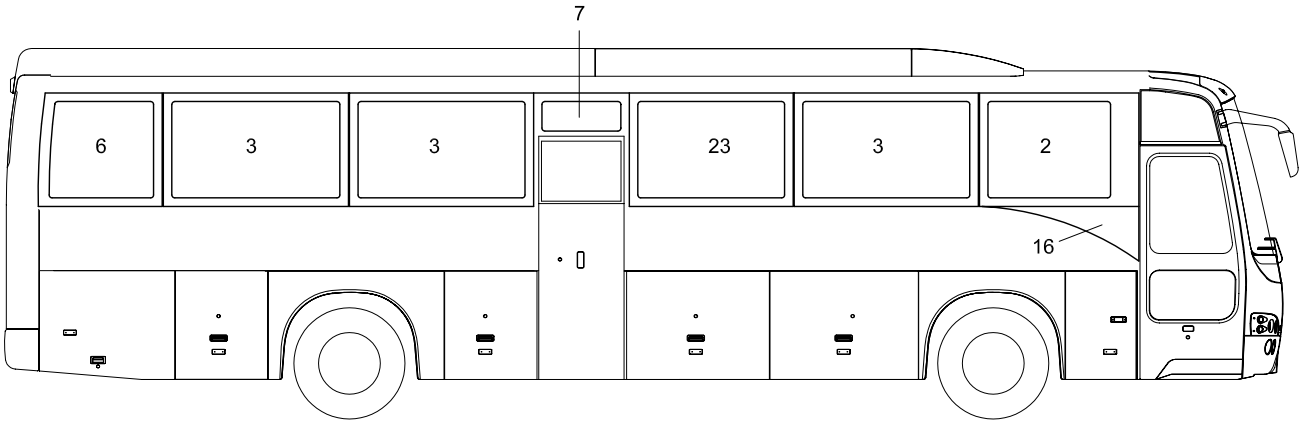

BIYC032

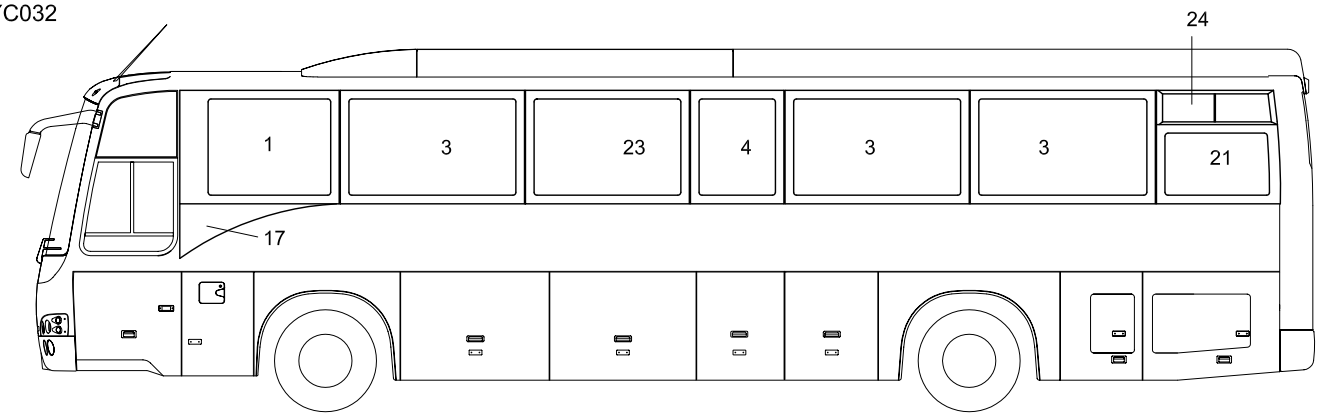

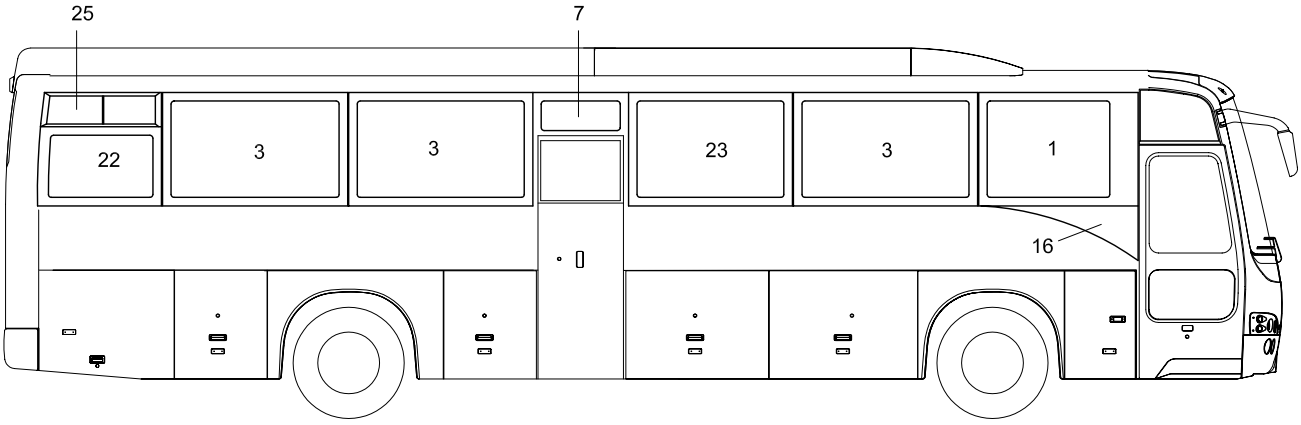

TEMSA	Yan camlar Side window glass	Group No : 27-020 Draw. Num. : x Rev. Date : Page : 2
	Vehicle Model: TB162W, TB163W	

BYCS032

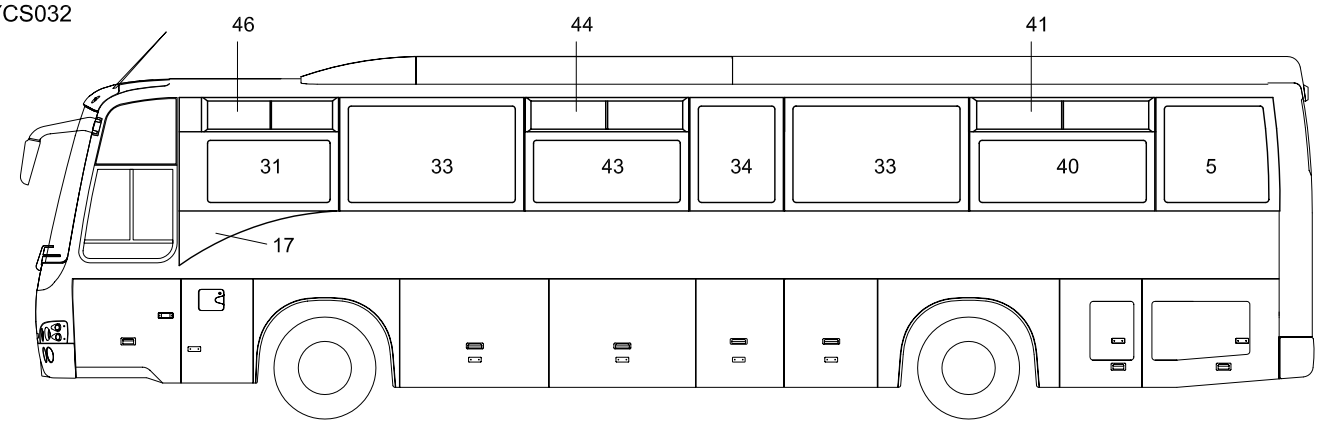

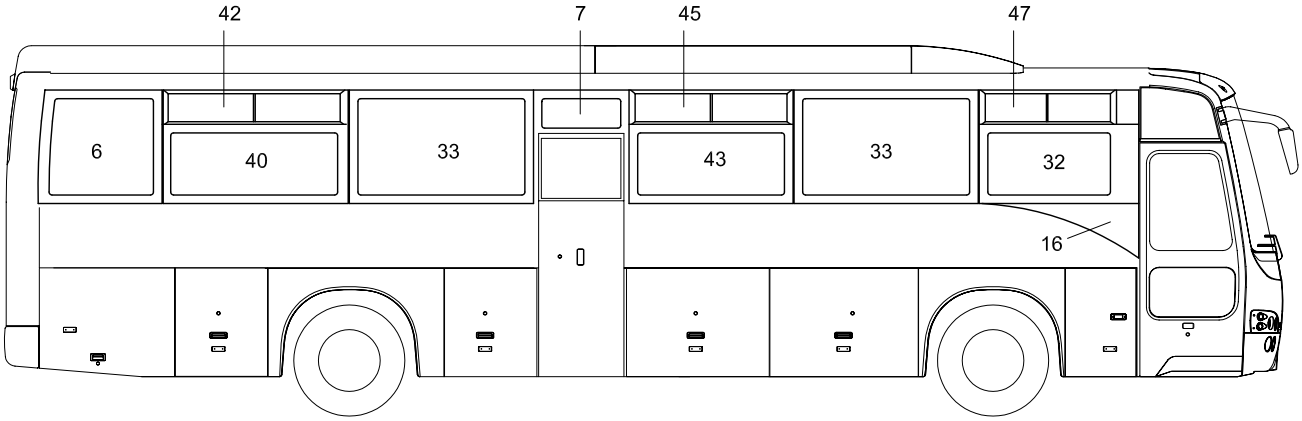

BYCS035

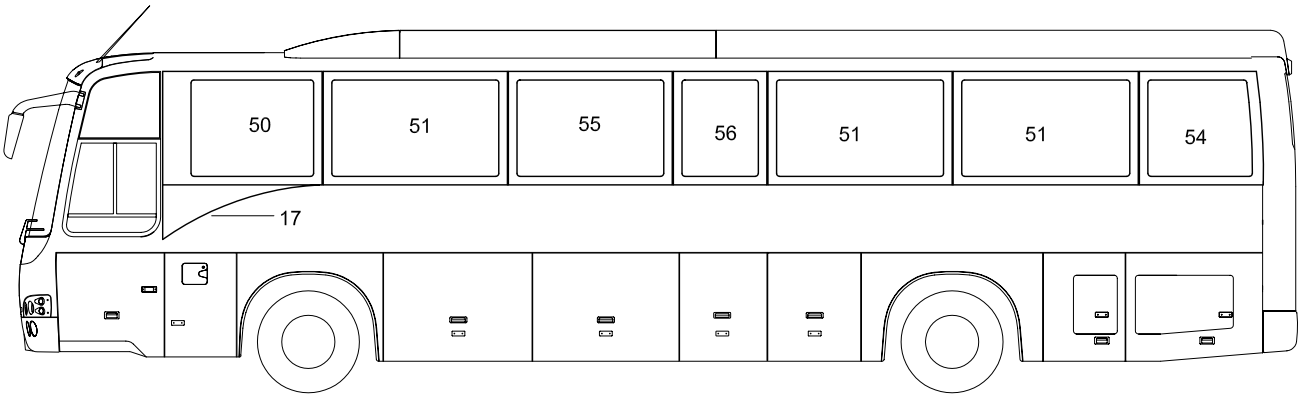

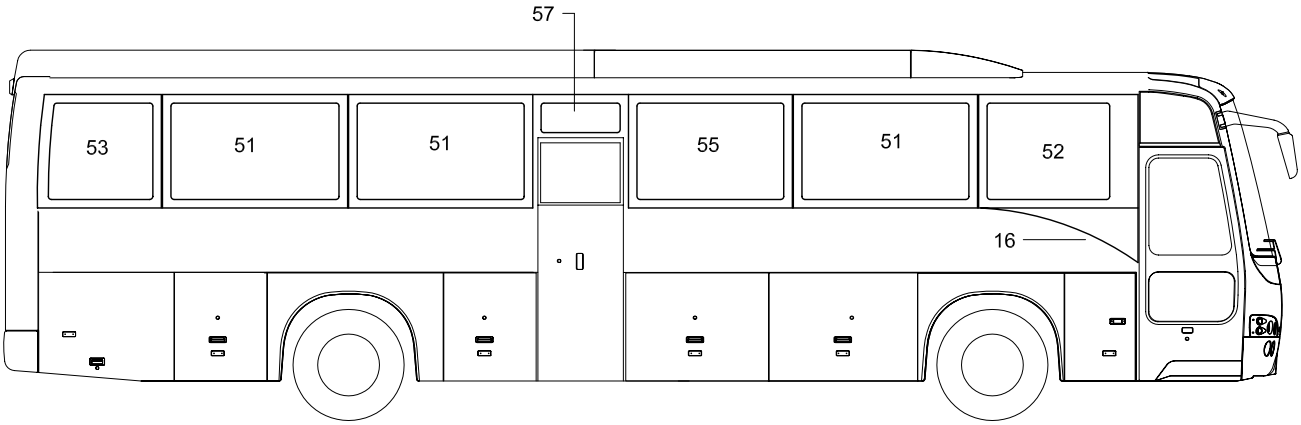

BYCS03ISR - ISRAEL

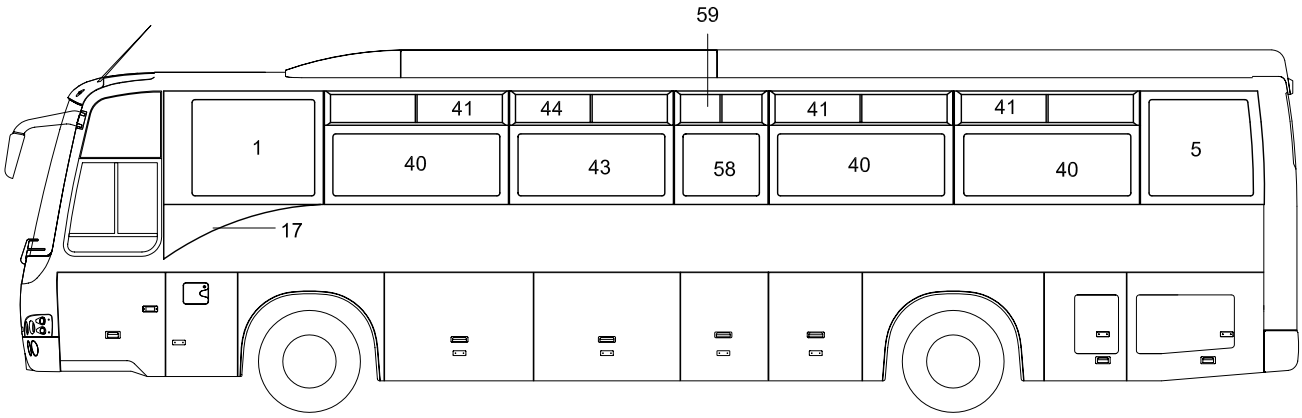

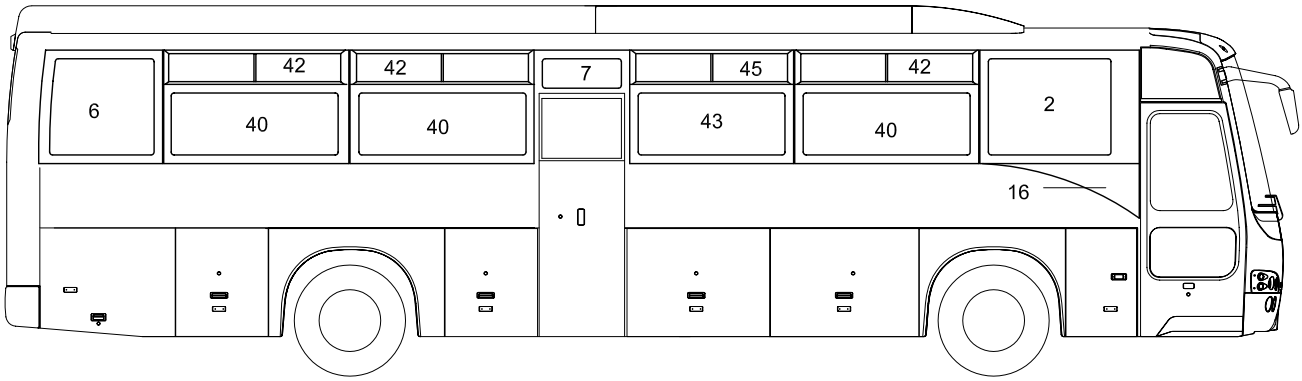

BYCS031

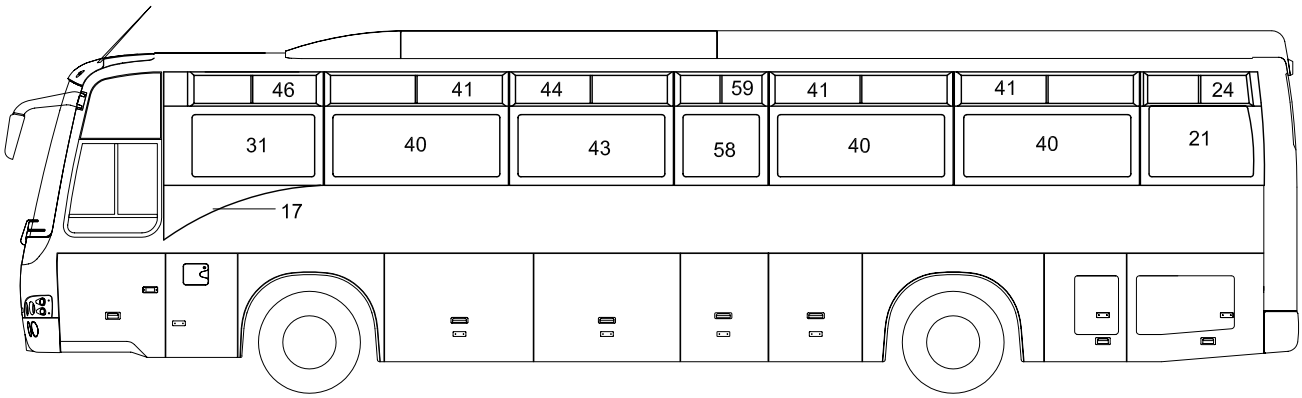

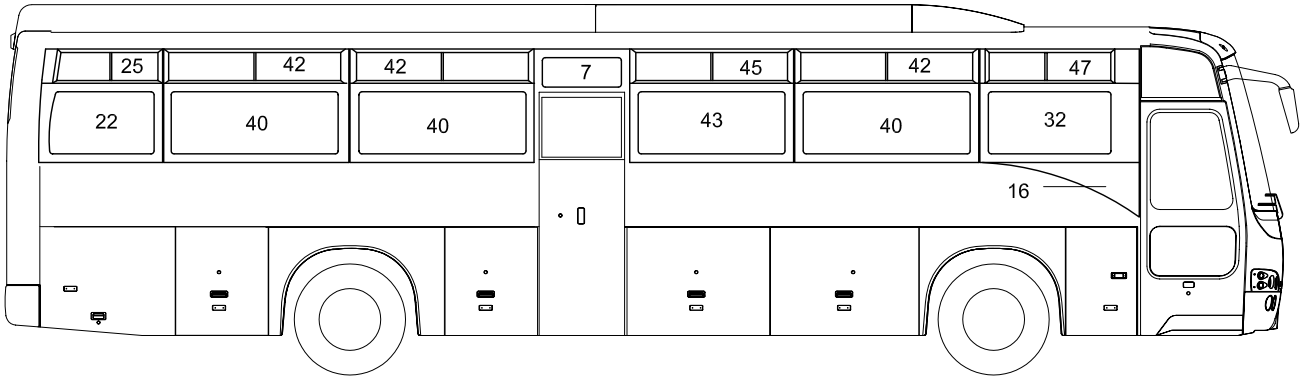

TEMSA	Yan camlar Side window glass	63104-96000-70/75/ -96100-70/72/-96300-70 Vehicle Model: **TB162W** **TB163W**	**27-020** RevDate: Page: 1

Pos	Part Number	Turkish	English	German	Qty	R/P	From	Up To	Original Number Supplier
1	63104-90120-01Y	YAN CAM	SIDE WINDOW GLASS		1		1		
2	63104-90120-02Y	YAN CAM	SIDE WINDOW GLASS		1		1		
3	63104-90110-03Y	YAN CAM	SIDE WINDOW GLASS		6		1		
4	63104-96000-04Y	YAN CAM	SIDE WINDOW GLASS		1		1		
5	63104-96000-05Y	YAN CAM	SIDE WINDOW GLASS		1		1		
6	63104-96000-06Y	YAN CAM	SIDE WINDOW GLASS		1		1		
7	63104-96000-07Y	YAN CAM	SIDE WINDOW GLASS		1		1		
8	63104-90020-09AY	TAKOZ	SPACER		AR		1		
16	63104-90120-16Y	CAM - SAĞ	GLASS - RH		1		1		
17	63104-90120-17Y	CAM - SOL	GLASS - LH		1		1		
21	63104-97100-21Y	YAN CAM	SIDE WINDOW GLASS		1		1		
22	63104-97100-22Y	YAN CAM	SIDE WINDOW GLASS		1		1		
23	63104-96000-23Y	YAN CAM	SIDE WINDOW GLASS		2		1		
24	63104-97100-28Y	SÜRGÜLÜ CAM KOMPLE	SLIDE WINDOWS ASSY		1		1		
25	63104-97100-29Y	SÜRGÜLÜ CAM KOMPLE	SLIDE WINDOWS ASSY		1		1		
31	63104-90016-01Y	YAN CAM	SIDE WINDOW GLASS		1		1		
32	63104-90016-02Y	YAN CAM	SIDE WINDOW GLASS		1		1		
33	63104-90110-03Y	YAN CAM	SIDE WINDOW GLASS		4		1		
34	63104-96000-04Y	YAN CAM	SIDE WINDOW GLASS		1		1		
40	63104-90016-03Y	YAN CAM	SIDE WINDOW GLASS		2		1		
41	63104-90016-30Y	SÜRGÜLÜ CAM KOMPLE	SLIDE WINDOWS ASSY		1		1		
42	63104-90016-27Y	SÜRGÜLÜ CAM KOMPLE	SLIDE WINDOWS ASSY		1		1		
43	63104-96100-23Y	YAN CAM	SIDE WINDOW GLASS		2		1		
44	63104-96100-24Y	SÜRGÜLÜ CAM KOMPLE	SLIDE WINDOWS ASSY		1		1		
45	63104-96100-25Y	SÜRGÜLÜ CAM KOMPLE	SLIDE WINDOWS ASSY		1		1		
46	63104-90016-25Y	SÜRGÜLÜ CAM KOMPLE	SLIDE WINDOWS ASSY		1		1		
47	63104-90016-26Y	SÜRGÜLÜ CAM KOMPLE	SLIDE WINDOWS ASSY		1		1		
50	63104-96300-01	YAN CAM - SOL	SIDE WINDOW GLASS LH		1		1		
51	63104-96300-03	YAN CAM	SIDE WINDOW GLASS		6		1		
52	63104-96300-02	YAN CAM - SAĞ	SIDE WINDOW GLASS RH		1		1		
53	63104-96300-06	YAN CAM - SAĞ	SIDE WINDOW GLASS RH		1		1		
54	63104-96300-05	YAN CAM - SOL	SIDE WINDOW GLASS LH		1		1		
55	63104-96300-23	YAN CAM	SIDE WINDOW GLASS		2		1		
56	63104-96300-04	YAN CAM - SOL	SIDE WINDOW GLASS LH		1		1		
57	63104-96300-07	YAN CAM	SIDE WINDOW GLASS		1		1		

TEMSA	Yan camlar Side window glass	63104-96000-70/75/ -96100-70/72/-96300-70 Vehicle Model: **TB162W** **TB163W**	**27-020** RevDate: Page: 2

Pos	Part Number	Turkish	English	German	Qty	R/P	From	Up To	Original Number Supplier
58	63104-96016-31	YAN CAM - SOL	SIDE WINDOW GLASS LH		1		1		
59	63104-96016-32	SÜRGÜLÜ CAM KOMPLE	SLIDE WINDOWS ASSY		1		1		

TEMSA	Yan camlar Side window glass	Group No : 27-021 Draw. Num. : x Rev. Date : Page : 1
	Vehicle Model: TB162Z, TB163Z	

BIYC031

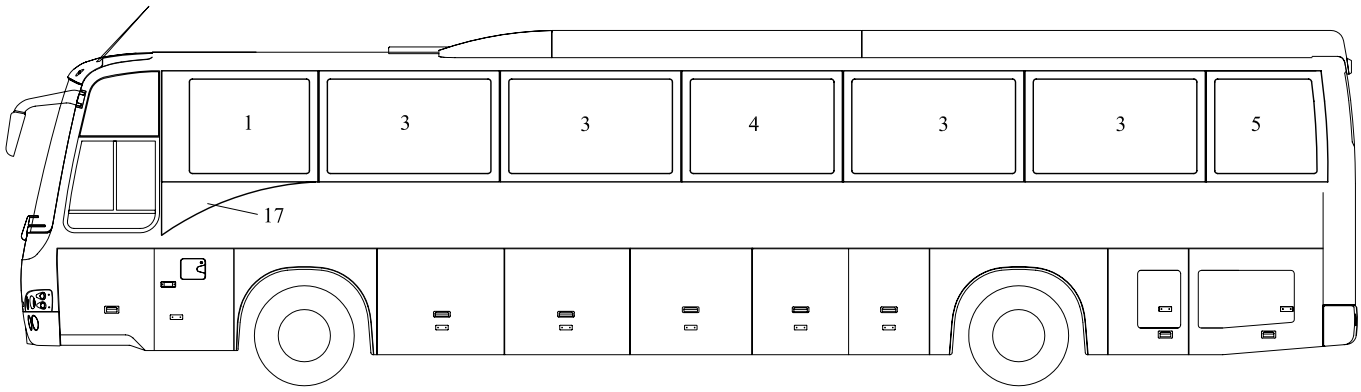

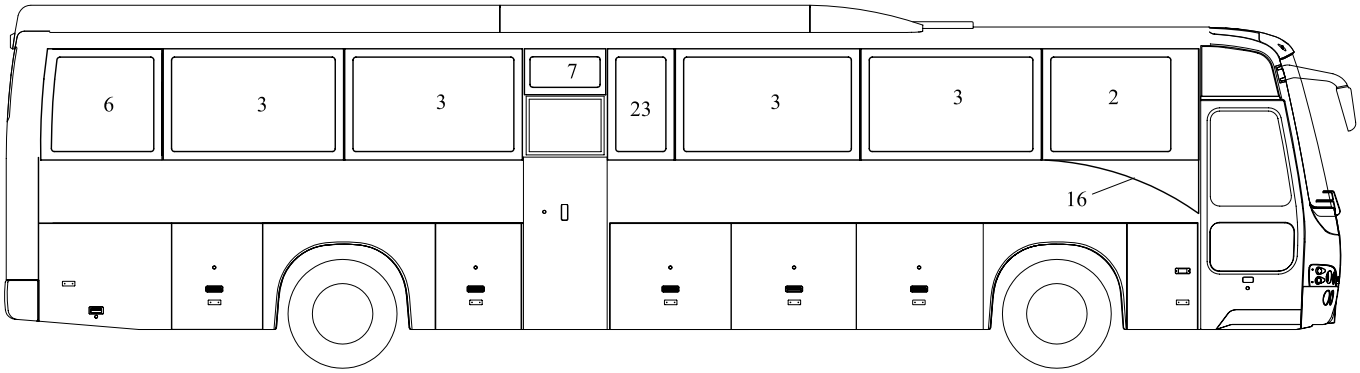

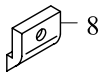

BIYC032

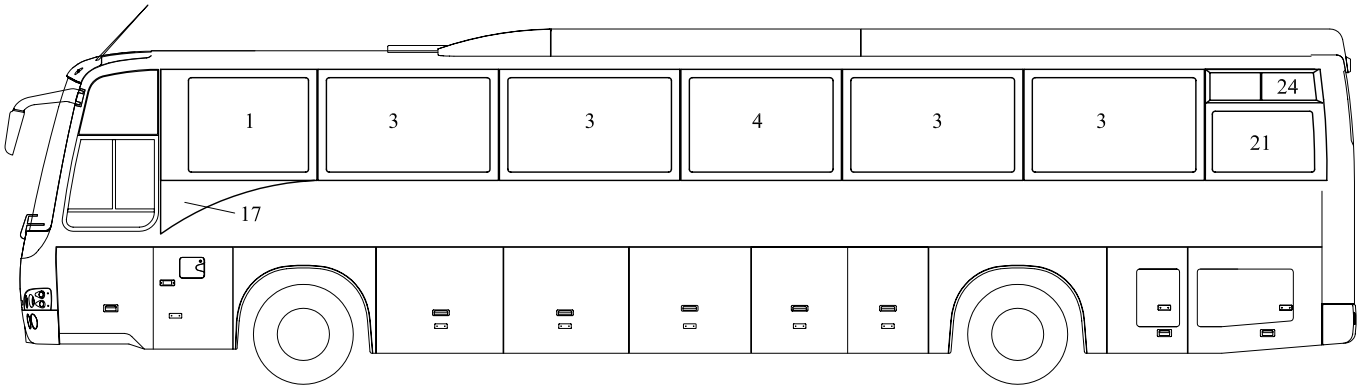

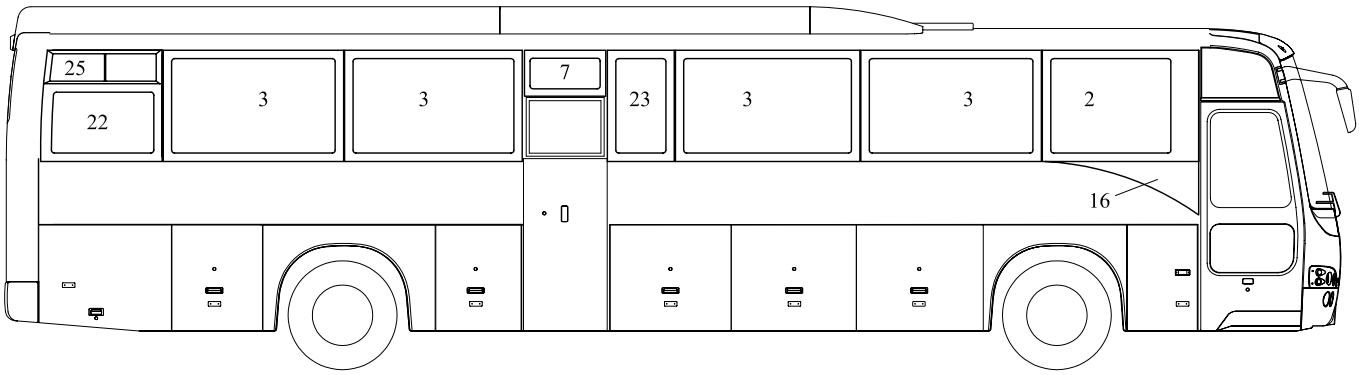

TEMSA	Yan camlar Side window glass	Group No : 27-021 Draw. Num. : x Rev. Date : Page : 2
	Vehicle Model: TB162Z, TB163Z	

BYCS032

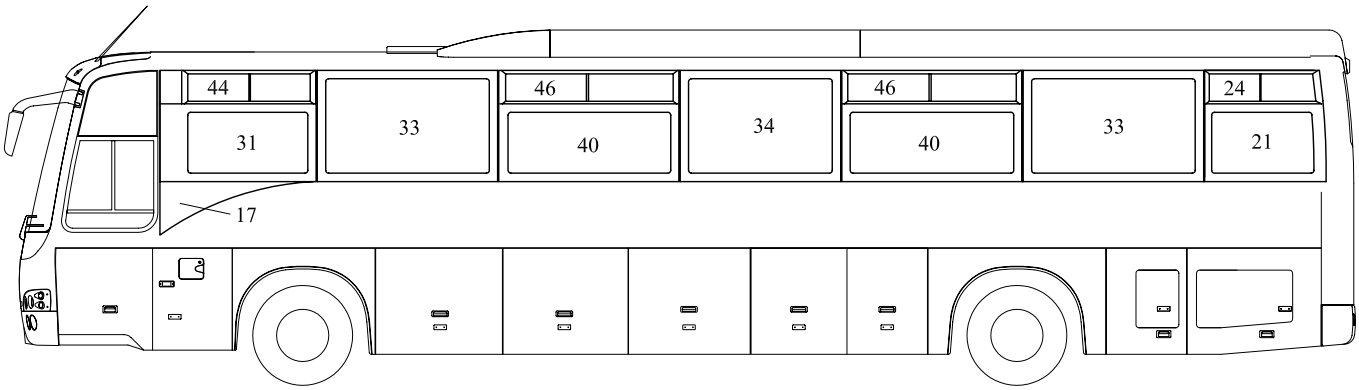

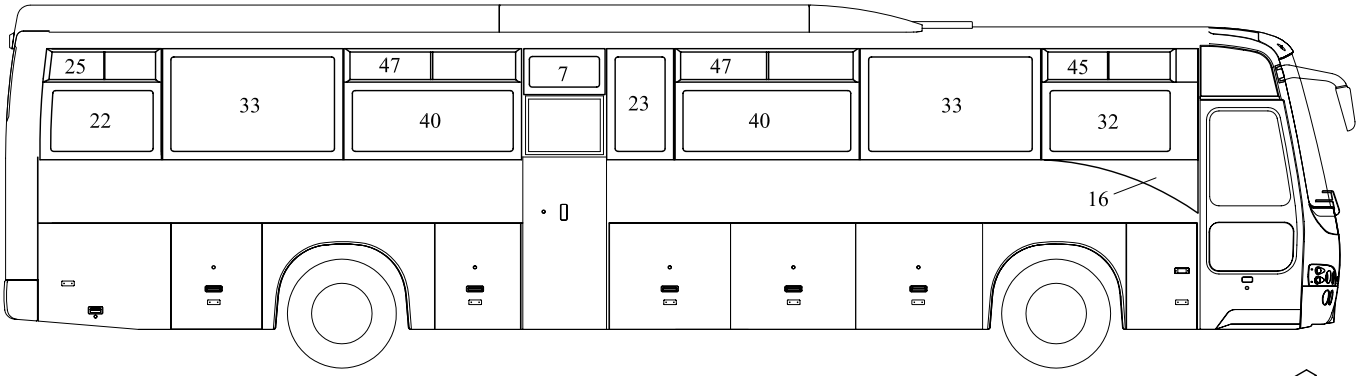

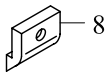

BYCS035

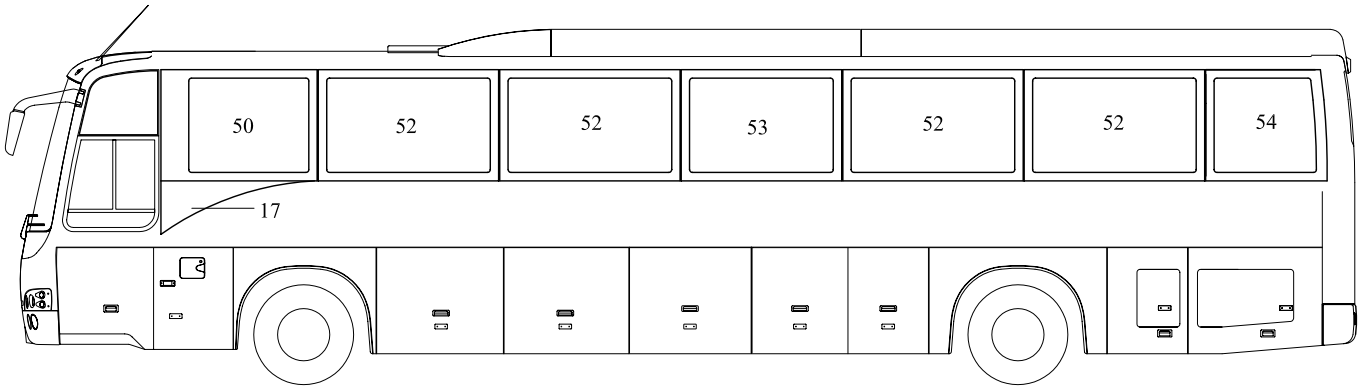

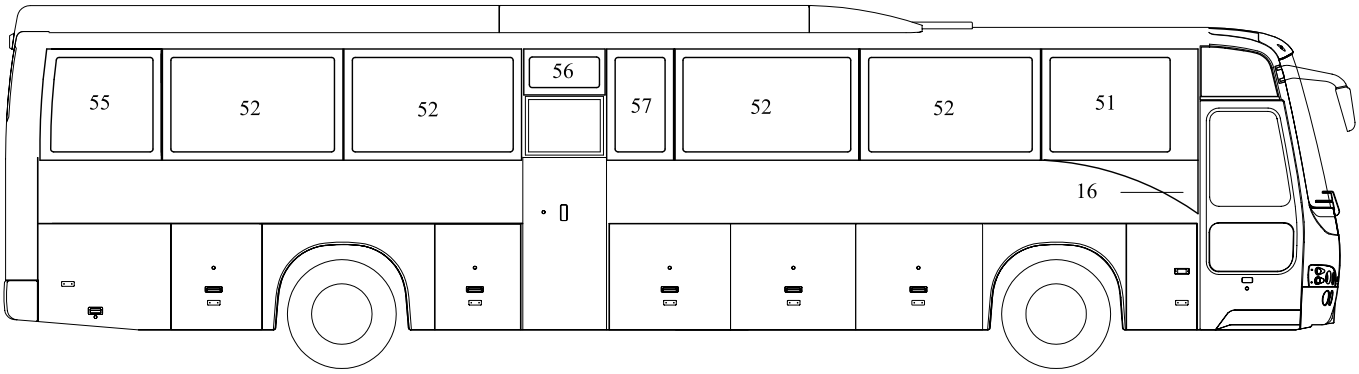

BYCS031

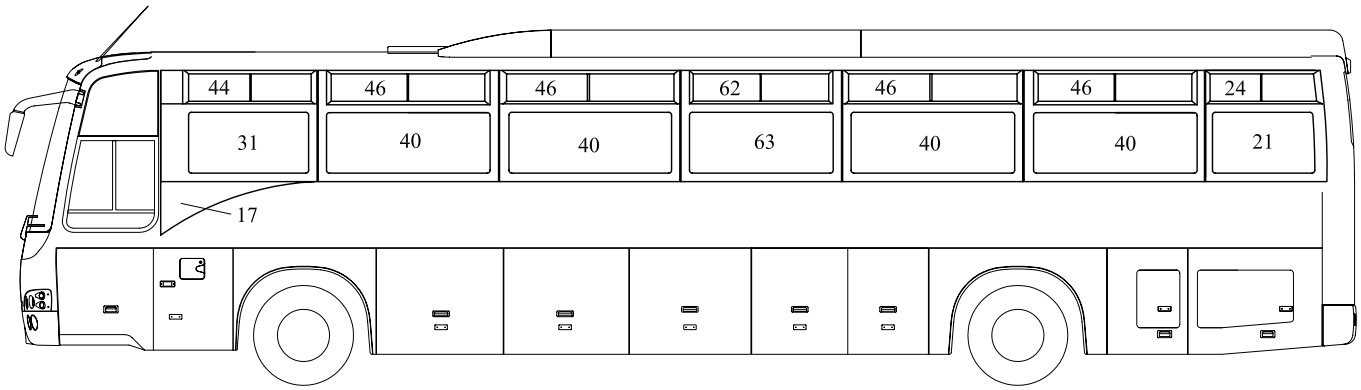
44
46
46
62
46
46
24
31
40
40
63
40
40
21
17

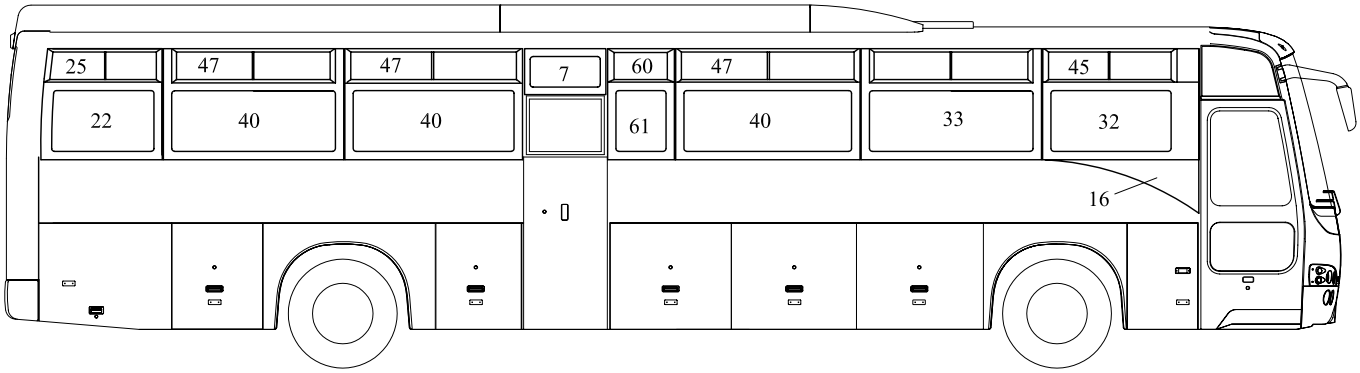
25
47
47
7
60
47
45
22
40
40
61
40
33
32
16

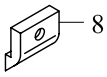
8

TEMSA	Yan camlar Side window glass	Drw.no: 63104-97000-70 / 75 / 63104-97100-70 / 63104-97300-70 / 63304-97100-70 Vehicle Model: **TB162Z** **TB163Z**	**27-021** RevDate: Page: 1

Pos	Part Number	Turkish	English	German	Qty	R/P	From	Up To	Original Number Supplier
1	63104-90120-01Y	YAN CAM	SIDE WINDOW GLASS		1		1		
2	63104-90120-02Y	YAN CAM	SIDE WINDOW GLASS		1		1		
3	63104-90110-03Y	YAN CAM	SIDE WINDOW GLASS		8		1		
4	63104-97000-04Y	YAN CAM	SIDE WINDOW GLASS		1		1		
5	63104-96000-05Y	YAN CAM	SIDE WINDOW GLASS		1		1		
6	63104-96000-06Y	YAN CAM	SIDE WINDOW GLASS		1		1		
7	63104-96000-07Y	YAN CAM	SIDE WINDOW GLASS		1		1		
8	63104-90020-09AY	TAKOZ	SPACER		AR		1		
16	63104-90120-16Y	YAN CAM	SIDE WINDOW GLASS		1		1		
17	63104-90120-17Y	YAN CAM	SIDE WINDOW GLASS		1		1		
21	63104-97100-21Y	YAN CAM	SIDE WINDOW GLASS		1		1		
22	63104-97100-22Y	YAN CAM	SIDE WINDOW GLASS		1		1		
23	63104-97000-23Y	YAN CAM	SIDE WINDOW GLASS		2		1		
24	63104-97100-28Y	SÜRGÜLÜ CAM KOMPLE	SLIDE WINDOWS ASSY		1		1		
25	63104-97100-29Y	SÜRGÜLÜ CAM KOMPLE	SLIDE WINDOWS ASSY		1		1		
31	63104-90016-01Y	YAN CAM	SIDE WINDOW GLASS		1		1		
32	63104-90016-02Y	YAN CAM	SIDE WINDOW GLASS		1		1		
33	63104-90110-03Y	YAN CAM	SIDE WINDOW GLASS		4		1		
34	63104-96000-04Y	YAN CAM	SIDE WINDOW GLASS		1		1		
40	63104-90016-03Y	YAN CAM	SIDE WINDOW GLASS		4		1		
44	63104-90016-25Y	SÜRGÜLÜ CAM KOMPLE	SLIDE WINDOWS ASSY		1		1		
45	63104-90016-26Y	SÜRGÜLÜ CAM KOMPLE	SLIDE WINDOWS ASSY		1		1		
46	63104-90016-30Y	SÜRGÜLÜ CAM KOMPLE	SLIDE WINDOWS ASSY		2		1		
47	63104-90016-27Y	SÜRGÜLÜ CAM KOMPLE	SLIDE WINDOWS ASSY		2		1		
50	63104-96300-01Y	YAN CAM SOL	SIDE WINDOW GLASS		1		1		
51	63104-96300-02Y	YAN CAM SAĞ	SIDE WINDOW GLASS		1		1		
52	63104-96300-03Y	YAN CAM	SIDE WINDOW GLASS		8		1		
53	63104-97300-04Y	YAN CAM SOL	SIDE WINDOW GLASS		1		1		
54	63104-96300-05Y	YAN CAM SOL	SIDE WINDOW GLASS		1		1		
55	63104-96300-06Y	YAN CAM SAĞ	SIDE WINDOW GLASS		1		1		
56	63104-96300-07Y	YAN CAM	SIDE WINDOW GLASS		1		1		
57	63104-97300-23Y	YAN CAM	SIDE WINDOW GLASS		2		1		
60	63104-97100-31Y	SÜRGÜLÜ CAM KOMPLE	SLIDE WINDOWS ASSY		1		1		
61	63104-97100-32Y	YAN CAM	SIDE WINDOW GLASS		1		1		
62	63104-97100-33Y	SÜRGÜLÜ CAM KOMPLE	SIDE WINDOW GLASS		1		1		

TEMSA	Yan camlar Side window glass	Drw.no: 63104-97000-70 / 75 / 63104-97100-70 / 63104-97300-70 / 63304-97100-70 Vehicle Model: **TB162Z** **TB163Z**	**27-021** RevDate: Page: 2

Pos	Part Number	Turkish	English	German	Qty	R/P	From	Up To	Original Number Supplier
63	63104-97100-34Y	YAN CAM SOL	SLIDE WINDOWS ASSY		1		1		

TEMSA	Yan cam Side window glass	Group No : 27-022 Draw. Num. : x Rev. Date : Page : 1
	Vehicle Model: TB162X, TB163X,	

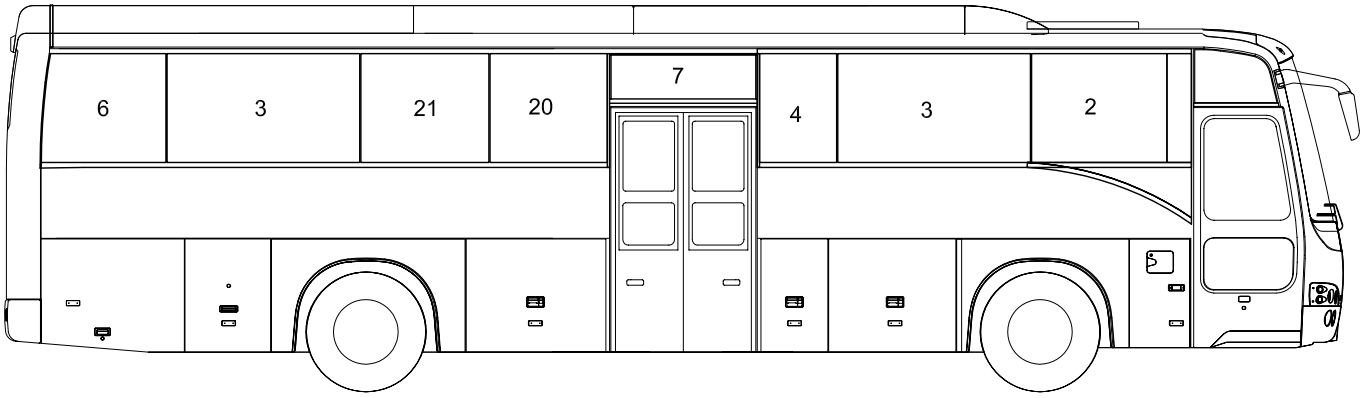

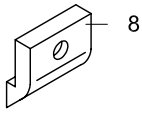

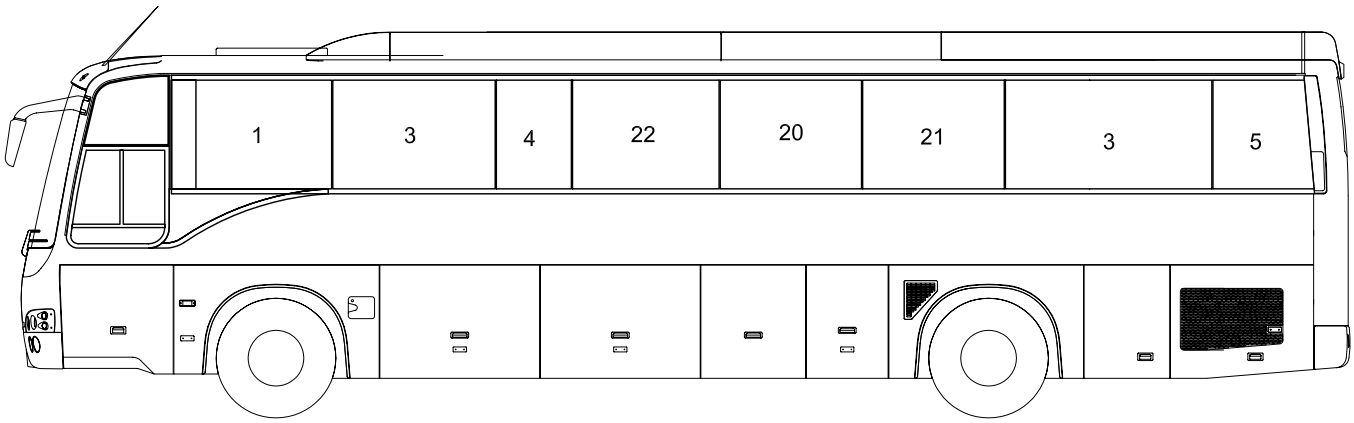

TEMSA	Yan camlar Side window glass	Drw.no: 63104-98000-70 Vehicle Model: **TB162X** **TB163X**	**27-022** RevDate: Page: 1

Pos	Part Number	Turkish	English	German	Qty	R/P	From	Up To	Original Number Supplier
1	63104-90120-01Y	YAN CAM SOL	SIDE WINDOW GLASS		1		1		
2	63104-90120-02Y	YAN CAM SAĞ	SIDE WINDOW GLASS		1		1		
3	63104-90110-03Y	YAN CAM	SIDE WINDOW GLASS		4		1		
4	63104-98000-04Y	YAN CAM	SIDE WINDOW GLASS		2		1		
5	63104-96000-05Y	YAN CAM	SIDE WINDOW GLASS		1		1		
6	63104-96000-06Y	YAN CAM	SIDE WINDOW GLASS		1		1		
7	63104-94120-07Y	YAN CAM	SIDE WINDOW GLASS		1		1		
8	63104-90020-09AY	TAKOZ	SPACER		47		1		
16	63104-90120-16Y	YAN CAM	SIDE WINDOW GLASS		1		1		
17	63104-90120-17Y	YAN CAM	SIDE WINDOW GLASS		1		1		
20	63104-99000-20Y	YAN CAM	SIDE WINDOW GLASS		2		1		
21	63104-99000-07Y	YAN CAM	SIDE WINDOW GLASS		2		1		
22	63104-94020-04Y	YAN CAM	SIDE WINDOW GLASS		1		1		

TEMSA	Yan cam Side window glass	Group No : 27-023 Draw. Num. : x Rev. Date : Page : 1
	Vehicle Model: TB162Y, TB163Y	

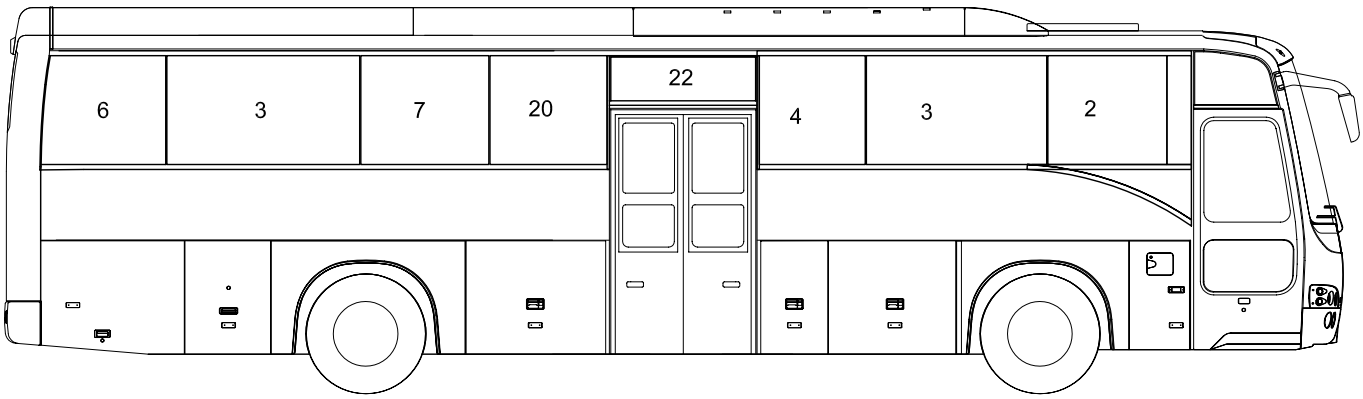

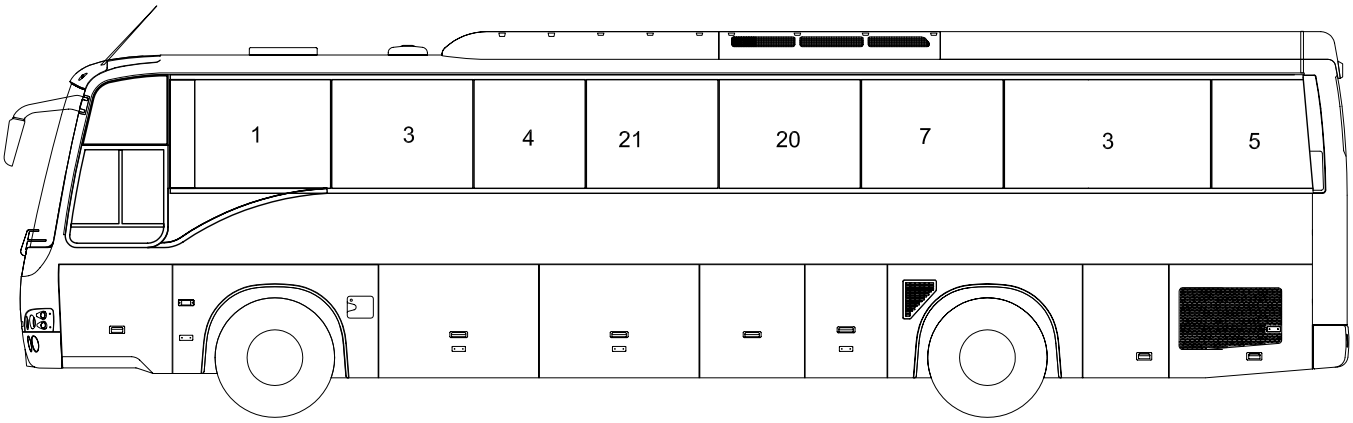

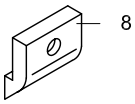

TEMSA	Yan camlar Side window glass	Drw.no: 63104-99000-70 Vehicle Model: **TB162Y** **TB163Y**	**27-023** RevDate: Page: 1

Pos	Part Number	Turkish	English	German	Qty	R/P	From	Up To	Original Number Supplier
1	63104-90120-01Y	YAN CAM SOL	SIDE WINDOW GLASS		1		1		
2	63104-90120-02Y	YAN CAM SAĞ	SIDE WINDOW GLASS		1		1		
3	63104-90110-03Y	YAN CAM	SIDE WINDOW GLASS		4		1		
4	63104-99000-04Y	YAN CAM SOL	SIDE WINDOW GLASS		2		1		
5	63104-96000-05Y	YAN CAM SOL	SIDE WINDOW GLASS		1		1		
6	63104-96000-06Y	YAN CAM SAĞ	SIDE WINDOW GLASS		1		1		
7	63104-99000-07Y	YAN CAM	SIDE WINDOW GLASS		2		1		
8	63104-90020-09Y	TAKOZ	SPACER		47		1		
16	63104-90120-16Y	YAN CAM	SIDE WINDOW GLASS		1		1		
17	63104-90120-17Y	YAN CAM	SIDE WINDOW GLASS		1		1		
20	63104-99000-20Y	YAN CAM	SIDE WINDOW GLASS		2		1		
21	63104-94020-04Y	YAN CAM	SIDE WINDOW GLASS		1		1		
22	63104-94120-70Y	YAN CAM	SIDE WINDOW GLASS		1		1		

TEMSA	Sürücü camı Drivers Window Fahrerscheibe	Group No : 27-030 Draw. Num. : x Rev. Date : Page : 1
	Vehicle Model: TB162W, TB162Z, TB162X, TB162Y, TB163W, TB163Z, TB163X, TB163Y	

BISICAMLISURUCUCAMI_YOK

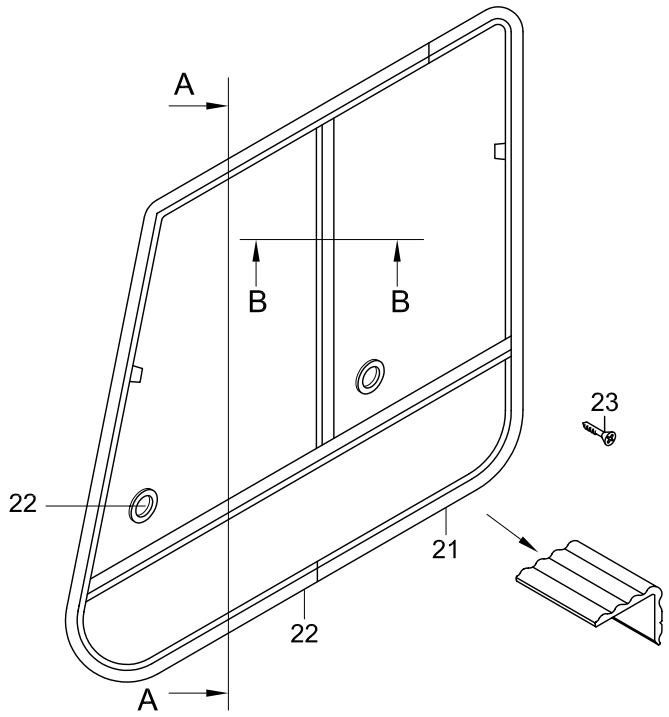

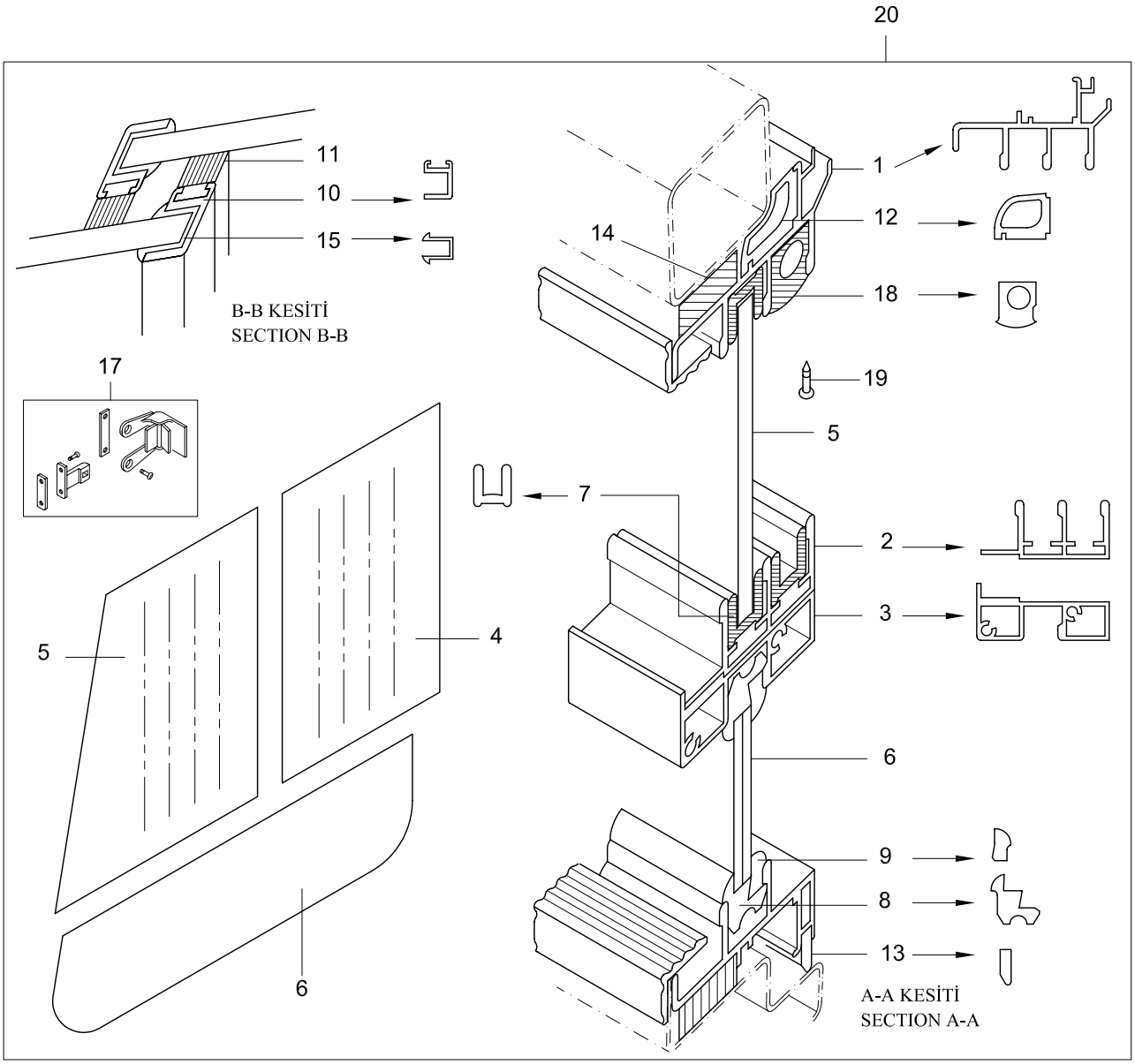

TEMSA	Sürücü camı Drivers Window Fahrerscheibe	Group No : 27-030 Draw. Num. : x Rev. Date : Page : 2
	Vehicle Model: TB162W, TB162Z, TB162X, TB162Y, TB163W, TB163Z, TB163X, TB163Y	

BISICAMLISURUCUCAMI_VAR

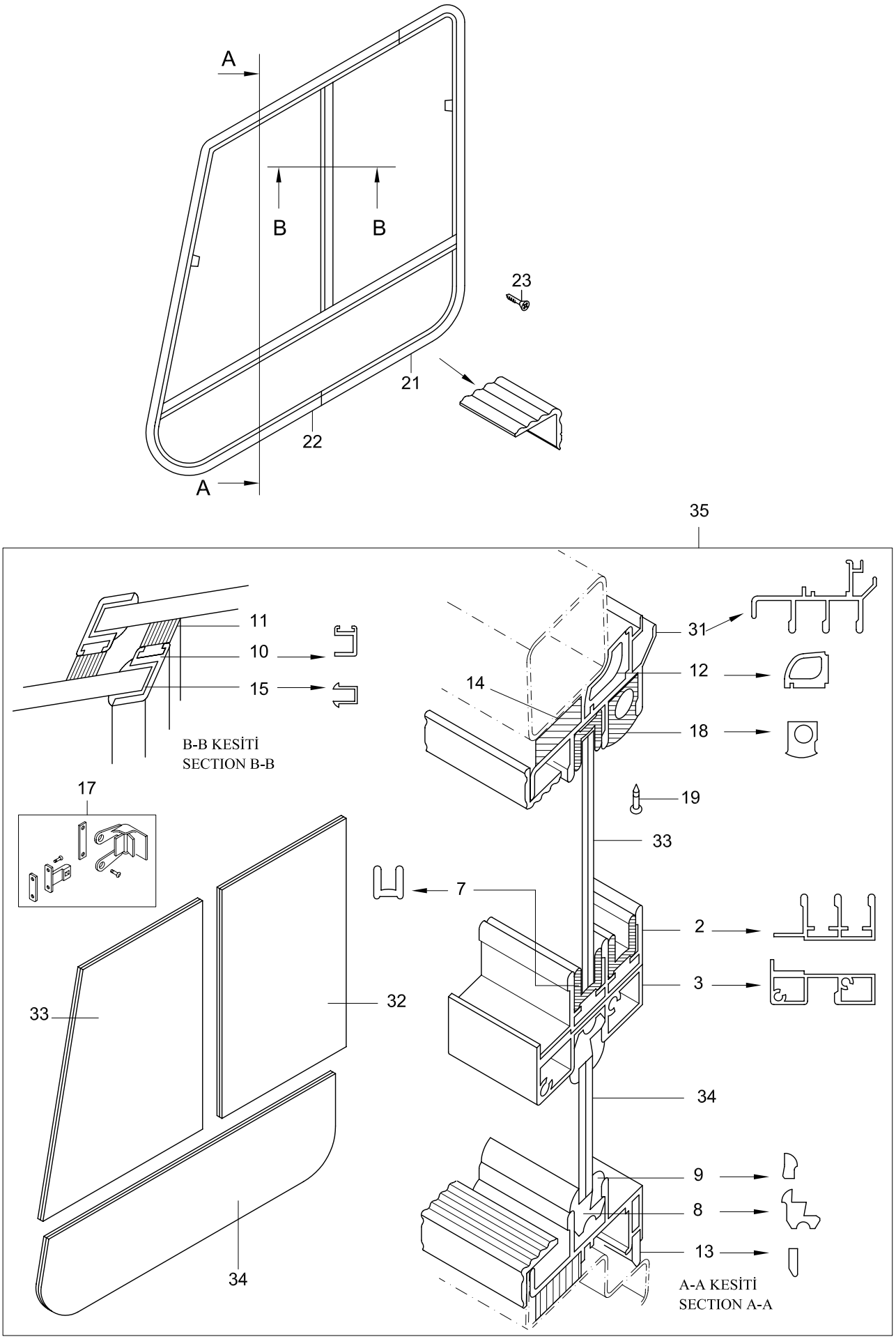

TEMSA	Sürücü camı Drivers window Fahrerscheibe	Drw.no: Vehicle Model: TB162W, TB162Z, TB162X, TB162Y TB163W, TB163Z, TB163X, TB163Y	27-030 RevDate: Page: 1

Pos	Part Number	Turkish	English	German	Qty	R/P	From	Up To	Original Number Supplier
1	TC299383-372X	ÇERÇEVE	FRAME		1		1		
2	TC299383-210X	ÜST ARA PROFİL	PROFILE UPPER		1		1		
3	TC299383-211YX	ALT ARA PROFİL	PROFILE LOWER		1		1		
4	TC299383-220X	REZİSTANSLI CAM	CAM- RESISTANCE		1		1		
5	TC299383-221X	REZİSTANSLI CAM	CAM- RESISTANCE		1		1		
6	TC299383-214X	CAM	GLASS		1		1		
7	TC299383-218X	FİTİL	WEATHER STRIP		1		1		L:4300mm
8	TC259317-06X	FİTİL	WEATHER STRIP		1		1		L:2020mm
9	MC259317-07X	FİTİL	WEATHER STRIP		1		1		L:2020mm
10	TC299383-114X	ARA ÇERÇEVE	FRAME CENTER		2		1		
11	TC299383-109X	FİTİL	WEATHER STRIP		1		1		
12	MC271380-00X	DIŞ FİTİL	MOULDING - OUTER		1		1		
13	MC271115-00X	DIŞ FİTİL	MOULDING - OUTER		1		1		
14	MC324934-27X	DESTEK	SUPPORT		8		1		
15	TC299383-112X	FİTİL	WEATHER STRIP		2		1		
17	TC299383-111X	MANDAL	LOCK		2		1		
18	TC299383-216X	FİTİL	WEATHER STRIP		1		1		
19	TC299383-217X	VİDA	SCREW		AR		1		
20	TC299383-376Y	SÜRÜCÜ CAMI VE ÇERÇEVESİ	WINDOW ASSY DRIVERS		1		1	?	OLD
20	TC299383-377Y	SÜRÜCÜ CAMI VE ÇERÇEVESİ	WINDOW ASSY DRIVERS		1		?		BISICAMLISURUCUCAMI_YOK
21	TC299392-11Y	KENAR ÇITASI	PLATE EDGE		1		1		TC299392-03
22	TC299392-12Y	KENAR ÇITASI	PLATE EDGE		1		1		TC299392-03
23	MC395366Y	VİDA	SCREW TAPPING		8		1		4.2*25
24	TC299383-219Y	REZİSTANS KAPAĞI	RESISTANCE COVER		2		1		
31	TN240104X	ÇERÇEVE	FRAME		1		1		BISICAMLISURUCUCAMI_VAR
32	TN240102X	CAM	GLASS		1		1		BISICAMLISURUCUCAMI_VAR
33	TN240101X	CAM	GLASS		1		1		BISICAMLISURUCUCAMI_VAR
34	TN240103X	CAM	GLASS		1		1		BISICAMLISURUCUCAMI_VAR
35	TN240100Y	SÜRÜCÜ CAMI VE ÇERÇEVESİ	WINDOW ASSY DRIVERS		1		1		BISICAMLISURUCUCAMI_VAR

TEMSA	Panorama cam ve yağmur oluğu Window panorama & drip moulding Ausblicksscheibe und Regenrinne	Group No : 27-040 Draw. Num. : x Rev. Date : Page : 1
	Vehicle Model: TB162W, TB162Z, TB162X, TB162Y, TB163W, TB163Z, TB163X, TB163Y	

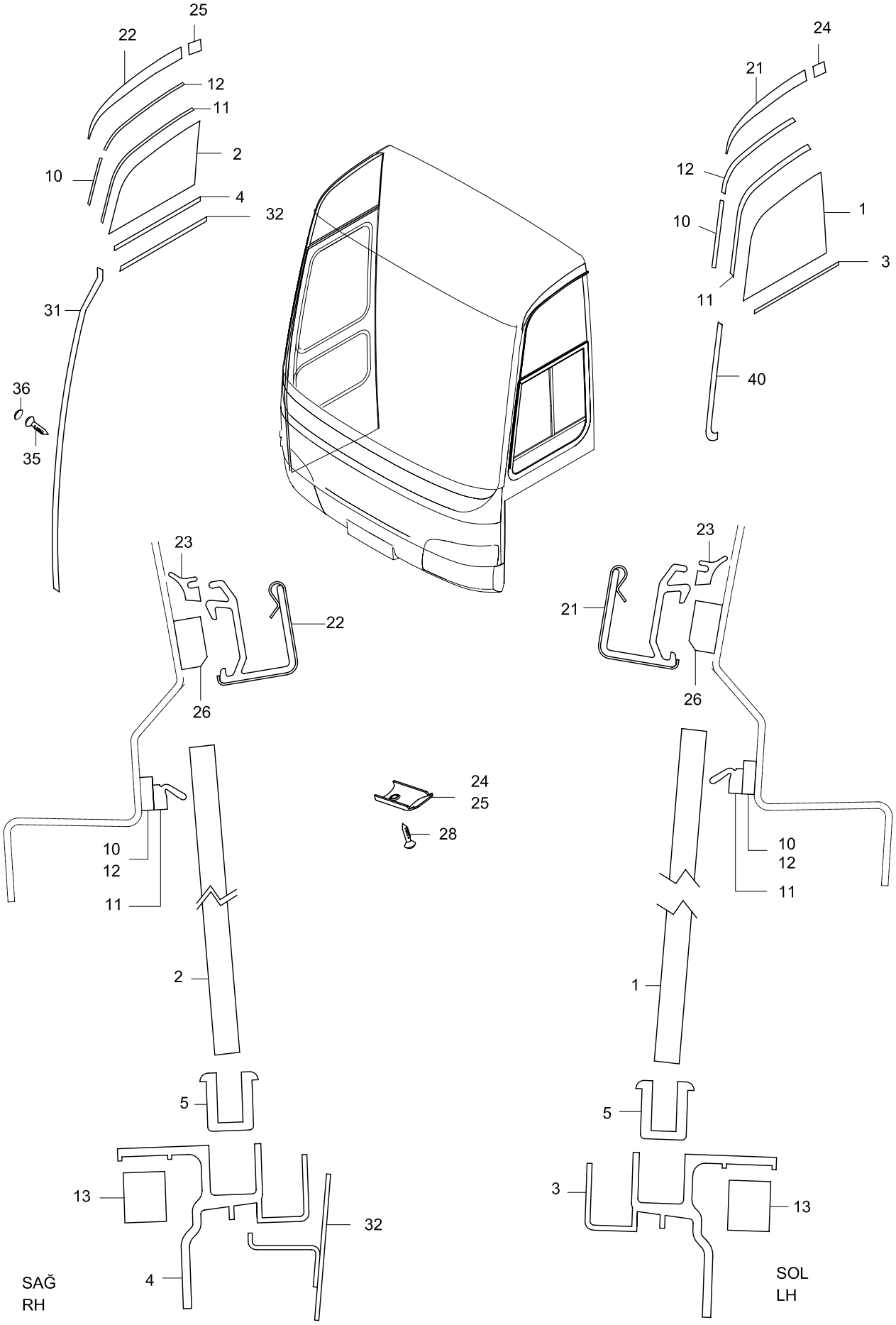

12 meter

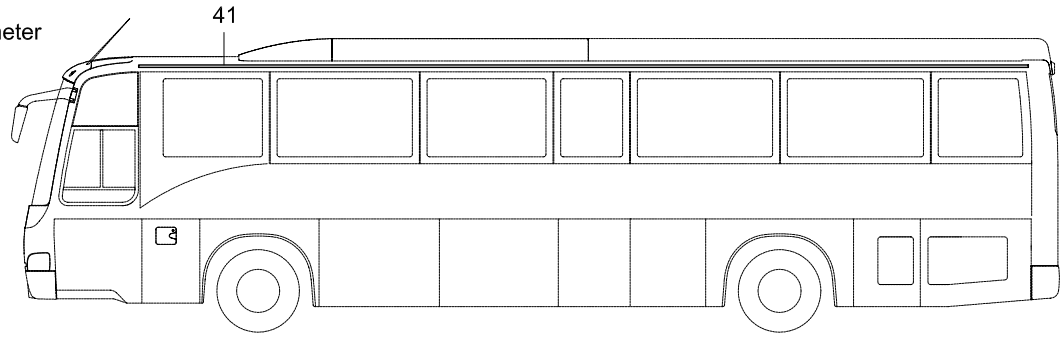

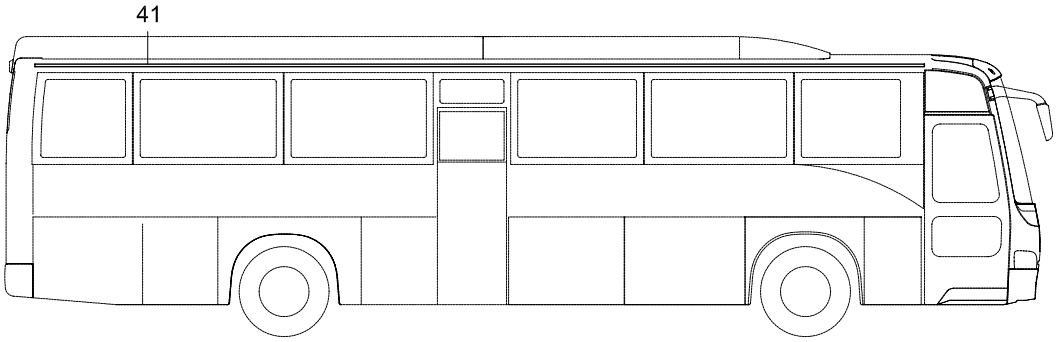

12. 8 meter

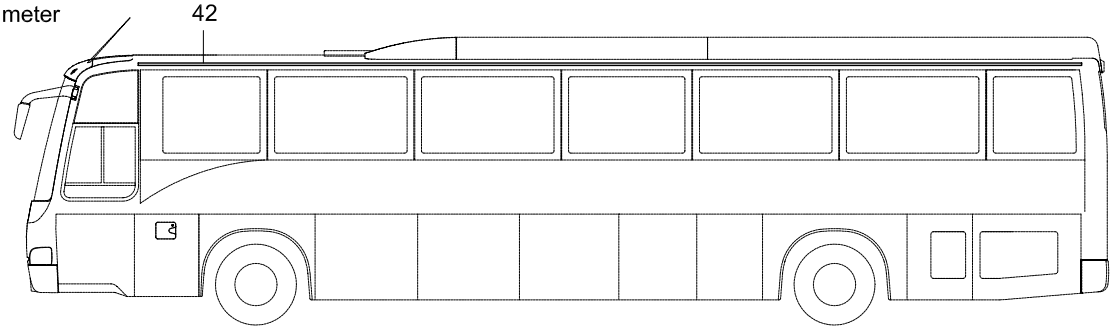

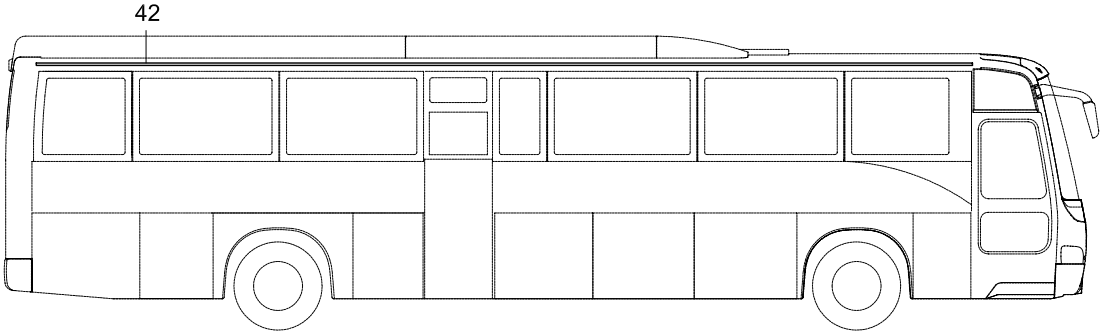

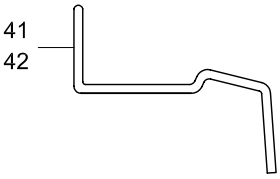

TEMSA	Panorama cam ve yağmur oluğu Window panorama & drip moulding Ausblicksscheibe und Regenrinne	TC299392-003/100/TC783763-000/62013-91090-70/1 Vehicle Model: **TB162W, TB162Z, TB162X, TB162Y** **TB163W, TB163Z, TB163X, TB163Y**	**27-040** RevDate: Page: 1

Pos	Part Number	Turkish	English	German	Qty	R/P	From	Up To	Original Number Supplier
1	TC783763-001Y	PANORAMA CAM SOL	WINDOWS PANORAMA LH		1		1		
2	TC783763-002Y	PANORAMA CAM SAG	WINDOW PANORAMA RH		1		1		
3	TC783763-003Y	ÇERÇEVE SOL	FRAME LH		1		1		
4	TC783763-004Y	ÇERÇEVE SAG	FRAME RH		1		1		
5	63108-10730-10Y	FİTİL	WEATHER STRIP		AR		1		L:810mm, L:720mm
10	TM246135Y	FİTİL	W. STRIP		1		1		L:1090mm
11	TC375959DY	FİTİL	DAM WINDOW		1		1		L:3050mm
12	TM246141Y	FİTİL	W . STRIP		1		1		L:1960mm
13	TC283762-09Y	TAKOZ	SPACER		6		1		
21	62013-91090-01Y	YAĞMUR OLUĞU	DRIP MOULDING LH		1		1		
22	62013-91190-02Y	YAĞMUR OLUĞU SAĞ	DRIP MOULDING RH		1		1		
23	MC323621-03Y	FİTİL	WEATHER STRIP		AR		1		L:770mm
24	62013-41100-01Y	KAPAK	COVER DRIP MOULDING		1		1		
25	62013-41100-02Y	KAPAK	COVER DRIP MOULDING		1		1		
26	MC268758Y	ARA PARÇA	SPACER		2		1		
28	MF453093Y	VİDA	SCREW		AR		1		
31	TC255345Y	YAĞMUR OLUĞU - SAĞ	DRIP MOULDING - RH		1		1		
32	TC272913Y	YAĞMUR OLUĞU	MEMBER DRIP		1		1		
35	MC395296Y	VİDA	SCREW		AR		1		
36	MC272875Y	VİDA BAŞLIĞI	CAP SCREW		AR		1		
40	TC272861-010Y	YAĞMUR OLU-SÜRÜCÜ PENCERE	DRIP MOULDING-DRIVERS WNDW		1		1	?	DELETE
41	62041-96400-11Y	YAĞMUR OLUĞU	DRIP MOULDING		2		1	201204	L:5200mm 62041-96400-00 12 meter vehicle
41	62041-96400-21Y	YAĞMUR OLUĞU	DRIP MOULDING		2		201204		12 meter vehicle
42	62041-96400-10Y	YAĞMUR OLUĞU	DRIP MOULDING		2		1	201204	L:5600mm 62041-96400-00 12.8 meter vehicle
42	62041-96400-20Y	YAĞMUR OLUĞU	DRIP MOULDING		2		201204		12.8 meter vehicle

TEMSA	Çift cam dayama profilleri Double glazed glass frame Doppelt Glazierte Fensterrahmen	Group No : 27-050 Draw. Num. : x Rev. Date : Page : 1
	Vehicle Model: TB162W, TB163W,	

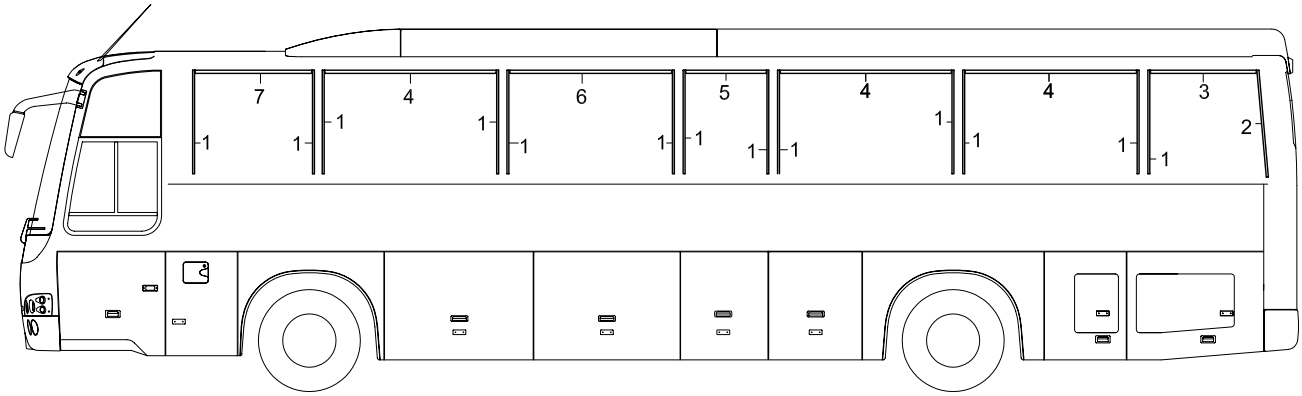

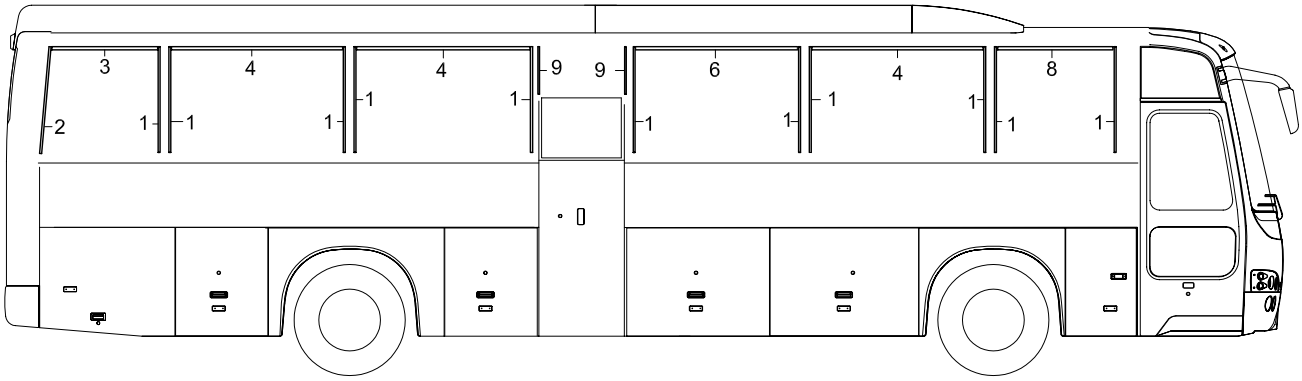

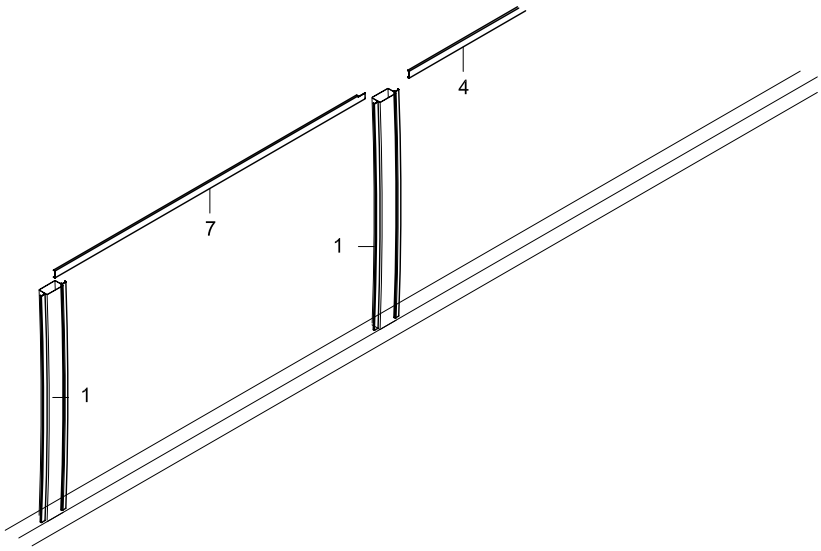

TEMSA	Çift cam dayama profilleri Double glazed glass frame Doppelt Glazierte Fensterrahmen	Group No : 27-050 Draw. Num. : x Rev. Date : Page : 2
	Vehicle Model: TB162W, TB163W,	

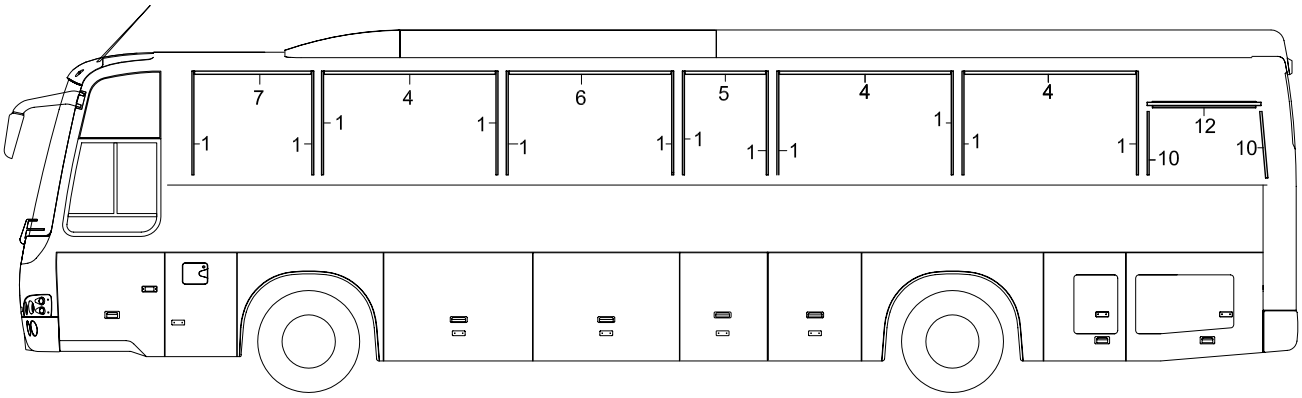

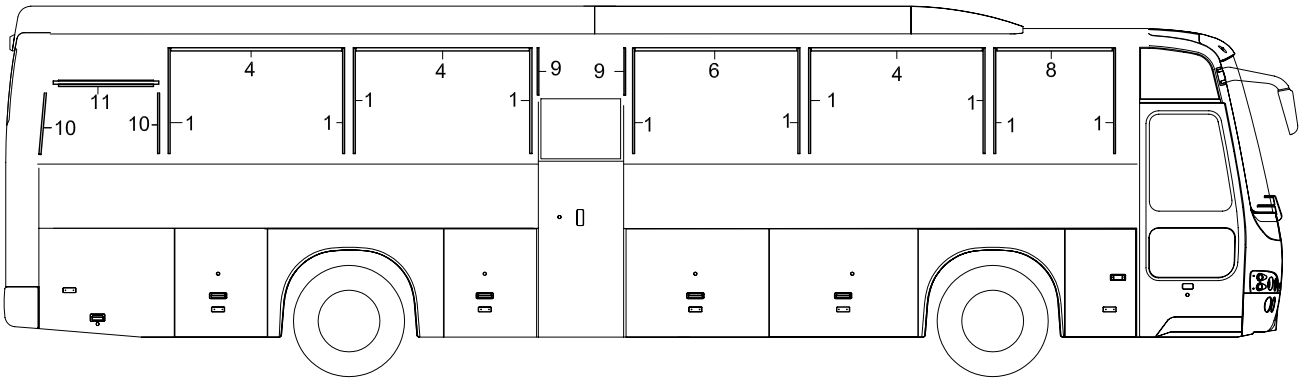

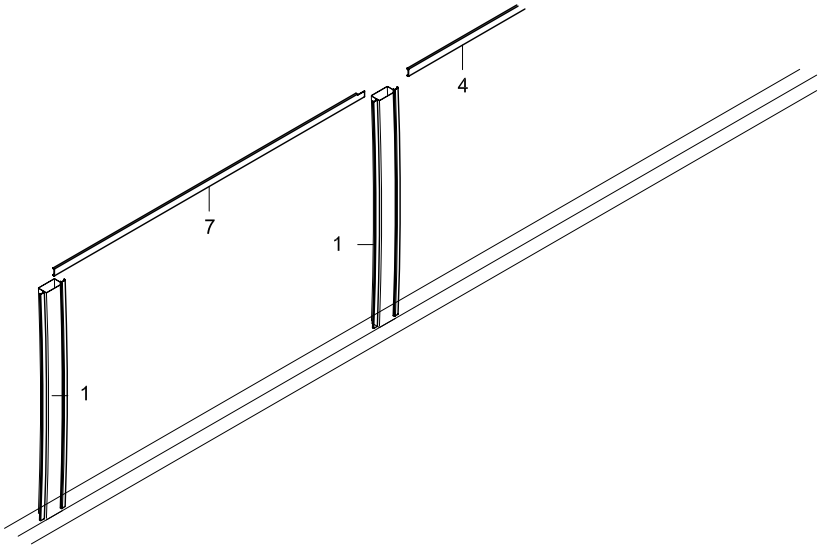

TEMSA	Çift cam dayama profilleri Double glazed glass frame Doppelt Glazierte Fensterrahmen	Group No : 27-050 Draw. Num. : x Rev. Date : Page : 3
	Vehicle Model: TB162W, TB163W,	

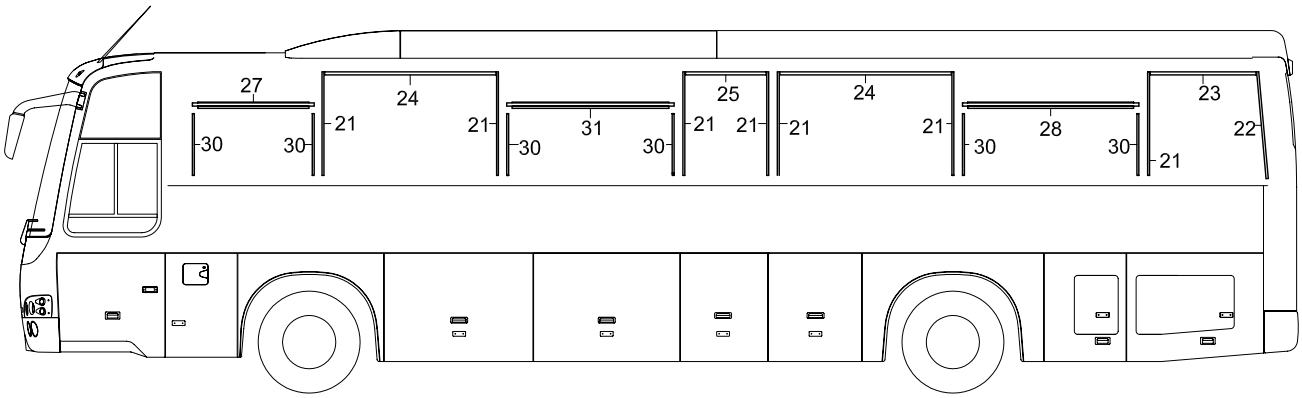

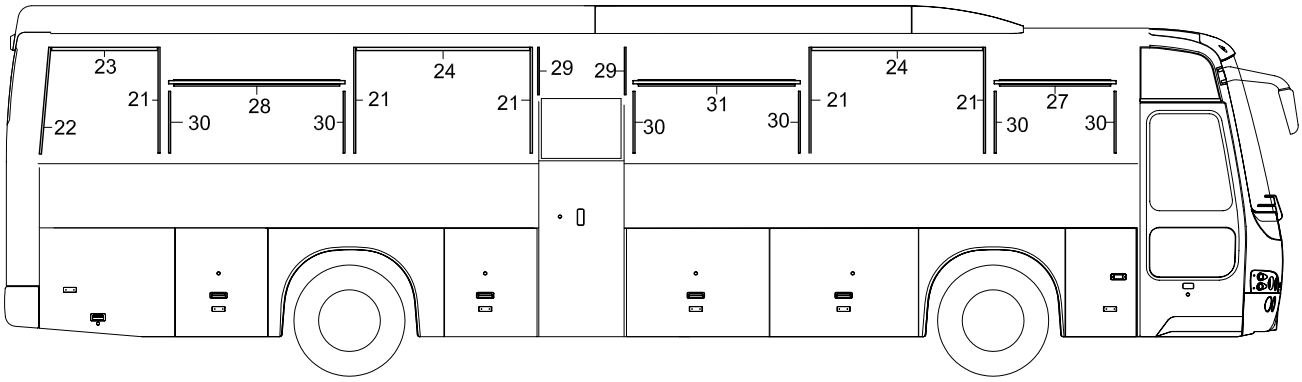

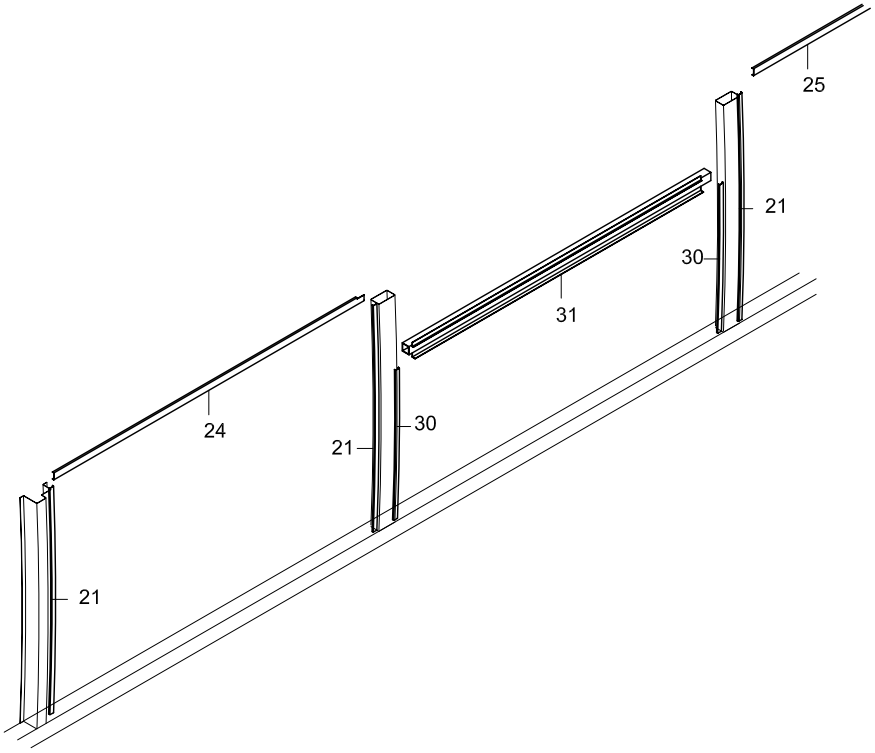

TEMSA	Çift cam dayama profilleri Double glazed glass frame Doppelt Glazierte Fensterrahmen	Drw.no: Vehicle Model: **TB162W** **TB163W**	**27-050** RevDate: Page: 1

Pos	Part Number	Turkish	English	German	Qty	R/P	From	Up To	Original Number Supplier
1	62006-80570-01AY	U-PLAKA	PLATE-U		24		1	150504	
2	62006-90570-02Y	U-PLAKA	PLATE-U		2		1	150504	
3	62006-96570-03Y	U-PLAKA	PLATE-U		2		1		
4	62006-80570-04Y	U-PLAKA	PLATE-U		6		1		
5	62006-96570-05Y	U-PLAKA	PLATE-U		1		1		
6	62006-96570-06Y	U-PLAKA	PLATE-U		2		1		
7	62006-90570-07Y	U-PLAKA	PLATE-U		1		1		
8	62006-90570-08Y	U-PLAKA	PLATE-U		1		1		
9	62006-96570-09Y	L-PLAKA	PLATE-L		2		1	150504	
10	62006-90670-02Y	U-PLAKA	PLATE-U		4		1		Option Code: BYCS032
11	62006-97570-11Y	U-PLAKA	PLATE-U		1		1		Option Code: BYCS032
12	62006-97570-03Y	U-PLAKA	PLATE-U		1		1		Option Code: BYCS032
21	62006-80570-01Y	U-PLAKA	PLATE-U		12		1		
22	62006-90570-02Y	U-PLAKA	PLATE-U		2		1		
23	62006-96570-03Y	U-PLAKA	PLATE-U		2		1		
24	62006-80570-04Y	U-PLAKA	PLATE-U		6		1		
25	62006-96570-05Y	U-PLAKA	PLATE-U		1		1		
26	62006-96570-06Y	U-PLAKA	PLATE-U		2		1		
27	62006-90018-06Y	U-PLAKA	PLATE-U		2		1		
28	62006-90018-04Y	U-PLAKA	PLATE-U		2		1		
29	62006-96570-09Y	L-PLAKA	PLATE-L		2		1		
30	62006-90670-02Y	U-PLAKA	PLATE-U		12		1		
31	62006-96570-11Y	U-PLAKA	PLATE-U		2		1		

TEMSA	Çift cam dayama profilleri Double glazed glass frame Doppelt Glazierte Fensterrahmen	Group No : 27-051 Draw. Num. : x Rev. Date : Page : 1
	Vehicle Model: TB162Z, TB163Z,	

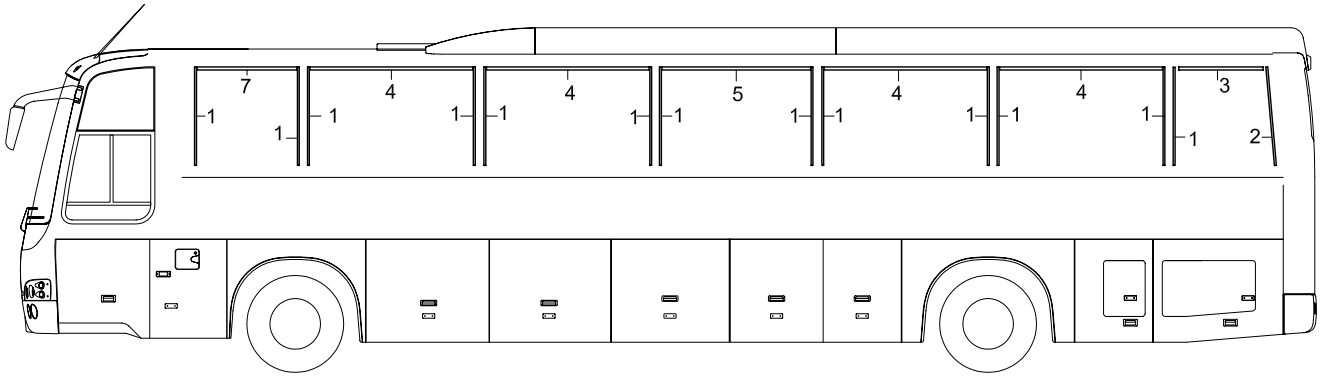

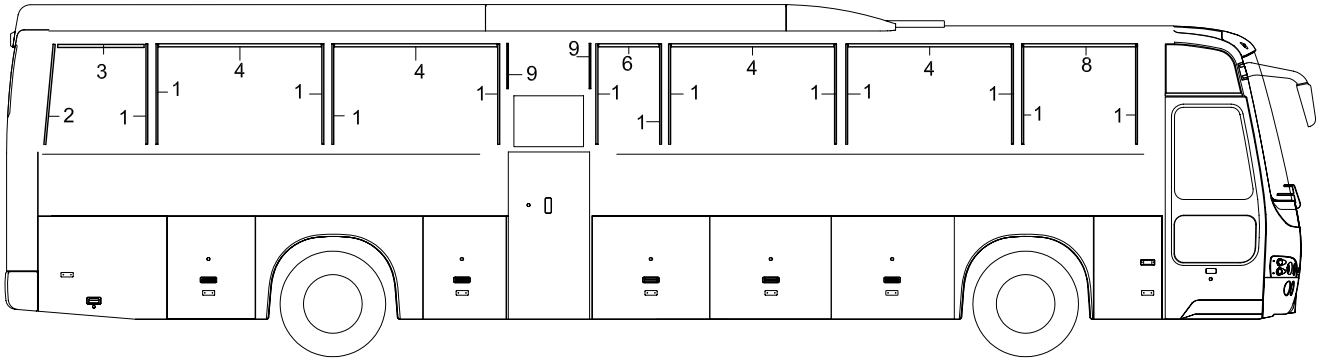

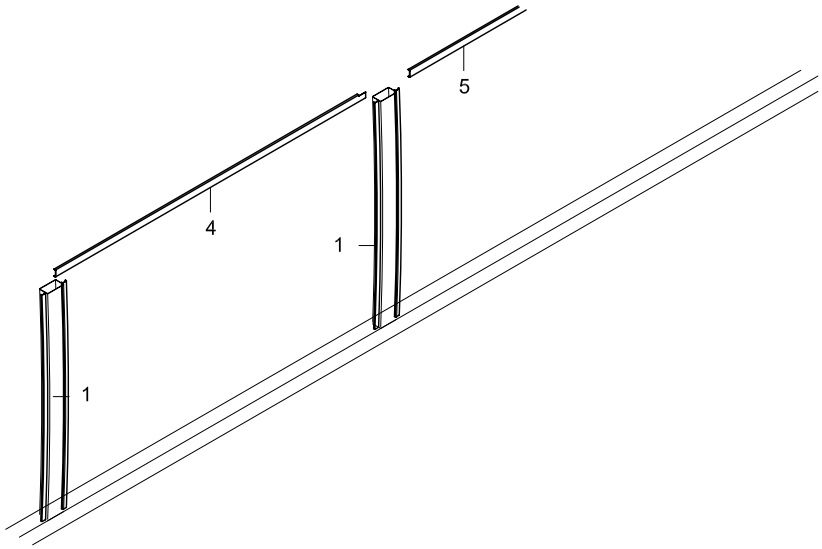

TEMSA	Çift cam dayama profilleri Double glazed glass frame Doppelt Glazierte Fensterrahmen	Group No : 27-051 Draw. Num. : x Rev. Date : Page : 2
	Vehicle Model: TB162Z, TB163Z,	

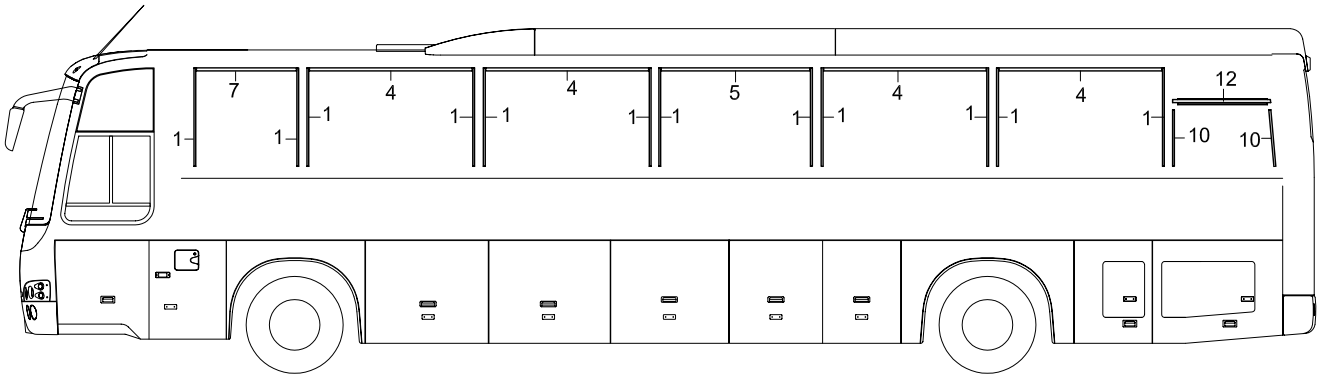

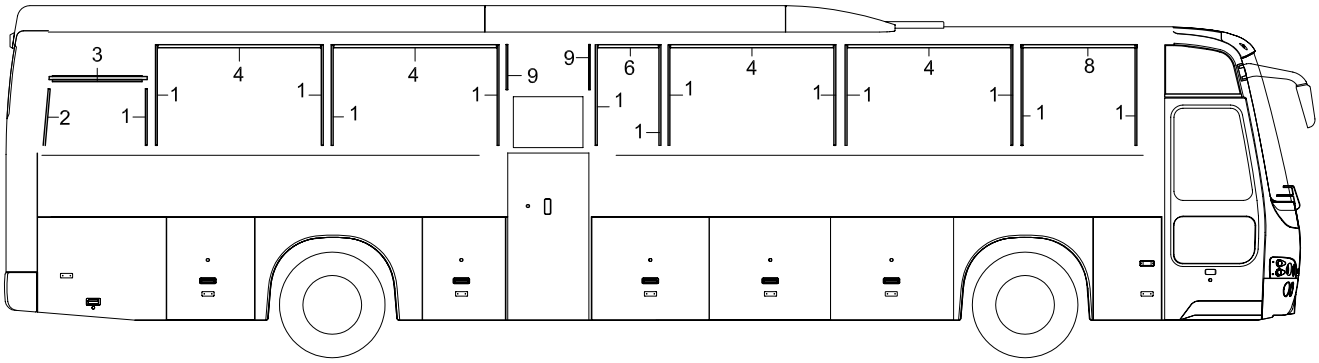

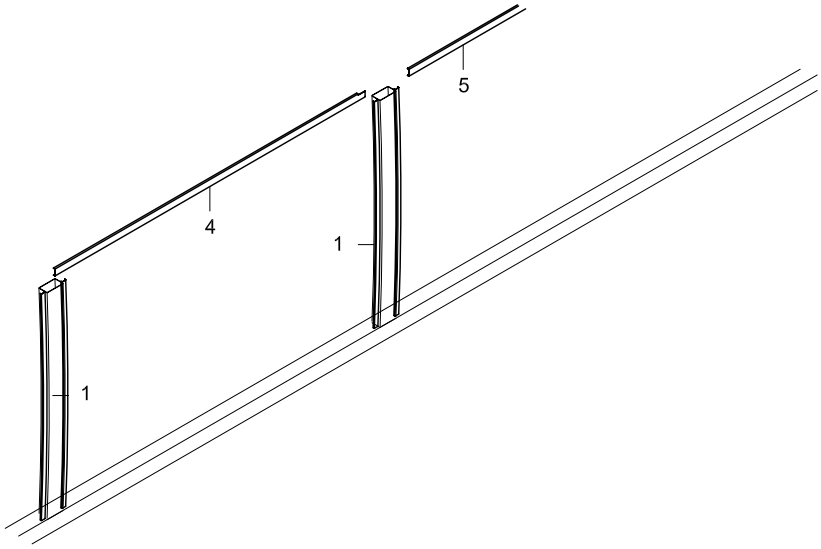

TEMSA	Çift cam dayama profilleri Double glazed glass frame Doppelt Glazierte Fensterrahmen	Group No : 27-051 Draw. Num. : x Rev. Date : Page : 3
	Vehicle Model: TB162Z, TB163Z,	

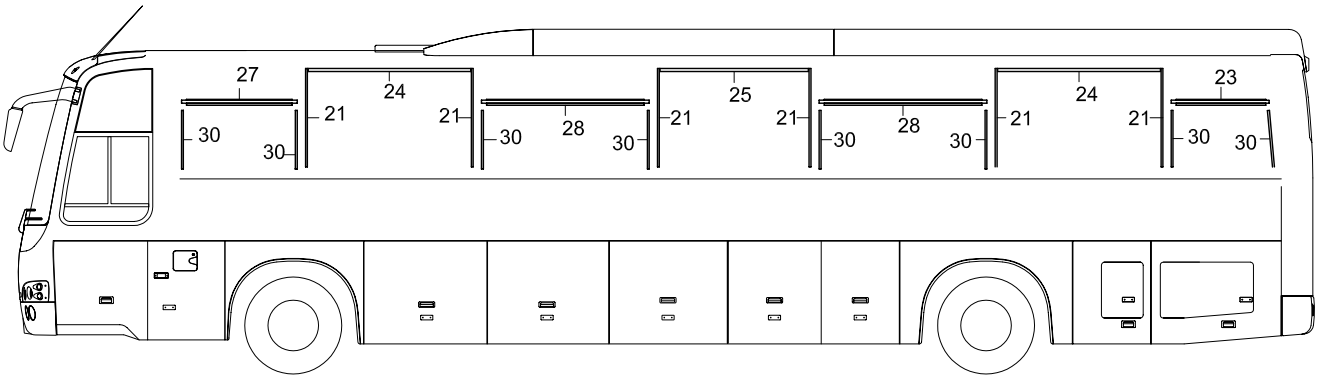

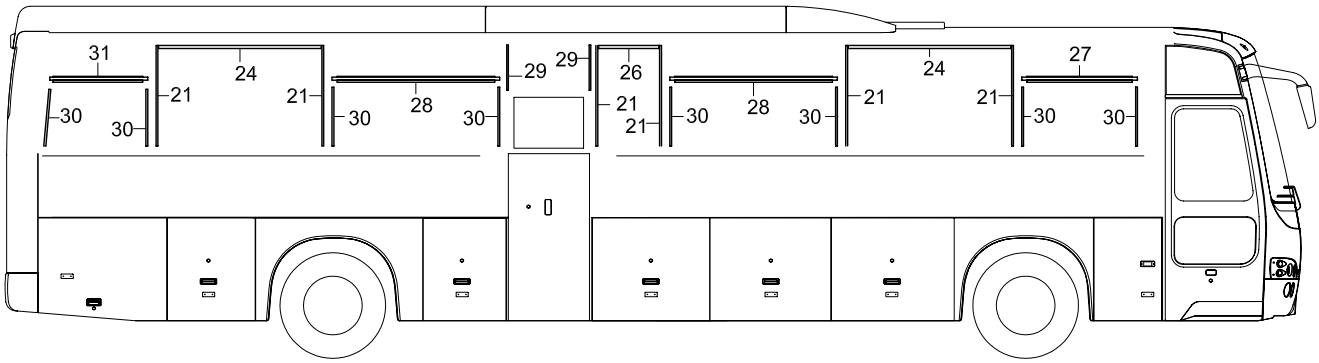

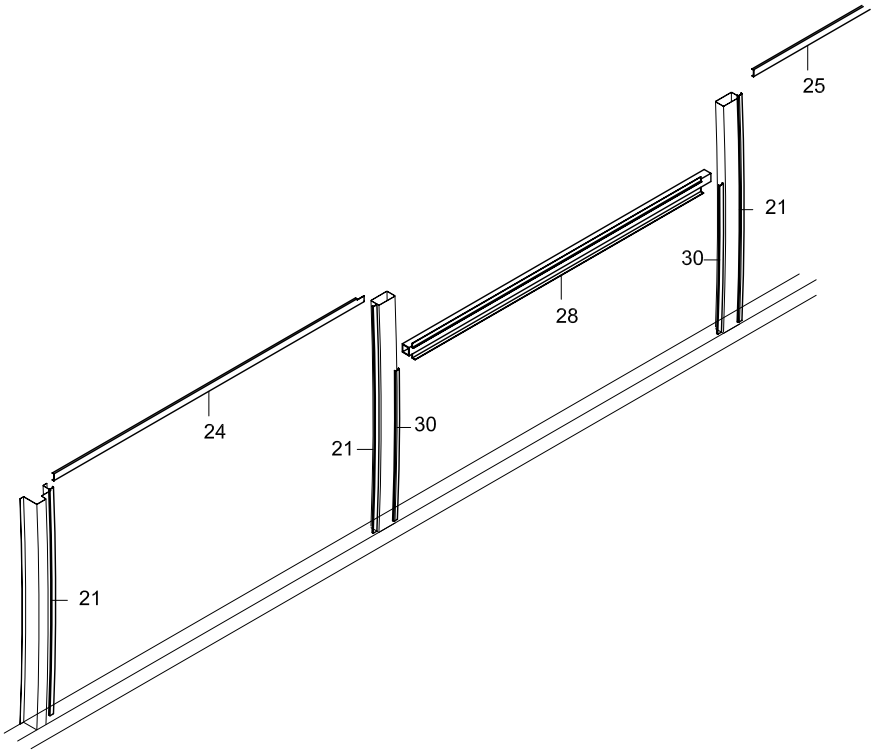

TEMSA	Çift cam dayama profilleri Double glazed glass frame Doppelt Glazierte Fensterrahmen	Drw.no: Vehicle Model: **TB162Z** **TB163Z**	**27-051** RevDate: Page: 1

Pos	Part Number	Turkish	English	German	Qty	R/P	From	Up To	Original Number Supplier
1	62006-80570-01Y	U-PLAKA	PLATE-U		26		1	150504	
2	62006-90570-02Y	U-PLAKA	PLATE-U		2		1	150504	
3	62006-96570-03Y	U-PLAKA	PLATE-U		2		1		
4	62006-80570-04Y	U-PLAKA	PLATE-U		8		1		
5	62006-97570-05Y	U-PLAKA	PLATE-U		1		1		
6	62006-97570-06Y	U-PLAKA	PLATE-U		2		1		
7	62006-90570-07Y	U-PLAKA	PLATE-U		1		1		
8	62006-90570-08Y	U-PLAKA	PLATE-U		1		1		
9	62006-96570-09Y	L-PLAKA	PLATE-L		2		1	150504	
10	62006-90670-02Y	U-PLAKA	PLATE-U		4		1		Option Code: BYCS032
11	62006-97570-11Y	U-PLAKA	PLATE-U		1		1		Option Code: BYCS032
12	62006-97570-03Y	U-PLAKA	PLATE-U		1		1		Option Code: BYCS032
21	62006-80570-01Y	U-PLAKA	PLATE-U		12		1		
23	62006-97570-03Y	U-PLAKA	PLATE-U		1		1		
24	62006-80570-04Y	U-PLAKA	PLATE-U		4		1		
25	62006-97570-05Y	U-PLAKA	PLATE-U		1		1		
26	62006-97570-06Y	U-PLAKA	PLATE-U		1		1		
27	62006-90018-06Y	U-PLAKA	PLATE-U		2		1		
28	62006-90018-04Y	U-PLAKA	PLATE-U		4		1		
29	62006-96570-09Y	L-PLAKA	PLATE-L		2		1		
30	62006-90670-02Y	U-PLAKA	PLATE-U		16		1		
31	62006-97570-11Y	U-PLAKA	PLATE-U		1		1		

28 KAPILAR, KAPAKLAR
DOORS & LIDS
x

28-010	Ön kapı Front Door x	TB162W TB163W	TB162Z TB163Z	TB162X TB163X	TB162Y TB163Y
28-020	Orta kapı - tek kanat Center door - single leaf x	TB162W TB163W	TB162Z TB163Z		
28-022	Orta kapı - tek kanat (İsrail) Center door - single leaf (Israel) x	TB162W			
28-025	Orta kapı - çift kanat Center Door - double leaf x			TB162X TB163X	TB162Y TB163Y
28-030	Yan kapak - standart kilit Side lid - standard lock x	TB162W TB163W			
28-030.1	Yan kapak - Happich kilit Side lid - Happich lock x	TB162W TB163W			
28-031	Yan kapak - standart kilit Side lid - standard lock x	TB162W TB163W			
28-031.1	Yan kapak - Happich kilit Side lid - Happich lock x	TB162W TB163W			
28-032	Yan kapak - standart kilit Side lid - standard lock x	TB162W TB163W			
28-032.1	Yan kapak - Happich kilit Side lid - Happich lock x	TB162W TB163W			
28-033	Yan kapak - standart kilit Side lid - standard lock x	TB162W TB163W			
28-033.1	Yan kapak - Happich kilit Side lid - Happich lock x	TB162W TB163W			
28-034	Yan kapak - standart kilit Side lid - standard lock x	TB162W TB163W			
28-034.1	Yan kapak - Happich kilit Side lid - Happich lock x	TB162W TB163W			
28-035	Yan kapak - standart kilit Side lid - standard lock x	TB162W TB163W			
28-035.1	Yan kapak - Happich kilit Side lid - Happich lock x	TB162W TB163W			
28-036	Yan kapak - standart kilit Side lid - standard lock x	TB162W TB163W	TB162Z TB163Z		

28-036.1	Yan kapak - Happich kilit Side lid - Happich lock x	TB162W TB163W	TB162Z TB163Z
28-037	Yan kapak - standart kilit Side lid - standard lock x	TB162W TB163W	
28-037.1	Yan kapak - Happich kilit Side lid - Happich lock x	TB162W TB163W	
28-038	Yan kapak - standart kilit Side lid - standard lock x	TB162W TB163W	
28-038.1	Yan kapak - Happich kilit Side lid - Happich lock x	TB162W TB163W	
28-040	Yan kapak - standart kilit Side lid - standard lock x		TB162Z TB163Z
28-040.1	Yan kapak - Happich kilit Side lid - Happich lock x		TB162Z TB163Z
28-041	Yan kapak - standart kilit Side lid - standard lock x		TB162Z TB163Z
28-041.1	Yan kapak - Happich kilit Side lid - Happich lock x		TB162Z TB163Z
28-042	Yan kapak - standart kilit Side lid - standard lock x		TB162Z TB163Z
28-042.1	Yan kapak - Happich kilit Side lid - Happich lock x		TB162Z TB163Z
28-043	Yan kapak - standart kilit Side lid - standard lock x		TB162Z TB163Z
28-043.1	Yan kapak - Happich kilit Side lid - Happich lock x		TB162Z TB163Z
28-044	Yan kapak - standart kilit Side lid - standard lock x		TB162Z TB163Z
28-044.1	Yan kapak - Happich kilit Side lid - Happich lock x		TB162Z TB163Z
28-045	Yan kapak - standart kilit Side lid - standard lock x		TB162Z TB163Z
28-045.1	Yan kapak - Happich kilit Side lid - Happich lock x		TB162Z TB163Z
28-046	Yan kapak - standart kilit Side lid - standard lock x		TB162Z TB163Z

28-046.1	Yan kapak - Happich kilit Side lid - Happich lock x			TB162Z TB163Z		
28-047	Yan kapak - standart kilit Side lid - standard lock x			TB162Z TB163Z		
28-047.1	Yan kapak - Happich kilit Side lid - Happich lock x			TB162Z TB163Z		
28-050	Yan kapak - Happich kilit Side lid - Happich lock x				TB162X TB163X	TB162Y TB163Y
28-051	Yan kapak - Happich kilit Side lid - Happich lock x				TB162X TB163X	TB162Y TB163Y
28-052	Yan kapak - Happich kilit Side lid - Happich lock x				TB162X TB163X	
28-053	Yan kapak - Happich kilit Side lid - Happich lock x				TB162X TB163X	
28-054	Yan kapak - Happich kilit Side lid - Happich lock x					TB162Y TB163Y
28-055	Yan kapak - Happich kilit Side lid - Happich lock x				TB162X TB163X	TB162Y TB163Y
28-056	Yan kapak - Happich kilit Side lid - Happich lock x				TB162X TB163X	TB162Y TB163Y
28-057	Yan kapak - Happich kilit Side lid - Happich lock x				TB162X TB163X	TB162Y TB163Y
28-058	Yan kapak - Happich kilit Side lid - Happich lock x				TB162X TB163X	TB162Y TB163Y
28-059	Yan kapak - Happich kilit Side lid - Happich lock x				TB162X TB163X	
28-060	Yan kapak - Happich kilit Side lid - Happich lock x					TB162Y TB163Y
28-070	Yan kapak - standart kilit Side lid - standard lock x	TB162W TB163W	TB162Z TB163Z	TB162X TB163X	TB162Y TB163Y	
28-075	Çamurluk kapakları Fender lids x	TB162W TB163W	TB162Z TB163Z	TB162X TB163X	TB162Y TB163Y	
28-080	Motor bakım kapağı Engine Inspection Lid x	TB162W TB163W	TB162Z TB163Z	TB162X TB163X	TB162Y TB163Y	
28-085	Sürücü bölmesi kapısı Drivers Compartment Lid x				TB162X TB163X	TB162Y TB163Y

28-090	Kilit Lock x	TB162W TB163W			
28-091	Kilit Lock x		TB162Z TB163Z		
28-092	Kilit Lock x			TB162X TB163X	
28-093	Kilit Lock x				TB162Y TB163Y
28-100	Kapı motoru hava hattı Door engine air line x	TB162W TB163W	TB162Z TB163Z	TB162X TB163X	TB162Y TB163Y

TEMSA	Ön kapı Front Door Vordertür	Group No : 28-010 Draw. Num. : x Rev. Date : Page : 1
	Vehicle Model: TB162W, TB162Z, TB162X, TB162Y, TB163W, TB163Z, TB163X, TB163Y	

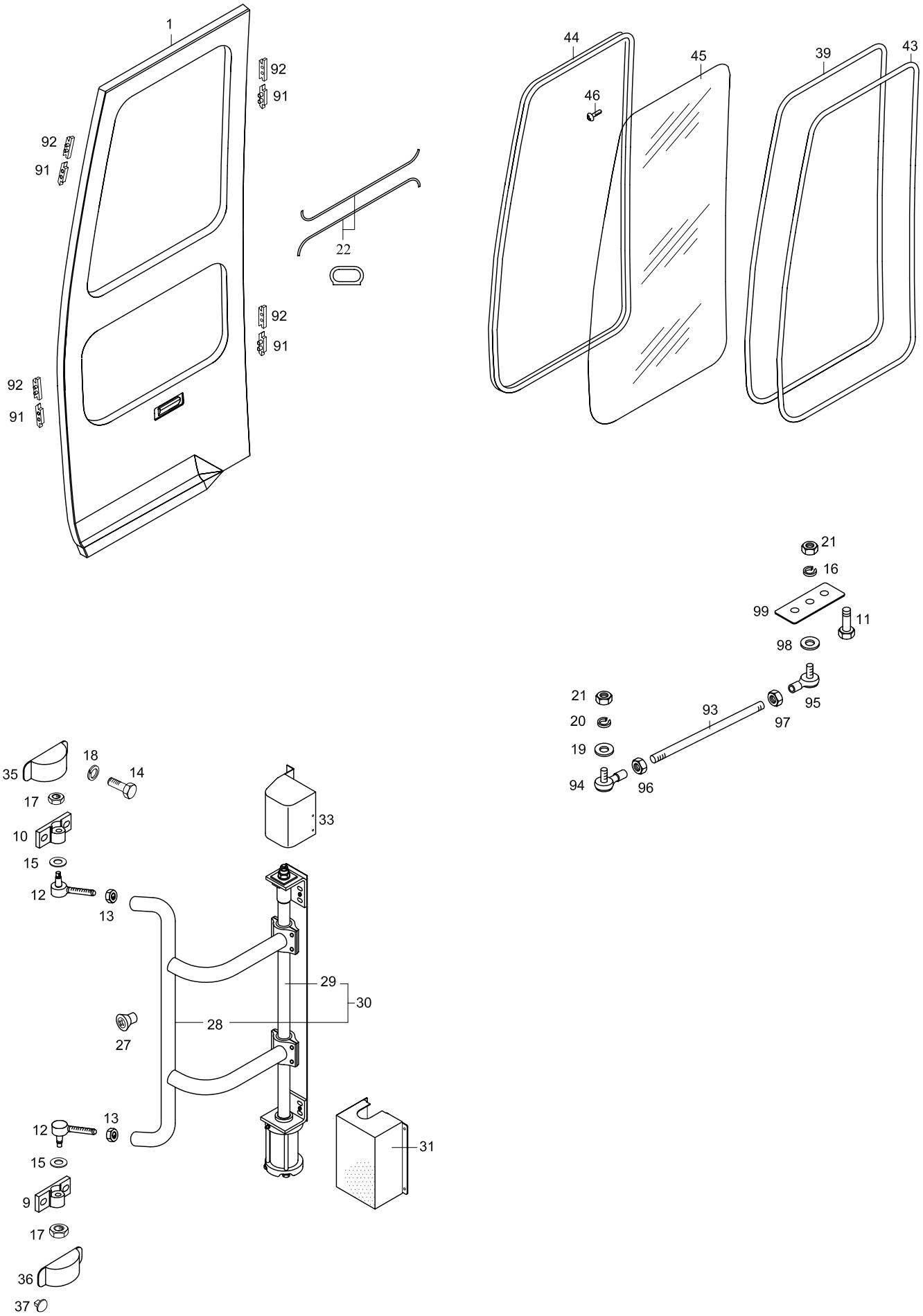

TEMSA	Ön kapı Front Door Vordertür	Group No : 28-010 Draw. Num. : x Rev. Date : Page : 2
	Vehicle Model: TB162W, TB162Z, TB162X, TB162Y, TB163W, TB163Z, TB163X, TB163Y	

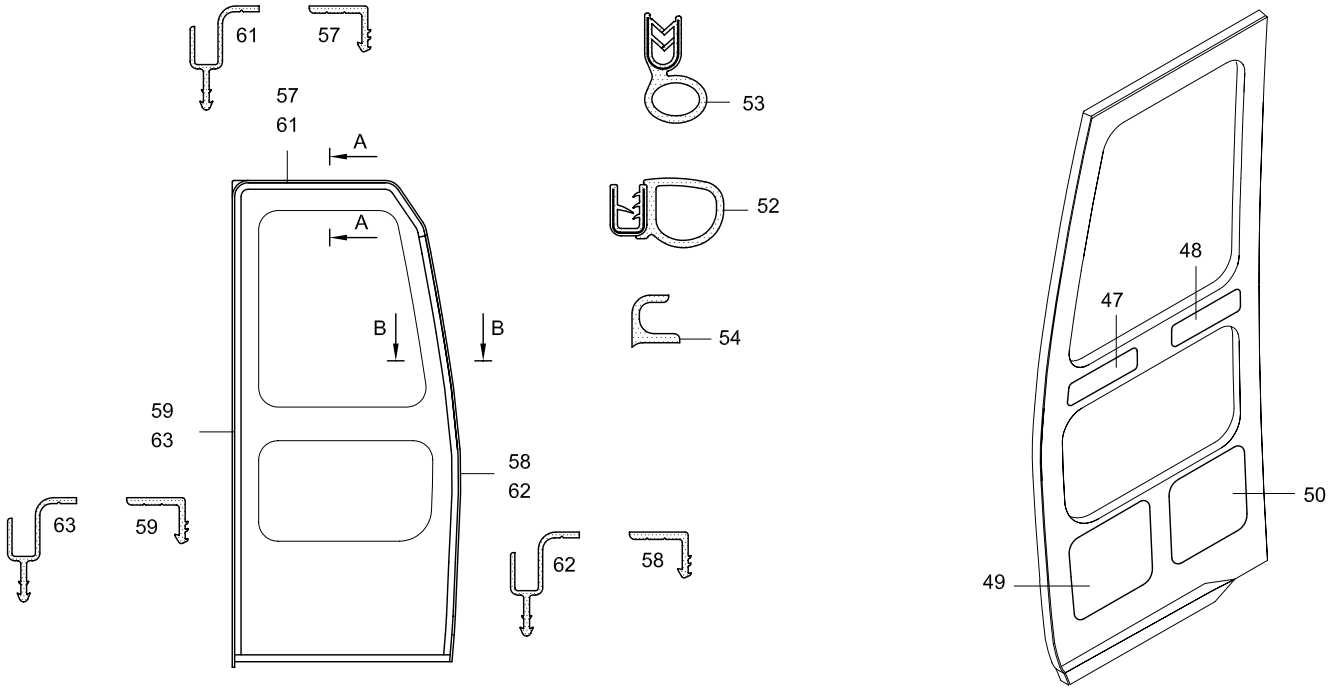

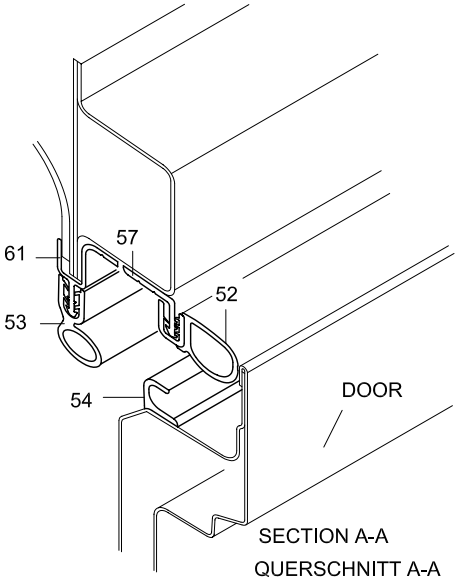

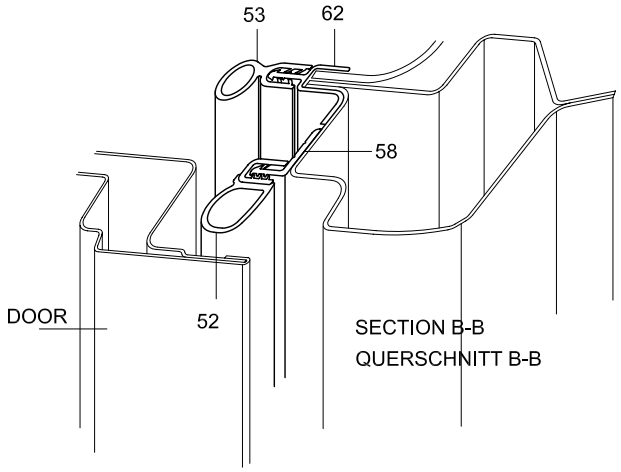

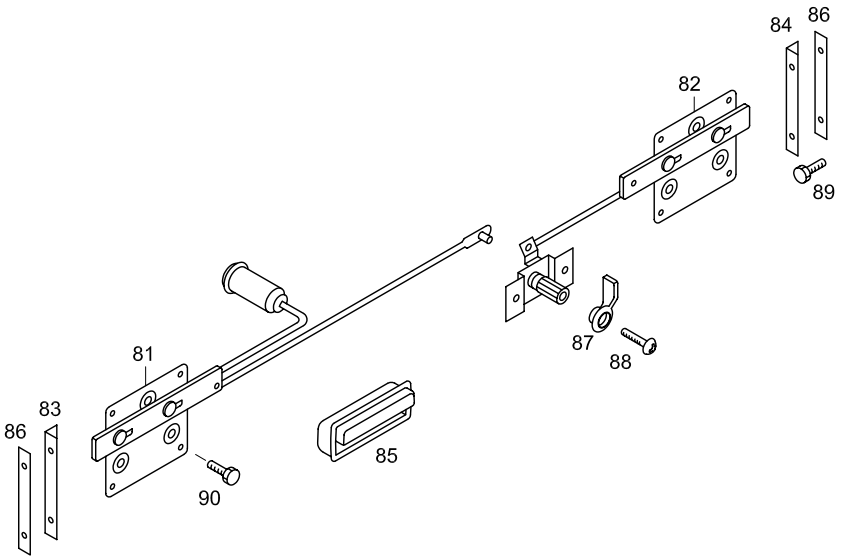

TEMSA	Ön kapı Front door Vordertür	Drw.no: TC299350-050/TC299355-014/015 Vehicle Model: **TB162W, TB162Z, TB162X, TB162Y** **TB163W, TB163Z, TB163X, TB163Y**	**28-010** RevDate: Page: 1

Pos	Part Number	Turkish	English	German	Qty	R/P	From	Up To	Original Number Supplier
1	YPTK257295Y	ÖN KAPI PANELİ	PANEL ASSY FRONT DOOR		1		1		
9	62077-30060-09Y	BRAKET	BRACKET		1		1		
10	62077-30060-10Y	BRAKET	BRACKET		1		1		
11	MF101227Y	CIVATA	BOLT		AR		1		M6*16
12	TC210707Y	ROD BAŞI	ROD END		2		1		
13	MF430845Y	KİLİTLİ SOMUN	NUT JAM		AR		1		M16*1.5
14	MF101285Y	CIVATA	BOLT		AR		1		M10*1.25*25
15	MF450006Y	PUL	WASHER PLAIN		AR		1		A10.5
16	MF450404Y	RONDELA	WASHER SPRING		AR		1		A6
17	62077-30130-20Y	SOMUN	NUT		2		1		
18	MF450406Y	RONDELA	WASHER SPRING		AR		1		A10
19	MF450005Y	PUL	WASHER PLAIN		AR		1		A8.5
20	MF450405Y	RONDELA	WASHER SPRING		AR		1		A8
21	MF430005Y	SOMUN	NUT		AR		1		M8
22	62202-90000-17Y	FİTİL	WEATHER STRIP		AR		1		
27	TC257580Y	TAPA	PLUG		2		1		
27	TC257582Y	TAPA	PLUG		2		1		
28	62077-90160-03X	ÖN KAPI KOLU	ARM FR. DOOR		1		1	010105	
29	TK260336-01X	KAPI MOTORU-REVAR	DOOR ENGINE		1		1	010105	
30	TK260336-11Y	KAPI MOTORU KOLU VE KAPAĞI KOMP	FR. DOOR ENG. ARM &COVER ASSY		1		150404		
31	62077-90120-11AY	KAPI MOTORU KAPAĞI	DOOR ENG. COVER		1		1	150404	
31	62077-96120-15Y	KAPI MOTORU KAPAĞI	DOOR ENG. COVER		1		150404		
33	62077-90120-05Y	ÜST KAPAK	COVER UPPER		1		1	150404	
33	62077-96120-10Y	ÜST KAPAK	COVER UPPER		1		150404		
35	62077-80160-35Y	ÜST KAPAK	COVER UPPER		1		1	150404	
35	62077-90160-06Y	ÜST KAPAK	COVER UPPER		1		150404		
36	62077-90130-37Y	ALT KAPAK	COVER LOWER		1		1	150404	
36	62077-90130-38Y	ALT KAPAK	COVER LOWER		1		150404		
37	TU344112Y	KLİP	CLIP		AR		1		
39	TC272555-02Y	FİTİL	WEATHER STRIP		AR		1		5mt
43	TC395014Y	FİTİL	WEATHER STRIP		1		1		L:6600mm
44	TC272555Y	CAM ÇERÇEVESİ	WINDOW FRAME		1		1		
45	TC257574-010AY	ÖN KAPI CAMI REZİSTANSLI	GLASS FRONT DOOR RESISTANCE		1		1		
46	MC395366Y	VİDA	SCREW TAPPING		AR		1		4.2*25
47	TC340170-02Y	PANEL	PANEL		1		1		

TEMSA	Ön kapı Front door Vordertür	Drw.no: TC299350-050/TC299355-014/015 Vehicle Model: **TB162W, TB162Z, TB162X, TB162Y** **TB163W, TB163Z, TB163X, TB163Y**	**28-010** RevDate: Page: 2

Pos	Part Number	Turkish	English	German	Qty	R/P	From	Up To	Original Number Supplier
48	TC340171-03Y	PANEL	PANEL		1		1		
49	TC340172-04Y	PANEL	PANEL		1		1		
50	TC340173-05Y	PANEL	PANEL		1		1		
52	TC257071-01Y	FİTİL	WEATHER STRIP		2		1		
53	TU299108Y	FİTİL	WEATHER STRIP		AR		1		L:4900mm
54	MC259000Y	FİTİL	WEATHER STRIP		1		1		
57	TC299355-08Y	FİTİL PROFİLİ	WEATHER STRIP PROFILE		1		1		
58	TC299355-09Y	FİTİL PROFİLİ	WEATHER STRIP PROFILE		1		1		
59	TC299355-10Y	FİTİL PROFİLİ	WEATHER STRIP PROFILE		1		1		
61	TC299355-21Y	İÇ FİTİL PROFİLİ	WEATHER STRIP INSIDE PROFILE		1		1		
62	TC299355-20Y	İÇ FİTİL PROFİLİ	WEATHER STRIP INSIDE PROFILE		1		1		
63	TC299355-19Y	İÇ FİTİL PROFİLİ	WEATHER STRIP INSIDE PROFILE		1		1		
81	TC259101Y	KİLİT KOMPLESİ - A	LOCK ASSY - A		1		1		
82	MC259073Y	KİLİT KOMPLESİ - B	LOCK ASSY - B		1		1		
83	MC258725Y	KİLİT BRAKETİ	PLATE LOCK		1		1		
84	MC273570Y	KİLİT BRAKETİ	PLATE LOCK		1		1		
85	MC257149Y	TUTAMAK	HANDLE		1		1		
86	MC258726Y	ŞİM	SHIM		AR		1		
87	MB049777Y	AÇMA KOLU	OPEN LEVER		1		1		
88	MF200183Y	VİDA	SCREW MACHINE		AR		1		A M5*15
89	MF100029Y	CIVATA	BOLT		AR		1		M6*20
90	MF200075Y	VİDA	SCREW MACHINE		AR		1		6*12
91	62077-90130-23Y	TUTUCU	RETAINER		6		1	010105	
91	62077-90130-24Y	TUTUCU	RETAINER		2		1	010105	
91	62077-90130-25Y	TUTUCU	RETAINER		2		010105		
92	62077-90130-21Y	TUTUCU	RETAINER		4		1	010105	
92	62077-90130-22Y	TUTUCU	RETAINER		4		1	010105	
92	62077-90130-28Y	TUTUCU	RETAINER		4		010105		
93	62077-60750-03Y	KLAVUZ KOL	GUIDE ARM		1		1		
94	62102-71650-00Y	ROD BAŞI	ROD END		1		1		
95	62102-61650-01Y	MAFSAL	JOINT		1		1		
96	MF430006Y	SOMUN	NUT		AR		1		M10*1.25
97	MS440031Y	SOMUN	NUT		AR		1		M10*1.25
98	MF450005Y	PUL	WASHER PLAIN		AR		1		A8.5
99	62077-71330-70Y	PLAKA	PLATE		1		1		

TEMSA	Orta kapı - çift kanat Center Door - double leaf Mitteltür	Group No : 28-020 Draw. Num. : x Rev. Date : Page : 1
	Vehicle Model: TB162W, TB162Z, TB163W, TB163Z	

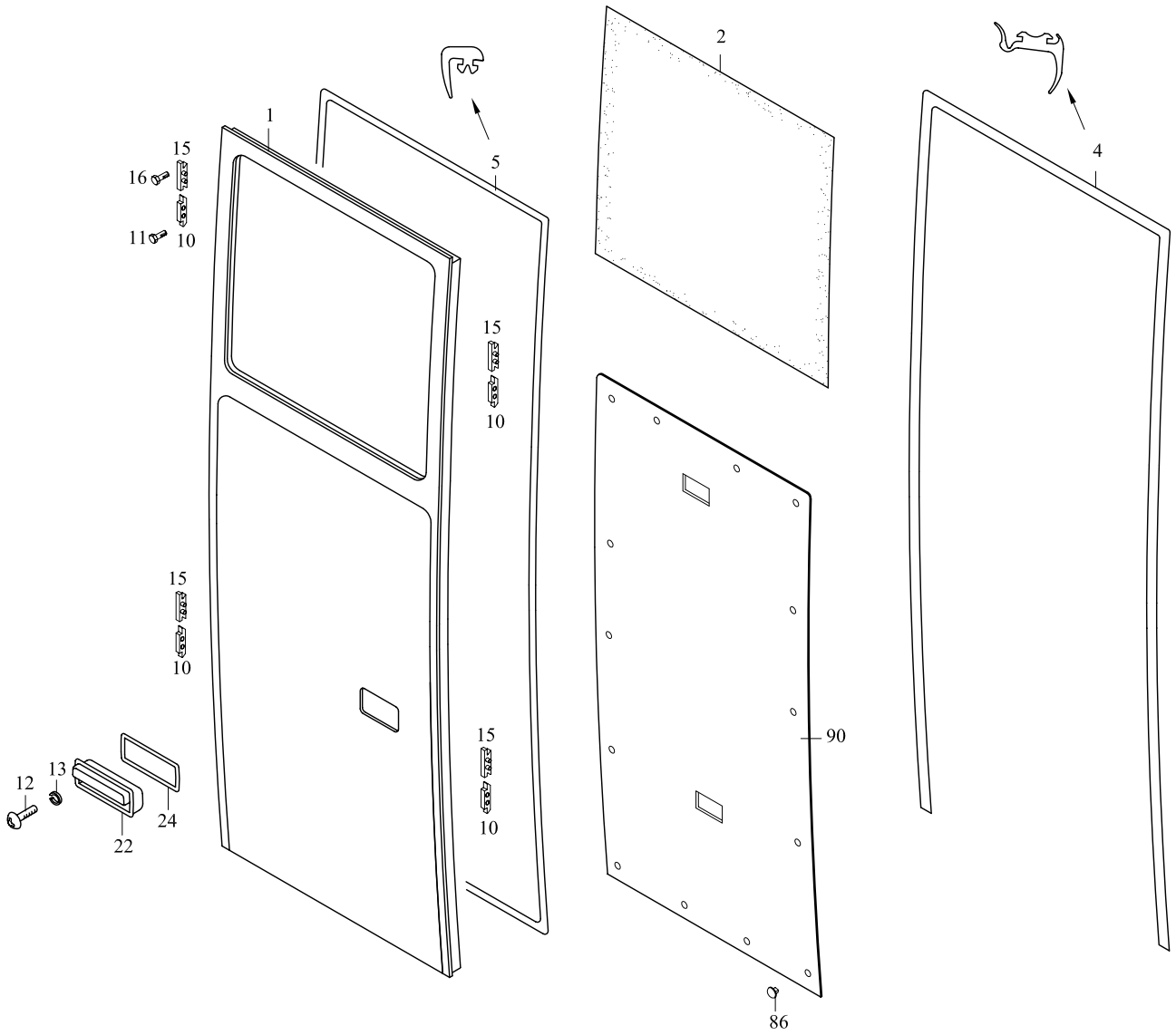

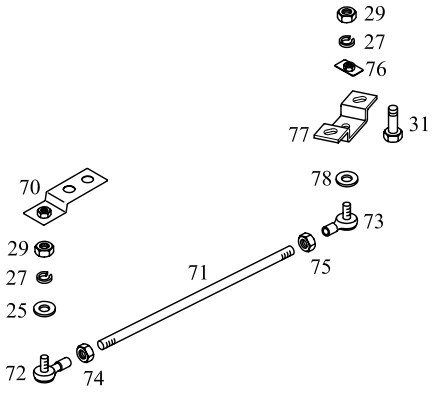

TEMSA	Orta kapı - çift kanat Center Door - double leaf Mitteltür	Group No : 28-020 Draw. Num. : x Rev. Date : Page : 2
	Vehicle Model: TB162W,	

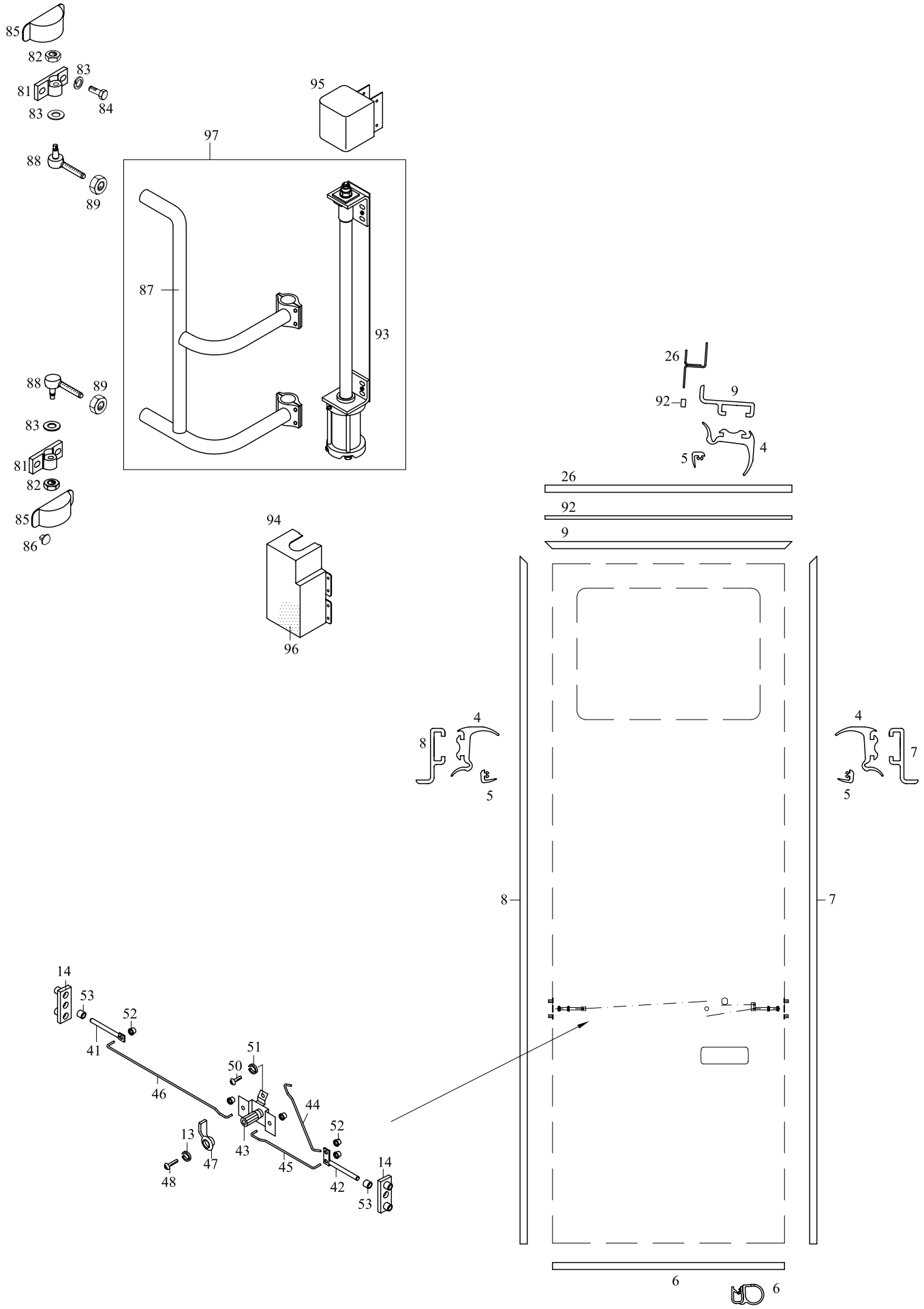

TEMSA	Orta kapı - tek kanat Center door - single leaf	Drw.no: 62077-96000-70Y Vehicle Model: **TB162W,TB162Z** **TB163W,TB163Z**	**28-020** RevDate: Page: 1

Pos	Part Number	Turkish	English	German	Qty	R/P	From	Up To	Original Number Supplier
1	62077-96100-70Y	ORTA KAPI	CENTER DOOR		1		1		
2	62077-96110-00Y	ORTA KAPI CAMI	GLASS, CENTER DOOR		1		1		
4	TN152104Y	ORTA KAPI FİTİLİ	WEATER STRIP, CENTER DOOR		1		1		ÇERÇEVE ÜZERİNDE AT THE FRAME
5	TN152105Y	ORTA KAPI FİTİLİ	WEATER STRIP, CENTER DOOR		1		1		KAPI ÜZERİNDE AT THE DOOR
6	TC257071-01Y	FİTİL	WEATHER STRIP		AR		1		ÇERÇEVE ÜZERİNDE AT THE FRAME
7	TN152107Y	ÇERÇEVE	DOOR FRAME		1		1		
8	TN152108Y	ÇERÇEVE	DOOR FRAME		1		1		
9	TN152109Y	ÇERÇEVE	DOOR FRAME		1		1		
10	TY151123Y	TUTUCU	RETAINER		4		1		kapı üzerinde at the door
11	TM151124Y	CIVATA	BOLT		AR		1		
12	MF200180Y	VİDA	SCREW		AR		1		
13	MF450403Y	RONDELA	WASHER SPRING		AR		1		
14	TM151112Y	KİLİT KARŞILIĞI	CONTROL PIN		2		1		
15	TM151113Y	TUTUCU	RETAINER		4		1		gövde üzerinde at the side body
16	TM151125Y	CIVATA	BOLT		AR		1		
22	TC323896Y	TUTAMAK	HANDLE		1		1		
24	TC258798Y	CONTA	PACKING		1		1		
25	MF450005Y	PUL	WASHER PLAIN		AR		1		
26	TN152114Y	U-PROFİL YAĞMUR OLUĞU	PROFILE-U		1		1		
27	MF450405Y	RONDELA	WASHER SPRING		AR		1		
29	MF430005Y	SOMUN	NUT		AR		1		
31	MF100055Y	CIVATA	BOLT		2		1		
41	TM151244Y	PİM	PIN		1		1		
42	TY151112Y	PİM	PIN		1		1		
43	TY151113Y	KİLİT	LOCK		1		1		
44	TY151114Y	KİLİTLEME TELİ	CONNECTING ROD		1		1		
45	TY151115Y	KİLİTLEME TELİ	CONNECTING ROD		1		1		
46	TN152111Y	KİLİTLEME TELİ	CONNECTING ROD		1		1		
47	MB049777Y	AÇMA KOLU	OPEN LEVER		1		1		
48	MF200183Y	VİDA	SCREW		AR		1		
50	MF200075Y	VİDA	SCREW		AR		1		
51	MF450404Y	RONDELA	WASHER SPRING		AR		1		
52	MS470431Y	ROD KLİBİ	CLIP ROD		6		1		
53	TM151216BY	PLASTİK BURÇ	BUSHING		2		1		
70	62077-41270-00Y	BRAKET	BRACKET		1		1		

TEMSA	Orta kapı - tek kanat Center door - single leaf	Drw.no: 62077-96000-70Y Vehicle Model: **TB162W,TB162Z** **TB163W,TB163Z**	**28-020** RevDate: Page: 2

Pos	Part Number	Turkish	English	German	Qty	R/P	From	Up To	Original Number Supplier
71	62077-60750-02Y	KLAVUZ KOL	GUIDE ARM		1		1		
72	62102-61650-00EY	MAFSAL	JOINT		1		1		
73	62102-61650-01Y	MAFSAL	JOINT		1		1		
74	MF430006Y	SOMUN	NUT		AR		1		
75	MS440031Y	SOMUN	NUT		AR		1		
76	62077-61750-10Y	PLAKA	PLATE		1		1		
77	62077-61750-11Y	PLAKA	PLATE		1		1	?	
77	62077-94130-01Y	PLAKA	PLATE		1		?		
78	MF450005Y	PUL	WASHER PLAIN		1		1		
81	TM151372Y	BRAKET	BRACKET		2		1		
82	62077-30130-20Y	SOMUN	NUT		2		1		
83	MF450006Y	PUL	WASHER PLAIN		AR		1		
84	TF101285Y	CIVATA	BOLT		4		1		
85	62077-70028-71Y	KAPAK	COVER		2		1	?	DELETE
85	TM151271Y	KAPAK	COVER		2		?		
86	TU344112Y	KLİP	CLIP		10		1		
87	62077-90140-70X	ORTA KAPI KOLU	ARM CENTER DOOR		1		1		
88	TC210707Y	ROD BAŞI	ROD END		2		1		
89	MF430845Y	SOMUN	NUT		2		1		
90	62077-96000-15Y	ABS PANEL	ABS PANEL		1		1		
92	TM246141Y	FİTİL	WEATHER STRIP		AR		1		L:1000mm
93	TK260336-01Y	KAPI MOTORU-REVAR	DOOR ENGINE- REVAR		1		1		
93	TK260336-21Y	KAPI MOTORU-REVAR	DOOR ENGINE- REVAR		1		1		
94	62077-90140-04Y	KAPAK - ALT	COVER - LOWER		1		1	150504	
94	62077-96120-16Y	KAPAK - ALT	COVER - LOWER		1		150504		
95	62077-90140-12Y	KAPAK - ÜST	COVER - UPPER		1		1	150504	
95	62077-90140-13Y	KAPAK - ÜST	COVER - UPPER		1		150504		
96	TES40451-16Y	SUNI DERİ	LEATHER		AR		1		

TEMSA	Orta kapı - çift kanat (İsrail) Center Door - double leaf (Israel) Mitteltür	Group No : 28-022 Draw. Num. : x Rev. Date : Page : 1
	Vehicle Model: TB162W,	

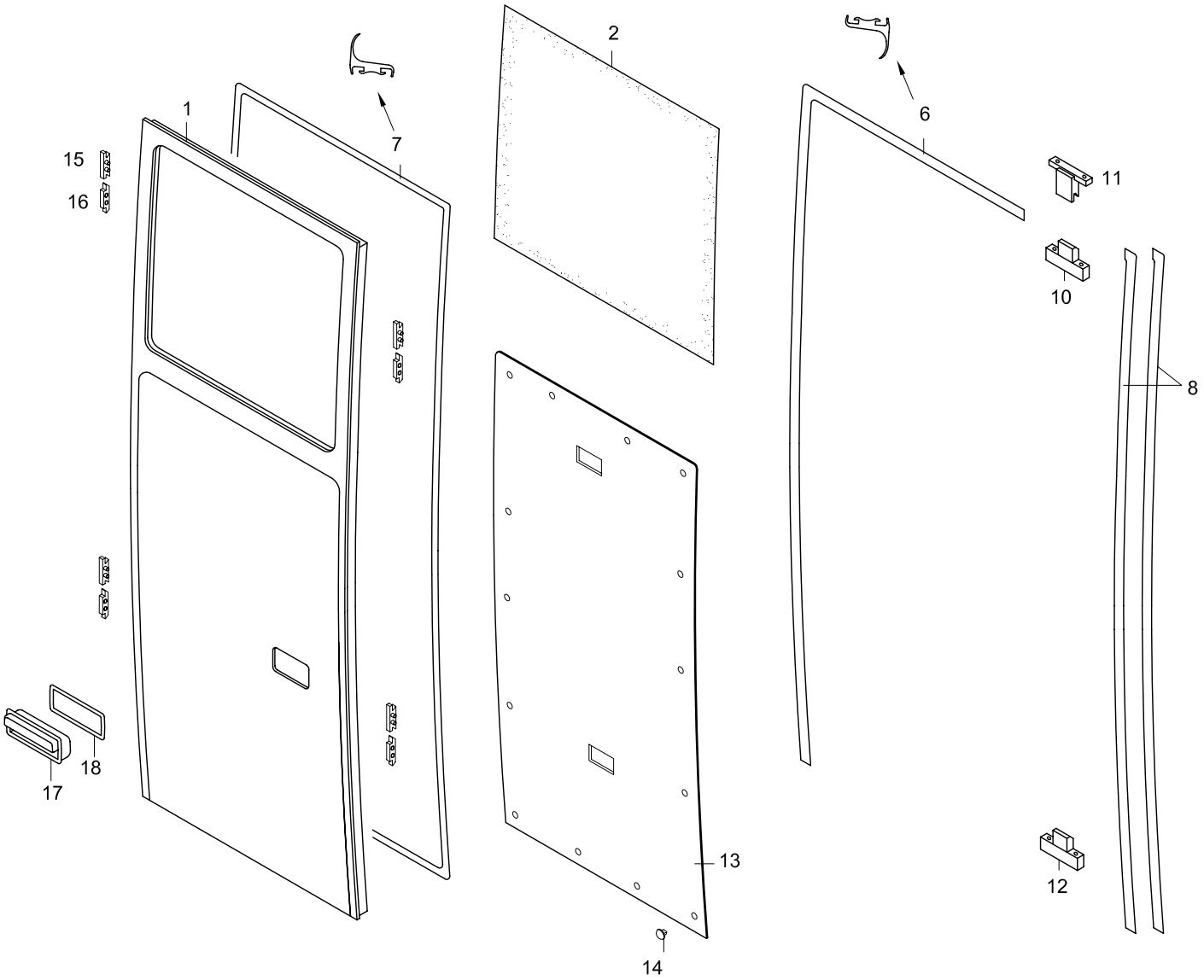

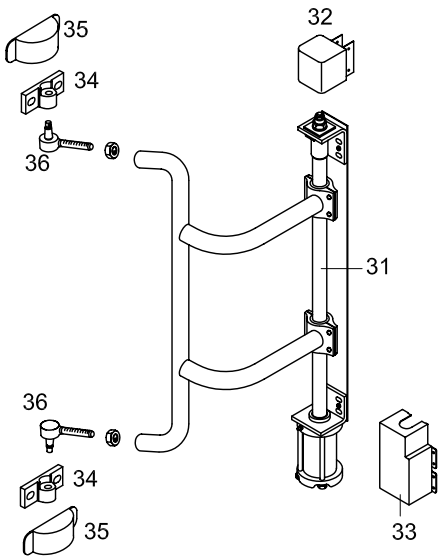

TEMSA	Orta kapı - çift kanat (İsrail) Center Door - double leaf (Israel) Mitteltür	Group No : 28-022 Draw. Num. : x Rev. Date : Page : 2
	Vehicle Model: TB162W,	

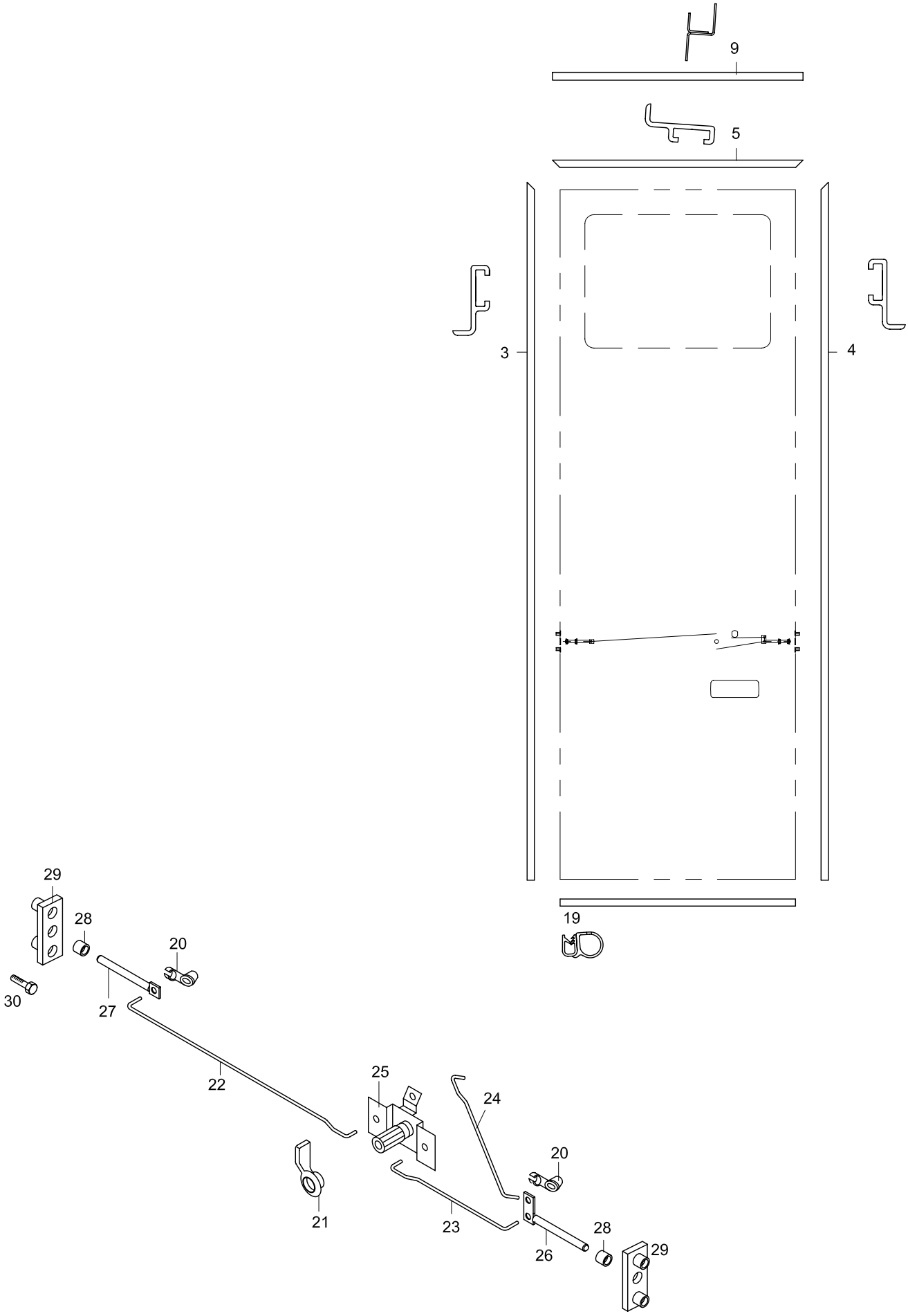

TEMSA	Orta kapı - tek kanat Center door - single leaf (Israel)	Drw.no: 62077-98500-70Y Vehicle Model: **TB162W, İsrael**	**28-022** RevDate: Page: 1

Pos	Part Number	Turkish	English	German	Qty	R/P	From	Up To	Original Number Supplier
1	62077-98550-70Y	ORTA KAPI KARKASI	CENTER DOOR ASSY		1		230704		
2	62077-98550-00Y	KAPI CAMI	GLASS DOOR		1		230704		
3	62077-98300-46Y	ÇERÇEVE	DOOR FRAME		1		230704		
4	62077-94100-47Y	ÇERÇEVE	DOOR FRAME		1		230704		
5	62077-98300-48Y	ÇERÇEVE	DOOR FRAME		1		230704		
6	62077-98550-49Y	GÖVDE FITILI	WEATHER STRIP		1		230704		gövde üzerinde at the side body
7	62077-98550-50Y	KAPI FITILI	WEATHER STRIP		1		230704		
8	62077-98550-55Y	BALONLU KAPI FITILI	WEATHER STRIP		2		230704		
9	TN152114Y	YAGMUR OLUGU	DRAIN PLATE		1		230704		
10	62077-94300-63Y	KILIT DILI	LOCK CONTROL		1		1		
11	62077-94300-64Y	KILIT DILI	LOCK CONTROL		1		1		
12	62077-98550-05Y	KAPI ALTI BRAKETI	LOCK CONTROL		1		1		
13	62077-98550-15Y	ABS PANEL	ABS PANEL		1		1		
14	TU344112Y	X'MAS TREE CLIP	X'MAS TREE CLIP		1		1		
15	TM151113Y	TUTUCU (GOVDE UZERI)	RETAINER BODY		2		1		
16	TM151114Y	TUTUCU (KAPI ÜZERI)	RETAINER DOOR		2		1		
17	TC323896Y	TUTAMAK KOMPLESI	HANDLE		1		1		
18	TC258798Y	CONTA	O-RING		1		1		
19	TC257071-01Y	FİTİL	WEATHER STRIP		mt		1		
20	MS470431Y	ROD KLİBİ	CLIP ROD		6		1		
21	MB049777Y	AÇMA KOLU	OPEN LEVER		1		1		
22	TN152111Y	KİLİTLEME TELİ	CONNECTING ROD		1		1		
23	TY151115Y	KİLİTLEME TELİ	CONNECTING ROD		1		1		
24	TY151114Y	KİLİTLEME TELİ	CONNECTING ROD		1		1		
25	TY151113Y	KİLİT	LOCK		1		1		
26	TY151112Y	KİLİTLEME TELİ	CONNECTING ROD		1		1		
27	TM151244Y	KİLİTLEME TELİ	CONNECTING ROD		1		1		
28	TM151216BY	BURÇ	BUSHING		2		1		
29	62077-94000-15Y	KILIT KARŞILIĞI	BRACKET CONTROL		2		1		
30	62077-94300-36Y	KILIT CIVATASI	BOLT		4		1		
31	TK260336-21Y	KAPI MOTORU KOMPLE	DOOR ENG. ASSY		1		1		
32	62077-90140-13Y	KAPAK	COVER		1		1		
33	62077-96120-16Y	KAPI MOTORU ALT KAPAK	COVER LOWER DOOR ENG		1		1		
34	TM151372Y	BRAKET	BRACKET		2		1		
35	TM151271Y	ÜST KAPAK	COVER UPPER		2		1		

TEMSA	Orta kapı - tek kanat Center door - single leaf (Israel)	Drw.no: 62077-98500-70Y Vehicle Model: **TB162W, İsrael**	**28-022** RevDate: Page: 2

Pos	Part Number	Turkish	English	German	Qty	R/P	From	Up To	Original Number Supplier
36	TC210707Y	ROD BAŞI	ROD END		2		1		

TEMSA	Orta kapı - çift kanat Center Door - double leaf Mitteltür	Group No : 28-025 Draw. Num. : x Rev. Date : Page : 1
	Vehicle Model: TB162X, TB162Y, TB163X, TB163Y	

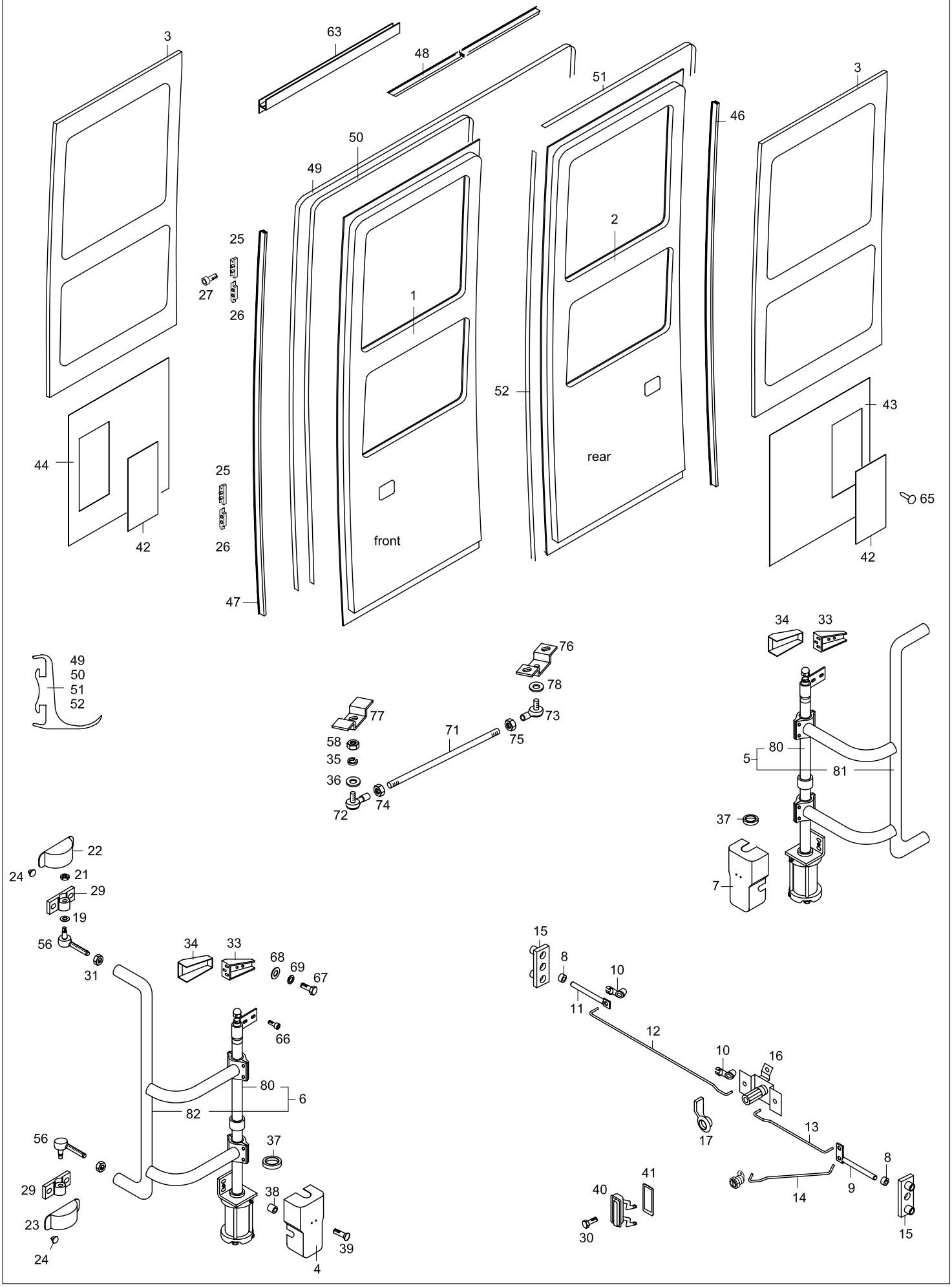

TEMSA	Orta kapı - çift kanat Center Door - double leaf Mitteltür	Drw.no: 62077-99500-70Y Vehicle Model: TB162X, TB162Y TB163X, TB163Y	28-025 RevDate: Page: 1

Pos	Part Number	Turkish	English	German	Qty	R/P	From	Up To	Original Number Supplier
1	62077-99150-70Y	ORTA KAPI NO.1	CENTER DOOR NO.1		1	X	150504		
2	62077-99150-71Y	ORTA KAPI NO.1	CENTER DOOR NO.2		1	X	150504		
3	62077-94100-03Y	ORTA KAPI CAMI	GLASS CENTER DOOR		2		1		
4	62077-94000-04Y	KAPI MOTORU KAPAĞI	DOOR ENGINE COVER		1		1		
5	62077-94120-70Y	KAPI MOTORU VE KOLU KOMPLE	DOOR ENGINE AND ARM		1		1		
6	62077-94120-71Y	KAPI MOTORU VE KOLU KOMPLE	DOOR ENGINE AND ARM		1		1		
7	TM151388Y	KAPI MOTORU KAPAĞI	DOOR ENGINE COVER		1		1		
8	TM151216Y	BURÇ	BUSHING		2		1		
9	TY151112Y	KİLİT MİLİ	CONNECTING ROD		2		1		
10	MS470431Y	ROD KLİBİ	CLIP ROD		2		1		
11	TM151244Y	KİLİT MİLİ	CONNECTING ROD		2		1		
12	TN152111Y	KİLİT MİLİ	CONNECTING ROD		2		150504		
13	TY151114Y	KİLİT MİLİ	CONNECTING ROD		2		150504		
14	TY151115Y	KİLİT MİLİ	CONNECTING ROD		2		150504		
15	62077-94000-15Y	KİLİT KARŞILIĞI	BRACKET, CONTROL PIN		2		1		
16	TY151113Y	KİLİT GÖBEĞİ	LOCK ASSY		1		150504		
17	MB049777	KİLİT KOLU	OPEN LEVER		1		150504		
18	TF101285Y	CIVATA	BOLT		AR		1		
19	MF450006Y	PUL	WASHER PLAIN		AR		1		A10.5
20	MF450406Y	RONDELA	WASHER SPRING		AR		1		A10
21	62077-30130-20Y	SOMUN	NUT		AR		1		
22	TM151271Y	ÜST KAPAK	COVER UPPER		2		1		
23	TM151272Y	ALT KAPAK	COVER LOWER		2		1		
24	TC395816Y	KLİP	CLIP		AR		1		
25	TM151119Y	TUTUCU gövde için	RETAINER for body		4		1		
26	TM151114Y	TUTUCU gövde için	RETAINER for door		4		1		
27	TM151124Y	CIVATA M8*40	ALLEN BOLT		AR		1		
29	TM151372Y	BRAKET	BRACKET		2		1		
30	TF140065Y	FLANŞLI CIVATA	BOLT FLANGE		AR		1		M10*25
31	MF430845Y	KİLİTLİ SOMUN	NUT JAM		AR		1		M16*1.5
33	62077-94000-33Y	BRAKET	BRACKET		2		1		
33	TY151155Y	BRAKET	BRACKET		2		1		
34	TM151269Y	KAPAK - ARKA	COVER		2		1		
34	TM151162Y	KAPAK - ARKA	COVER		2		1		
35	MF450405Y	RONDELA	WASHER		AR		1		A8

TEMSA	Orta kapı - çift kanat Center Door - double leaf Mitteltür	Drw.no: 62077-99500-70Y Vehicle Model: TB162X, TB162Y TB163X, TB163Y	28-025 RevDate: Page: 2

Pos	Part Number	Turkish	English	German	Qty	R/P	From	Up To	Original Number Supplier
36	MF450005Y	PUL	WASHER PLAIN		AR		1		A8.5
37	TM151145Y	BOĞAZ KEÇESİ	O-RING		AR		1		
38	TM151159X	ARA PARÇA	SPACER		2		150504 2004		
39	MF201576Y	VİDA	SCREW MACHINE		AR		1		A M6*25
40	TC323896Y	TUTAMAK	HANDLE		2		1		
41	TC258798Y	CONTA	PACKING		2		1		
42	62077-94120-80Y	KAPAK	COVER		2		1		
43	62077-94110-13Y	İÇ PANEL	PANEL INNER		1		1		
44	62077-94110-14Y	İÇ PANEL	PANEL INNER		1		1		
46	62077-94300-46Y	ÇERÇEVE	FRAME		1	X	150504		
47	62077-94300-47Y	ÇERÇEVE	FRAME		1	X	150504		
48	62077-94300-48Y	ÇERÇEVE	FRAME		1	X	150504		
49	62077-94300-49Y	KAPI FİTİLİ	WEATHER STRIP DOOR		1	X	150504		
50	62077-99300-50Y	KAPI FİTİLİ	WEATHER STRIP DOOR		1	X	150504		
51	62077-99300-56Y	KAPI FİTİLİ	WEATHER STRIP DOOR		1	X	150504		
52	62077-94300-55Y	KAPI FİTİLİ	WEATHER STRIP DOOR		1	X	150504		
56	TC210707Y	ROD BAŞI	ROD END		2		1		
58	MF430005Y	SOMUN	NUT		AR		1		M8
63	62077-94100-00Y	YAĞMUR OLUĞU	MOULDING DRIP		1		1		
65	TC311650Y	PLASTİK PERÇİN	PLASTIC RIVET		AR		1		
66	TF101259Y	CIVATA	BOLT		AR		1		M8*35
67	MF101227Y	CIVATA	BOLT		AR		1		M6*16
68	MF450004Y	PUL	WASHER		AR		1		A6.4
69	MF450404Y	RONDELA	WASHER SPRING		AR		1		A6
71	62077-94130-02Y	KLAVUZ KOL	GUIDE ARM		2		1		
72	62102-61650-00EY	MAFSAL	JOINT		1		1		
73	62102-61650-01Y	MAFSAL	JOINT		1		1		
74	MF430006Y	SOMUN	NUT		AR		1		M10*1.25
75	MS440031Y	SOMUN	NUT		AR		1		M10*1.25
76	62077-94130-01Y	PLAKA	PLATE		1		1		
77	62077-61750-10Y	PLAKA	PLATE		1		1		
78	MF450005Y	PUL	WASHER PLAIN		AR		1		A8.5
80	TM151375X	KAPI MOTORU	DOOR ENGINE		2		1		REVAR
81	62077-94120-01X	KAPI KOLU	ARM DOOR		1		1		
82	62077-94120-02X	KAPI KOLU	ARM DOOR		1		1		

TEMSA	Yan kapaklar - standart kilit Side lids - standard lock Seiten deckeln	Group No : 28-030 Draw. Num. : x Rev. Date :
	Vehicle Model: TB162W, TB163W,	Page : 1

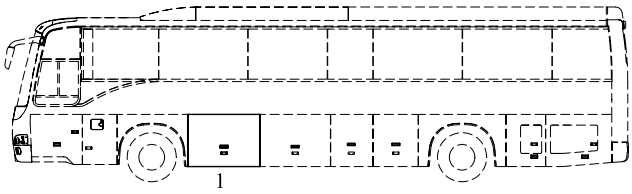

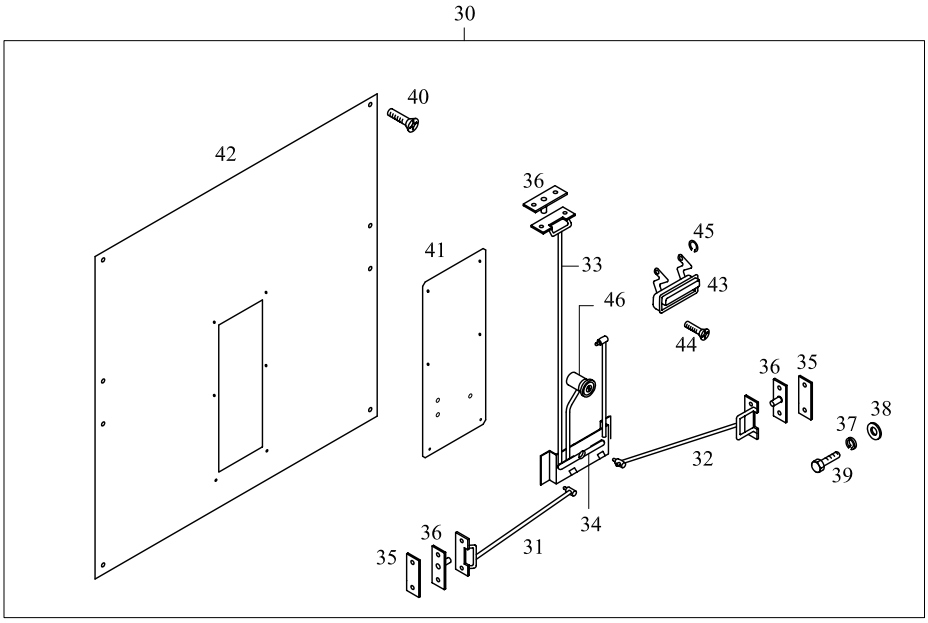

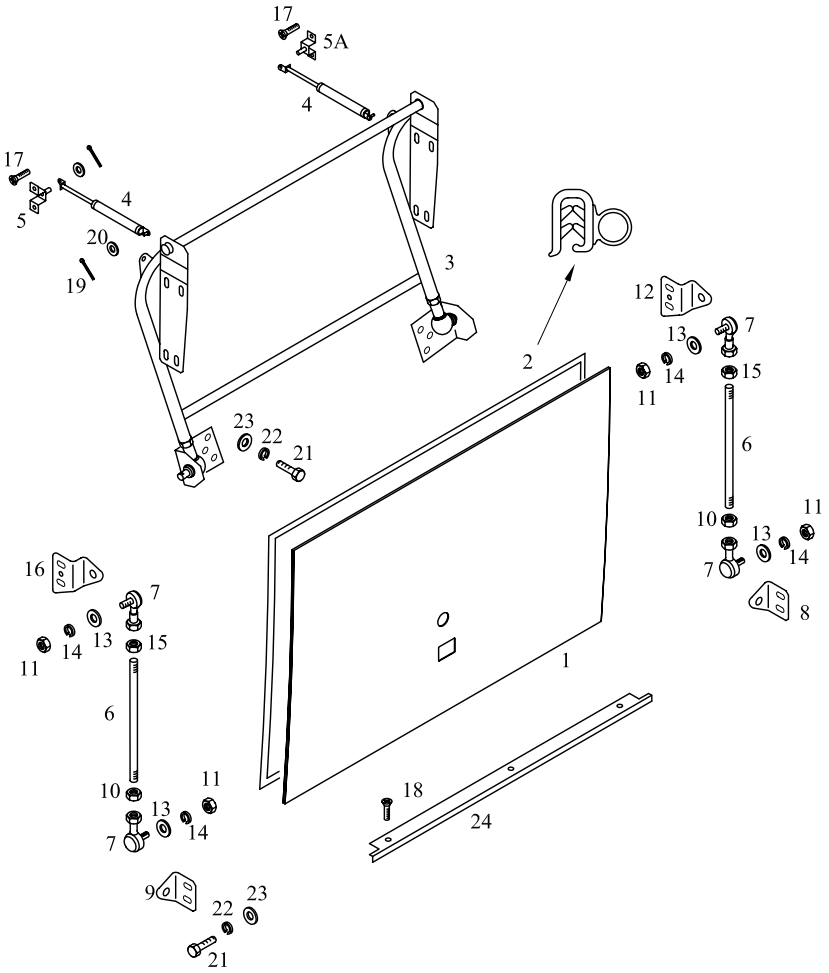

TEMSA	Yan kapak - standart kilit Side lid - standard lock Seiten deckeln	Drw.no 62102-96010-02Y Vehicle Model: **TB162W** **TB163W**	**28-030** RevDate: Page: 1

Pos	Part Number	Turkish	English	German	Qty	R/P	From	Up To	Original Number Supplier
1	62102-96550-70Y	YAN KAPAK	SIDE LID		1		1	150504	
1	62102-96550-70KY	YAN KAPAK	SIDE LID		1		150504		
2	TB112268Y	FİTİL	WEATHER STRIP		AR		1		
3	62102-96160-73Y	BAGAJ KOLU	ARM ASSY HINGE		1		1		
4	62102-70038-06Y	AMORTİSÖR	STAY DAMPER		2		1	150504	
4	62102-70028-01Y	AMORTİSÖR	STAY DAMPER		2		150504		
5	62102-11290-77Y	BRAKET	BRAKET		1		1		
5A	62102-70018-01Y	BRAKET	BRAKET		1		1		
6	62102-91570-00Y	ROD	ROD		2		1		
7	62102-61650-01Y	ROTIL	ROD END		2		1		
8	62102-91110-04Y	BRAKET	BRACKET		2		1		
9	62102-91110-05Y	BRAKET	BRACKET		2		1		
10	MS440031Y	SOMUN M10x1,25-5,6	NUT		AR		1		
11	MF430005PY	SOMUN M8	NUT		AR		1		
12	62102-91110-08Y	BRAKET	BRACKET		2		1		
13	MF450005PY	PUL	WASHER PLAIN		AR				
14	MF450405Y	RONDELA	WASHER SPRING		AR		1		
15	MF430006Y	SOMUN	NUT		AR		1		
16	62102-91110-12Y	BRAKET	BRACKET		2		1		
17	MC386109	VİDA	SCREW TAPPING		AR		1		
18	MF453615Y	VİDA	SCREW TAPPING		AR		1		
19	MF472037Y	KOPİLYA	PIN SPLIT		AR		1		
20	MF450154Y	PUL	WASHER PLAIN		AR		1		
21	MF100057Y	CIVATA M8*1.25*25	BOLT		AR		1		
22	MF450405Y	RONDELA	WASHER SPRING		AR		1		
23	MF450154Y	PUL	WASHER PLAIN		AR		1		
24	62102-96900-01Y	ALUMİNYUM ÇITA	PLATE EDGE		1		1	150504	
24	61714-96900-01Y	ALUMİNYUM ÇITA	PLATE EDGE		1		150504		
30	62102-96500-70Y	KİLİT	LOCK ASSY		1		1		
31	62102-97510-86Y	KİLİT TELİ	CONNECTING ROD		1		1		
32	62102-97510-76Y	KİLİT TELİ	CONNECTING ROD		1		1		
33	62102-80510-83Y	KİLİT TELİ	CONNECTING ROD		1		1		
34	62102-80340-70Y	KİLİT MEKANİZMASI	LINK ASSY		1		1		
35	TU150136Y	ARA PARÇA	SHIM		2		1		
36	MC324121Y	TUTUCU	STRIKE ASSY		2		1		

TEMSA	Yan kapak - standart kilit Side lid - standard lock Seiten deckeln	Drw.no 62102-96010-70/71 Vehicle Model: **TB162W** **TB163W**	**28-030** RevDate: Page: 2

Pos	Part Number	Turkish	English	German	Qty	R/P	From	Up To	Original Number Supplier
37	MF450404Y	RONDELA	WASHER SPRING		AR		1		
38	MF450004Y	PUL	WASHER PLAIN		AR		1		
39	MF100029Y	CIVATA M6*1*20	BOLT		AR		1		
40	MF453017X	VİDA	SCREW		AR		1		
41	62102-97510-01Y	PANEL	PANEL		1		1		
42	62102-97510-96Y	PANEL	PANEL		1		1		
43	TC323896Y	TUTAMAK	HANDLE		1		1		
44	MF453615PY	VİDA	SCREW		AR		1		
45	MF522401Y	SEGMAN	RING SNAP		AR		1		
46	62102-94200-01X	KİLİT	LOCK ASSY		AR		1		

TEMSA	Yan kapaklar - Happich kilit Side lids - Happich lock Seiten deckeln	Group No : 28-030.1 Draw. Num. : x Rev. Date : Page : 1
	Vehicle Model: TB162W, TB163W,	

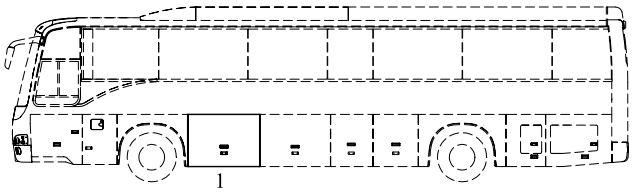

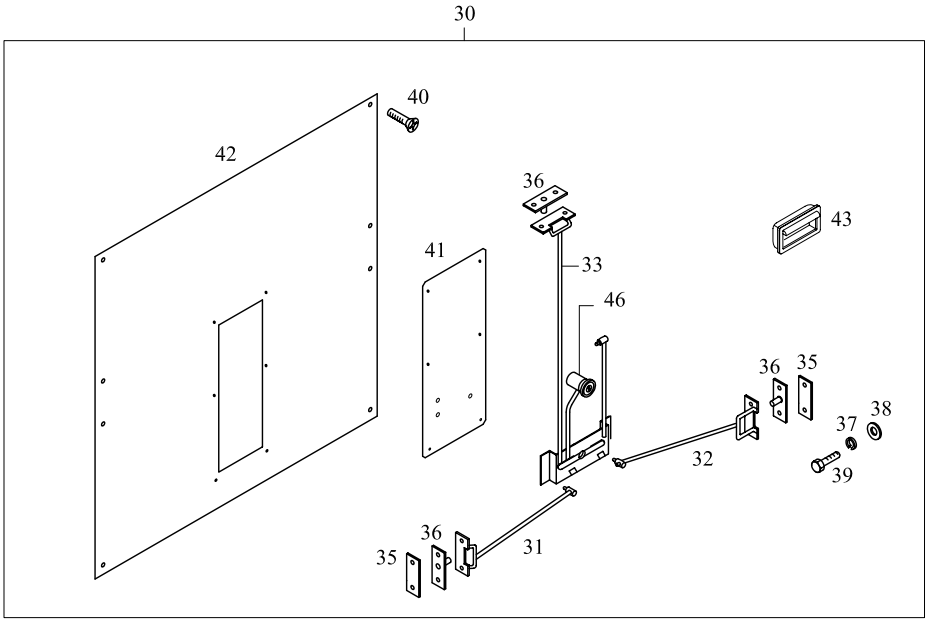

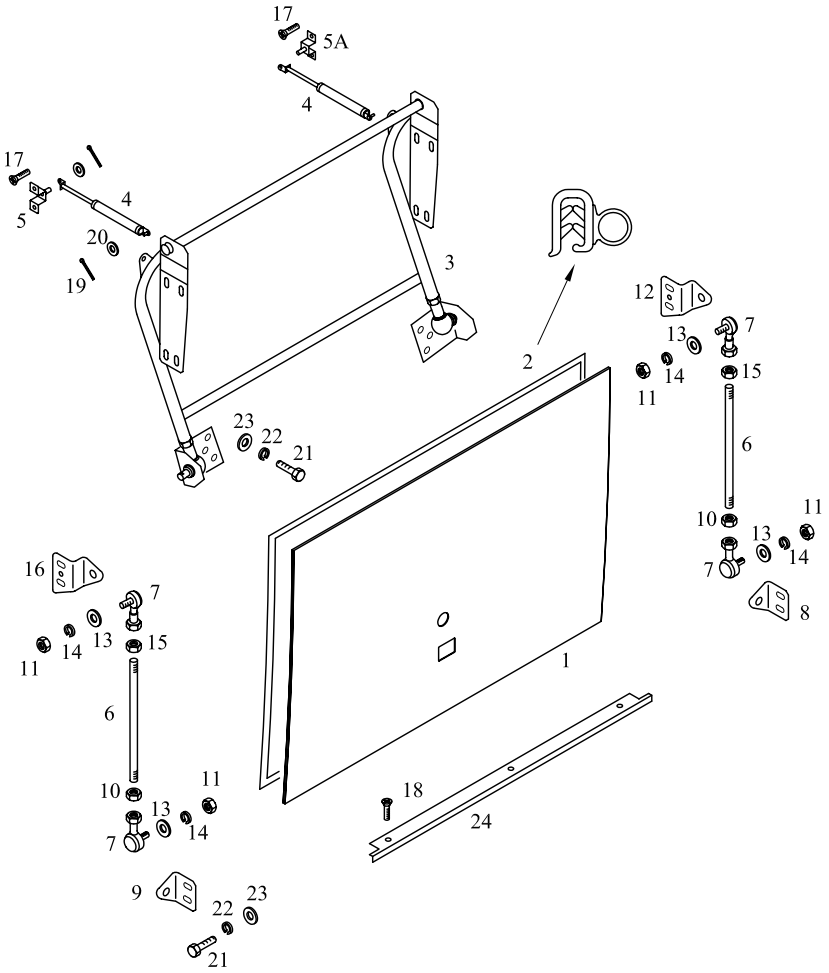

TEMSA	Yan kapak - Happich kilit Side lid - - Happich lock Seiten deckeln	62102-96810-18Y Vehicle Model: **TB162W** **TB163W**	**28-030.1** RevDate: Page: 1

Pos	Part Number	Turkish	English	German	Qty	R/P	From	Up To	Original Number Supplier
1	62102-96750-70KY	YAN KAPAK	SIDE LID		1		150504		
2	TB112268Y	FİTİL	WEATHER STRIP		mt		1		
3	62102-96160-73Y	BAGAJ KOLU	ARM ASSY HINGE		1		1		
4	62102-70028-01Y	AMORTİSÖR	STAY DAMPER		2		150504		
5	62102-11290-77Y	BRAKET	BRAKET		1		1		
5A	62102-70018-01Y	BRAKET	BRAKET		1		1		
6	62102-91570-00Y	ROD	ROD		2		1		
7	62102-61650-01Y	ROTIL	ROD END		2		1		
8	62102-91110-04Y	BRAKET	BRACKET		1		1		
9	62102-91110-05Y	BRAKET	BRACKET		1		1		
10	MS440031Y	SOMUN M10x1,25-5,6	NUT		AR		1		
11	MF430005PY	SOMUN M8	NUT		AR		1		
12	62102-91110-08Y	BRAKET	BRACKET		1		1		
13	MF450005PY	PUL	WASHER PLAIN		AR		1		
14	MF450405Y	RONDELA	WASHER SPRING		AR		1		
15	MF430006Y	SOMUN	NUT		AR		1		
16	62102-91110-12Y	BRAKET	BRACKET		1		1		
17	MC386109	VİDA	SCREW TAPPING		AR		1		
18	MF453615Y	VİDA	SCREW TAPPING		AR		1		
19	MF472037Y	KOPİLYA	PIN SPLIT		AR		1		
20	MF450154Y	PUL	WASHER PLAIN		AR		1		
21	MF100057Y	CIVATA M8*1.25*25	BOLT		AR		1		
22	MF450405Y	RONDELA	WASHER SPRING		AR		1		
23	MF450154Y	PUL	WASHER PLAIN		AR		1		
24	61714-96900-01Y	ALUMİNYUM ÇITA	PLATE EDGE		4		1		
30	62102-96700-71Y	KİLİT	LOCK ASSY		1		1		
31	62102-97710-86Y	KİLİT TELİ	CONNECTING ROD		1		1		
32	62102-97710-76Y	KİLİT TELİ	CONNECTING ROD		1		1		
33	62102-87510-83Y	KİLİT TELİ	CONNECTING ROD		1		1		
35	TU150136Y	ARA PARÇA	SHIM		2		1		
36	MC324121Y	TUTUCU	STRIKE ASSY		2		1		
37	MF450404Y	RONDELA	WASHER SPRING		AR		1		
38	MF450004Y	PUL	WASHER PLAIN		AR		1		
39	MF100029Y	CIVATA M6*1*20	BOLT		AR		1		
40	MF453017X	VİDA	SCREW		AR		1		

TEMSA	Yan kapak - Happich kilit Side lid - - Happich lock Seiten deckeln	62102-96810-18Y Vehicle Model: **TB162W** **TB163W**	**28-030.1** RevDate: Page: 2

Pos	Part Number	Turkish	English	German	Qty	R/P	From	Up To	Original Number Supplier
41	62102-97710-01Y	PANEL	PANEL		1		150504		
42	62102-97710-96Y	PANEL	PANEL		1		150504		
43	6020578X	TUTAMAK standart	HANDLE standard	HALTER	1		150504		(BBAG_KILIT_02) HAPPICH
43	6020571X	TUTAMAK merkezi kilit	HANDLE central locking	HALTER	1		150504		(BBAG_KILIT_03) HAPPICH central lock
46	6020601X	KİLİT KOMPLESİ standart	LOCK ASSY standard	SCHLOSS KOMPLEX	1		150504		(BBAG_KILIT_02) HAPPICH
46	6020600X	KİLİT KOMPLESİ merkezi kilit	LOCK ASSY central locking	SCHLOSS KOMPLEX	1		150504		(BBAG_KILIT_03) HAPPICH central lock

TEMSA	Yan kapaklar - standart kilit Side lids - standard lock Seiten deckeln	Group No : 28-031 Draw. Num. : x Rev. Date : Page : 1
	Vehicle Model: TB162W, TB163W,	

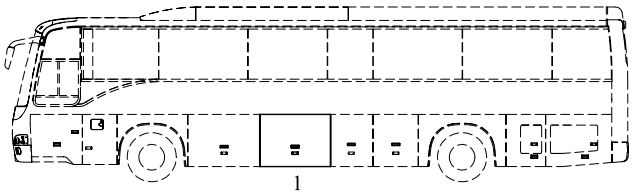

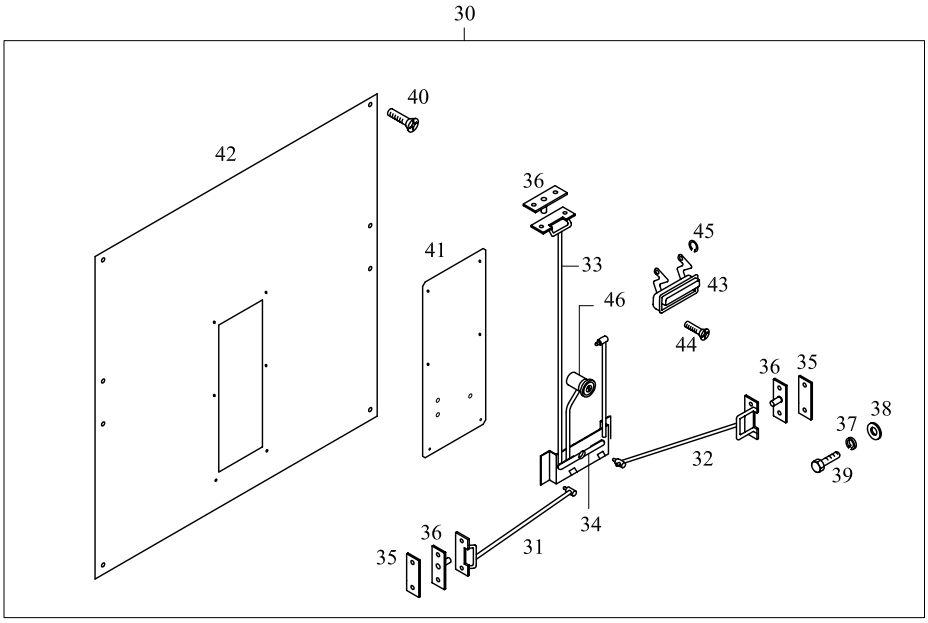

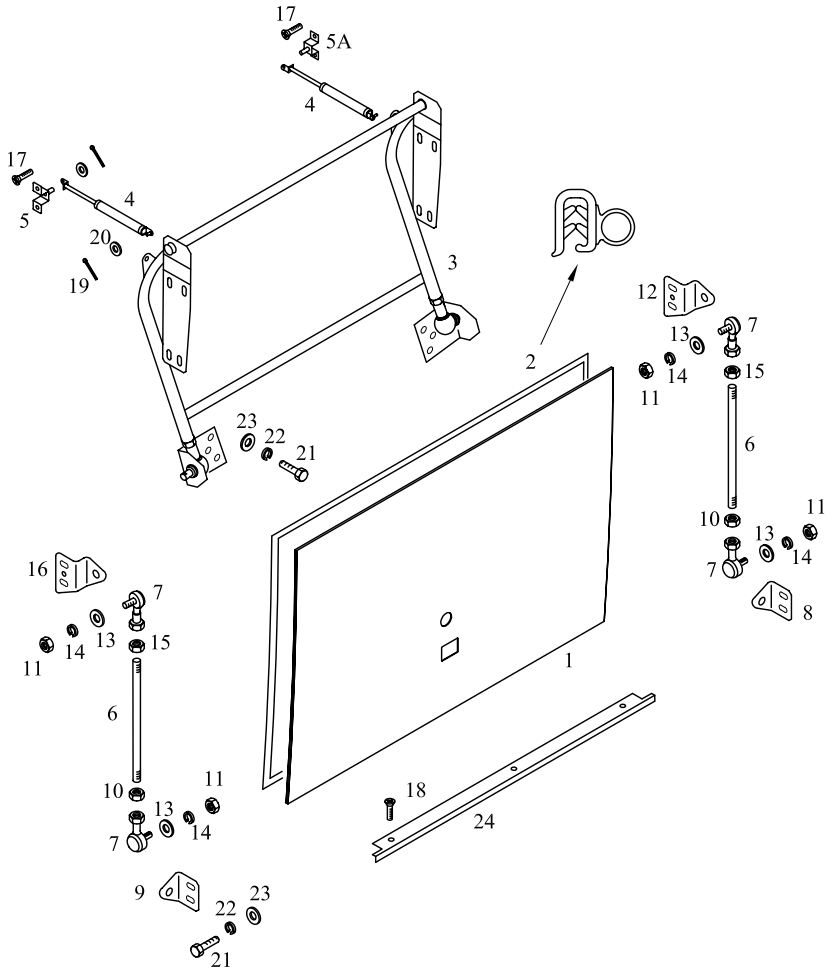

TEMSA	Yan kapak - standart kilit Side lid - standard lock Seiten deckeln	62102-96010-02Y Vehicle Model: **TB162W** **TB163W**	**28-031** RevDate: Page: 1

Pos	Part Number	Turkish	English	German	Qty	R/P	From	Up To	Original Number Supplier
1	62102-96550-70Y	YAN KAPAK	SIDE LID		1		1	150504	
1	62102-96550-70KY	YAN KAPAK	SIDE LID		1		150504		
2	TB112268Y	FİTİL	WEATHER STRIP		mt		1		
3	62102-96160-70Y	BAGAJ KOLU	ARM ASSY HINGE		1		1		
4	62102-70038-06Y	AMORTİSÖR	STAY DAMPER		2		1	150504	
4	62102-70028-01Y	AMORTİSÖR	STAY DAMPER		2		150504		
5	62102-11290-77Y	BRAKET	BRAKET		1		1		
5A	62102-70018-01Y	BRAKET	BRAKET		1		1		
6	62102-91570-00Y	ROD	ROD		2		1		
7	62102-61650-01Y	ROTIL	ROD END		2		1		
8	62102-91110-04Y	BRAKET	BRACKET		2		1		
9	62102-91110-05Y	BRAKET	BRACKET		2		1		
10	MS440031Y	SOMUN	NUT		AR		1		
11	MF430005PY	SOMUN	NUT		AR		1		
12	62102-91110-08Y	BRAKET	BRACKET		2		1		
13	MF450005PY	PUL	WASHER PLAIN		AR		1		
14	MF450405Y	RONDELA	WASHER SPRING		AR		1		
15	MF430006Y	SOMUN	NUT		AR		1		
16	62102-91110-12Y	BRAKET	BRACKET		2		1		
17	MC386109	VİDA	SCREW TAPPING		AR		1		
18	MF453615Y	VİDA	SCREW TAPPING		AR		1		
19	MF472037Y	KOPİLYA	PIN SPLIT		AR		1		
20	MF450154Y	PUL	WASHER PLAIN		AR		1		
21	MF100057Y	CIVATA M8*1.25*25	BOLT		AR		1		
22	MF450405Y	RONDELA	WASHER SPRING		AR		1		
23	MF450154Y	PUL	WASHER PLAIN		AR		1		
24	62102-96900-01Y	ALUMİNYUM ÇITA	PLATE EDGE		4		1	150504	
24	61714-96900-01Y	ALUMİNYUM ÇITA	PLATE EDGE		4		150504		
30	62102-96500-70Y	KİLİT	LOCK ASSY		1		1		
31	62102-97510-86Y	KİLİT TELİ	CONNECTING ROD		1		1		
32	62102-97510-76Y	KİLİT TELİ	CONNECTING ROD		1		1		
33	62102-80510-83Y	KİLİT TELİ	CONNECTING ROD		1		1		
34	62102-80340-70Y	KİLİT MEKANİZMASI	LINK ASSY		1		1		
35	TU150136Y	ARA PARÇA	SHIM		2		1		
36	MC324121Y	TUTUCU	STRIKE ASSY		2		1		

TEMSA	Yan kapak - standart kilit Side lid - standard lock Seiten deckeln	Vehicle Model: **TB162W** **TB163W**	**28-031** RevDate: Page: 2

Pos	Part Number	Turkish	English	German	Qty	R/P	From	Up To	Original Number Supplier
37	MF450404Y	RONDELA	WASHER SPRING		AR		1		
38	MF450004Y	PUL	WASHER PLAIN		AR		1		
39	MF100029Y	CIVATA M6*1*20	BOLT		AR		1		
40	MF453017X	VİDA	SCREW		AR		1		
41	62102-97510-01Y	PANEL	PANEL		1		1		
42	62102-97510-96Y	PANEL	PANEL		1		1		
43	TC323896Y	TUTAMAK	HANDLE		1		1		
44	MF453615PY	VİDA	SCREW		AR		1		
45	MF522401Y	SEGMAN	RING SNAP		AR		1		
46	62102-94200-01X	KİLİT	LOCK ASSY		1		1		

TEMSA	Yan kapaklar - Happich kilit Side lids - Happich lock Seiten deckeln	Group No : 28-031.1 Draw. Num. : x Rev. Date :
	Vehicle Model: TB162W, TB163W,	Page : 1

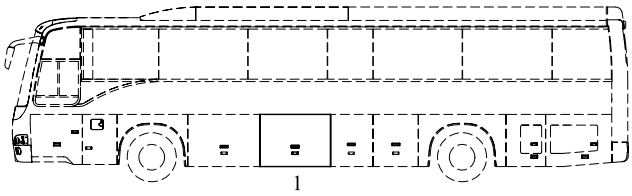

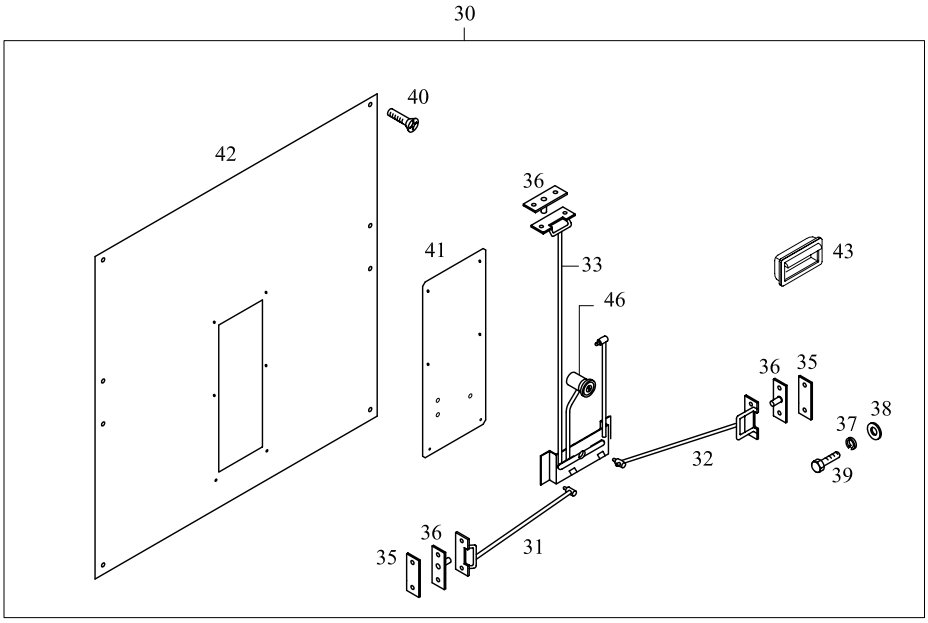

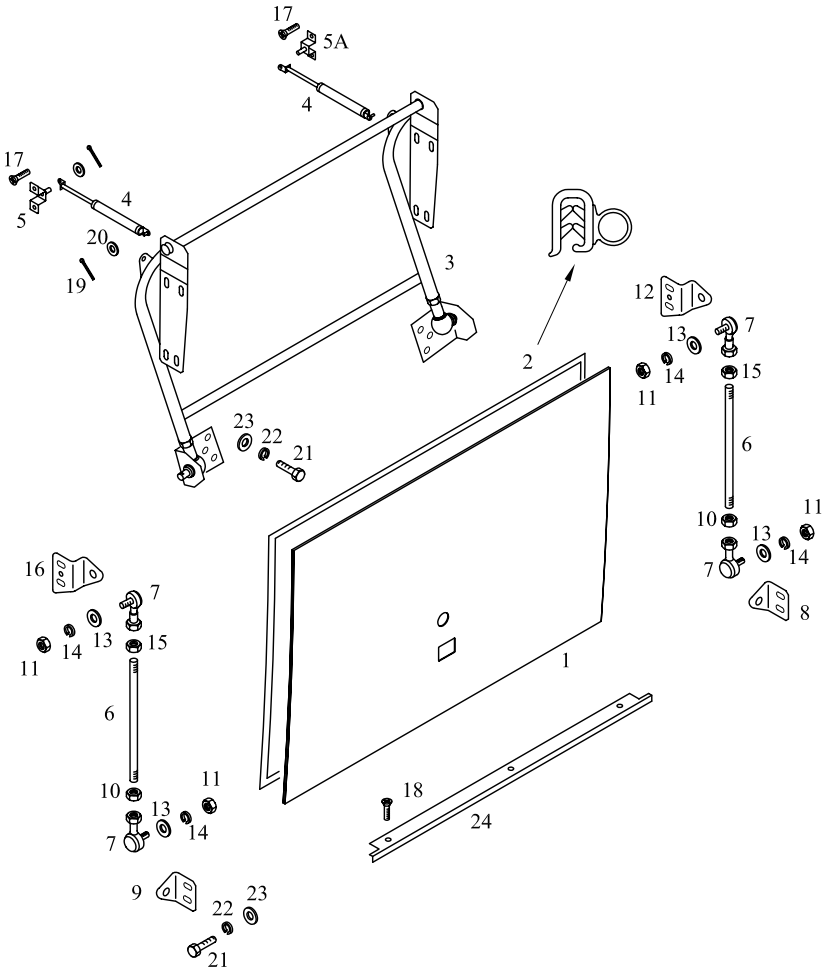

TEMSA	Yan kapak - Happich kilit Side lid - - Happich lock Seiten deckeln	Drw.no 62102-96810-02Y Vehicle Model: **TB162W** **TB163W**	**28-031.1** RevDate: Page: 1

Pos	Part Number	Turkish	English	German	Qty	R/P	From	Up To	Original Number Supplier
1	62102-96750-70KY	YAN KAPAK	SIDE LID		1		150504		
2	TB112268Y	FİTİL	WEATHER STRIP		mt		1		
3	62102-96160-70Y	BAGAJ KOLU	ARM ASSY HINGE		1		1		
4	62102-70038-06Y	AMORTİSÖR	STAY DAMPER		2		1	150504	
4	62102-70028-01Y	AMORTİSÖR	STAY DAMPER		2		150504		
5	62102-11290-77Y	BRAKET	BRAKET		1		1		
5A	62102-70018-01Y	BRAKET	BRAKET		1		1		
6	62102-91570-00Y	ROD	ROD		2		1		
7	62102-61650-01Y	ROTIL	ROD END		2		1		
8	62102-91110-04Y	BRAKET	BRACKET		2		1		
9	62102-91110-05Y	BRAKET	BRACKET		2		1		
10	MS440031Y	SOMUN	NUT		AR		1		
11	MF430005PY	SOMUN	NUT		AR		1		
12	62102-91110-08Y	BRAKET	BRACKET		2		1		
13	MF450005PY	PUL	WASHER PLAIN		AR				
14	MF450405Y	RONDELA	WASHER SPRING		AR		1		
15	MF430006Y	SOMUN	NUT		AR		1		
16	62102-91110-12Y	BRAKET	BRACKET		2		1		
17	MC386109	VİDA	SCREW TAPPING		AR		1		
18	MF453615Y	VİDA	SCREW TAPPING		AR		1		
19	MF472037Y	KOPİLYA	PIN SPLIT		AR		1		
20	MF450154Y	PUL	WASHER PLAIN		AR		1		
21	MF100057Y	CIVATA M8*1.25*25	BOLT		AR		1		
22	MF450405Y	RONDELA	WASHER SPRING		AR		1		
23	MF450154Y	PUL	WASHER PLAIN		AR		1		
24	61714-96900-01Y	ALUMİNYUM ÇITA	PLATE EDGE		1		1		
30	62102-96700-70Y	KİLİT	LOCK ASSY		1		150504		
31	62102-97710-86Y	KİLİT TELİ	CONNECTING ROD		1		150504		
32	62102-97710-76Y	KİLİT TELİ	CONNECTING ROD		1		150504		
33	62102-87510-83Y	KİLİT TELİ	CONNECTING ROD		1		150504		
35	TU150136Y	ARA PARÇA	SHIM		2		1		
36	MC324121Y	TUTUCU	STRIKE ASSY		2		1		
37	MF450404Y	RONDELA	WASHER SPRING		AR		1		
38	MF450004Y	PUL	WASHER PLAIN		AR		1		
39	MF100029Y	CIVATA M6*1*20	BOLT		AR		1		

TEMSA	Yan kapak - Happich kilit Side lid - - Happich lock Seiten deckeln	Drw.no 62102-96010-70/71 Vehicle Model: **TB162W** **TB163W**	**28-031.1** RevDate: Page: 2

Pos	Part Number	Turkish	English	German	Qty	R/P	From	Up To	Original Number Supplier
40	MF453017X	VİDA	SCREW		AR		1		
41	62102-97710-01Y	PANEL	PANEL		1		150504		
42	62102-97710-96Y	PANEL	PANEL		1		150504		
43	6020578X	TUTAMAK standart	HANDLE standard	HALTER	1		150504		(BBAG_KILIT_02) HAPPICH
43	6020571X	TUTAMAK merkezi kilit	HANDLE central locking	HALTER	1		150504		(BBAG_KILIT_03) HAPPICH central lock
46	6020601X	KİLİT KOMPLESİ standart	LOCK ASSY standard	SCHLOSS KOMPLEX	1		150504		(BBAG_KILIT_02) HAPPICH
46	6020600X	KİLİT KOMPLESİ merkezi kilit	LOCK ASSY central locking	SCHLOSS KOMPLEX	1		150504		(BBAG_KILIT_03) HAPPICH central lock

TEMSA	Yan kapaklar - standart kilit Side lids - standard lock Seiten deckeln	Group No : 28-032 Draw. Num. : x Rev. Date : Page : 1
	Vehicle Model: TB162W, TB163W,	

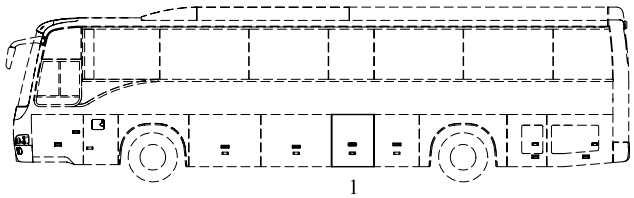

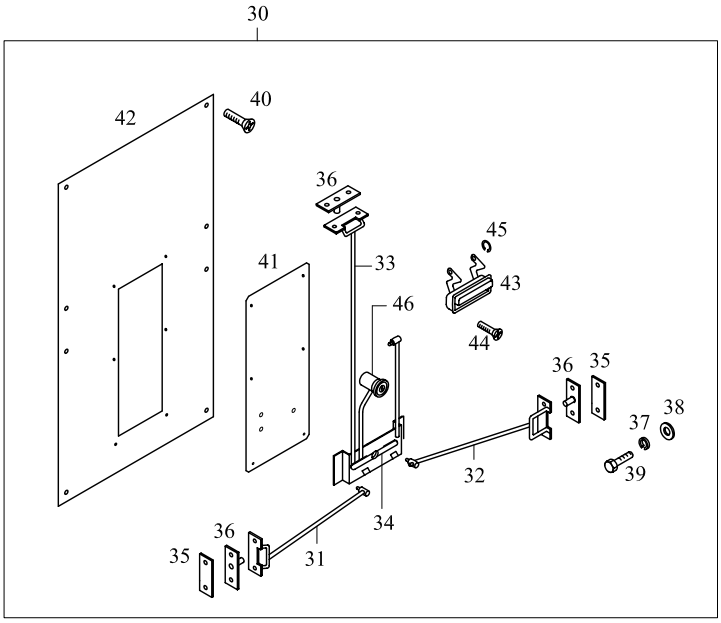

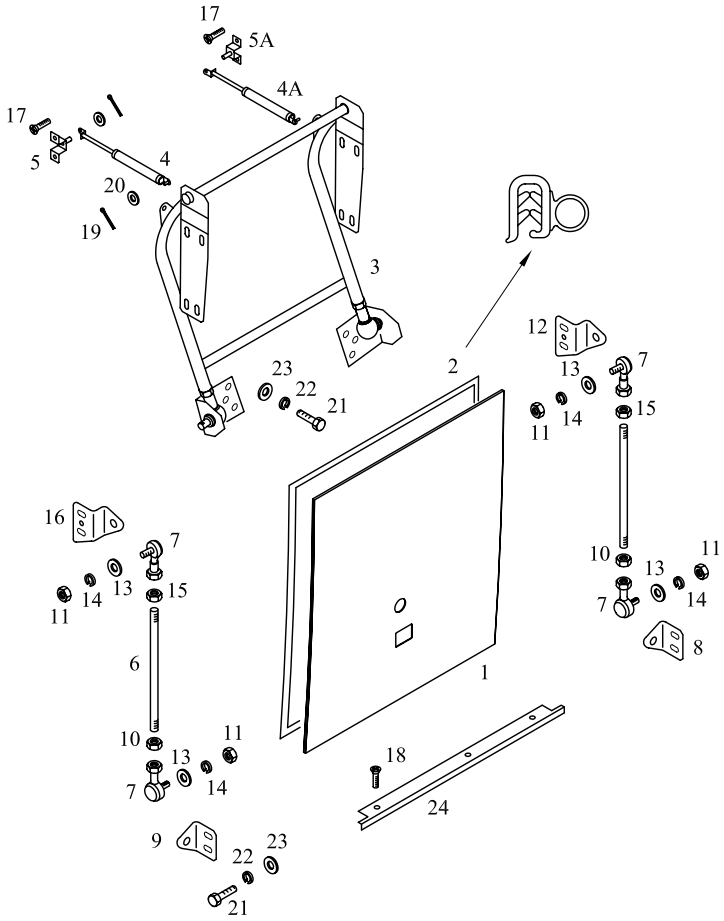

TEMSA	Yan kapak - standart kilit Side lid - standard lock Seiten deckeln	Drw.no 62102-97010-04Y Vehicle Model: **TB162W** **TB163W**	**28-032** RevDate: Page: 1

Pos	Part Number	Turkish	English	German	Qty	R/P	From	Up To	Original Number Supplier
1	62102-97550-72Y	YAN KAPAK	SIDE LID		1		1	150504	
1	62102-97550-72KY	YAN KAPAK	SIDE LID		1		150504		
2	TB112268Y	FİTİL	WEATHER STRIP		MT		1		
3	62102-97160-72Y	BAGAJ KOLU	ARM ASSY HINGE		1		1		
4	62102-70028-02Y	AMORTİSÖR	STAY DAMPER		1		1		
4A	62102-70028-01Y	AMORTİSÖR	STAP DAMPER		1		1		
5	62102-11290-77Y	BRAKET	BRAKET		1		1		
5A	62102-70018-01Y	BRAKET	BRAKET		1		1		
6	62102-91570-00Y	ROD	ROD		2		1		
7	62102-61650-01Y	ROTIL	ROD END		2		1		
8	62102-91110-04Y	BRAKET	BRACKET		1		1		
9	62102-91110-05Y	BRAKET	BRACKET		1		1		
10	MS440031Y	SOMUN	NUT		AR		1		
11	MF430005PY	SOMUN	NUT		AR		1		
12	62102-91110-08Y	BRAKET	BRACKET		2		1		
13	MF450005PY	PUL	WASHER PLAIN		AR				
14	MF450405Y	RONDELA	WASHER SPRING		AR		1		
15	MF430006Y	SOMUN	NUT		AR		1		
16	62102-91110-12Y	BRAKET	BRACKET		2		1		
17	MC386109	VİDA	SCREW TAPPING		AR		1		
18	MF453615Y	VİDA	SCREW TAPPING		AR		1		
19	MF472037Y	KOPİLYA	PIN SPLIT		AR		1		
20	MF450154Y	PUL	WASHER PLAIN		AR		1		
21	MF100057Y	CIVATA M8*1.25*25	BOLT		AR		1		
22	MF450405Y	RONDELA	WASHER SPRING		AR		1		
23	MF450154Y	PUL	WASHER PLAIN		AR		1		
24	62102-81220-09Y	ALUMİNYUM ÇITA	PLATE EDGE		1		1		
30	62102-97500-72Y	KİLİT	LOCK ASSY		1		1		
31	62102-97510-82Y	KİLİT TELİ	CONNECTING ROD		1		1		
32	62102-97510-72Y	KİLİT TELİ	CONNECTING ROD		1		1		
33	62102-80510-83Y	KİLİT TELİ	CONNECTING ROD		4		1		
34	62102-80340-70Y	KİLİT MEKANİZMASI	LINK ASSY		1		1		
35	TU150136Y	ARA PARÇA	SHIM		2		1		
36	MC324121Y	TUTUCU	STRIKE ASSY		AR		1		
37	MF450404Y	RONDELA	WASHER SPRING		AR		1		

TEMSA	Yan kapak - standart kilit Side lid - standard lock Seiten deckeln	Drw.no 62102-97010-04Y Vehicle Model: **TB162W** **TB163W**	**28-032** RevDate: Page: 2

Pos	Part Number	Turkish	English	German	Qty	R/P	From	Up To	Original Number Supplier
38	MF450004Y	PUL	WASHER PLAIN		AR		1		
39	MF100029Y	CIVATA M6*1*20	BOLT		AR		1		
40	MF453017X	VİDA	SCREW		AR		1		
41	62102-97510-01Y	PANEL	PANEL		1		1		
42	62102-97510-92Y	PANEL	PANEL		1		1		
43	TC323896Y	TUTAMAK	HANDLE		AR		1		
44	MF453615PY	VİDA	SCREW		AR		1		
45	MF522401Y	SEGMAN	RING SNAP		AR		1		
46	62102-94200-01X	KİLİT	LOCK ASSY		AR		1		

TEMSA	Yan kapaklar - Happich kilit Side lids - Happich lock Seiten deckeln	Group No : 28-032.1 Draw. Num. : x Rev. Date : Page : 1
	Vehicle Model: TB162W, TB163W,	

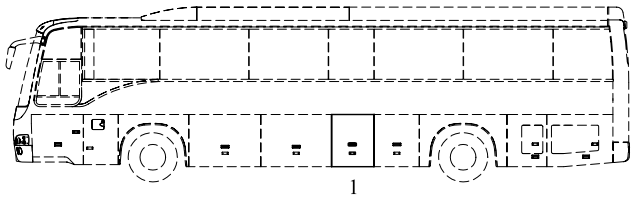

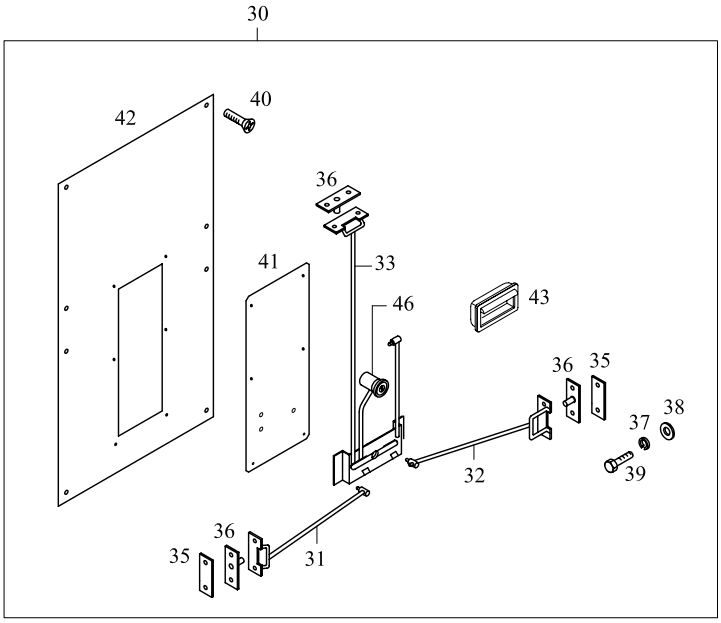

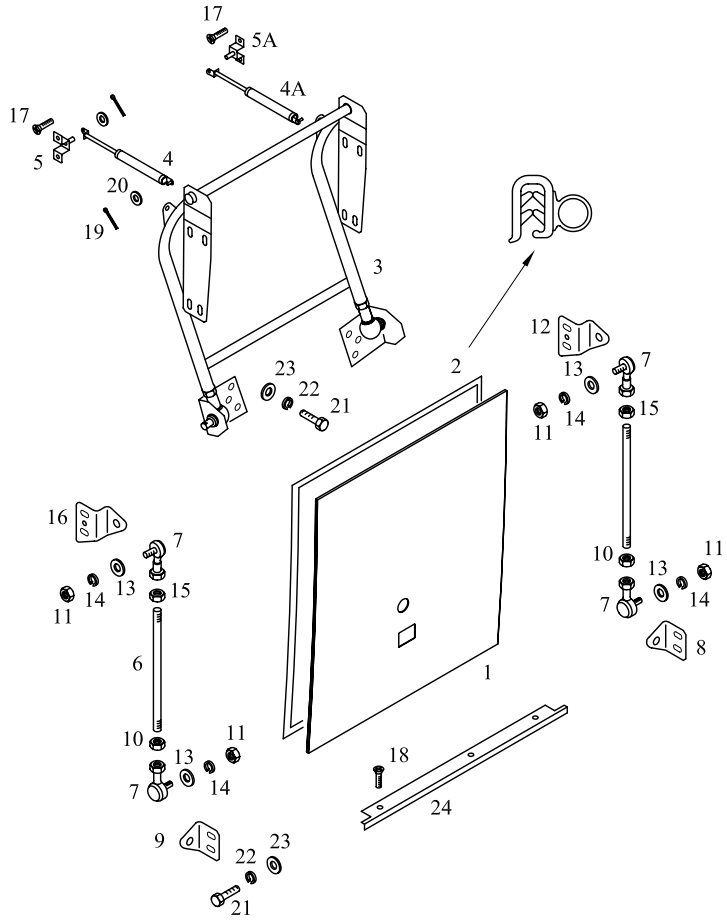

TEMSA	Yan kapak - Happich kilit Side lid - - Happich lock Seiten deckeln	Drw.no 62102-97810-04Y Vehicle Model: **TB162W** **TB163W**	**28-032.1** RevDate: Page: 1

Pos	Part Number	Turkish	English	German	Qty	R/P	From	Up To	Original Number Supplier
1	62102-97750-72KY	YAN KAPAK	SIDE LID		1		150504		
2	TB112268Y	FİTİL	WEATHER STRIP		AR		1		
3	62102-97160-72Y	BAGAJ KOLU	ARM ASSY HINGE		1		1		
4	62102-70028-02Y	AMORTİSÖR	STAY DAMPER		1		1		
4A	62102-70028-01Y	AMORTİSÖR	STAP DAMPER		1		1		
5	62102-11290-77Y	BRAKET	BRAKET		1		1		
5A	62102-70018-01Y	BRAKET	BRAKET		1		1		
6	62102-91570-00Y	ROD	ROD		2		1		
7	62102-61650-01Y	ROTIL	ROD END		2		1		
8	62102-91110-04Y	BRAKET	BRACKET		2		1		
9	62102-91110-05Y	BRAKET	BRACKET		2		1		
10	MS440031Y	SOMUN	NUT		AR		1		
11	MF430005PY	SOMUN	NUT		AR		1		
12	62102-91110-08Y	BRAKET	BRACKET		2		1		
13	MF450005PY	PUL	WASHER PLAIN		AR		1		
14	MF450405Y	RONDELA	WASHER SPRING		AR		1		
15	MF430006Y	SOMUN	NUT		AR		1		
16	62102-91110-12Y	BRAKET	BRACKET		1		1		
17	MC386109	VİDA	SCREW TAPPING		AR		1		
18	MF453615Y	VİDA	SCREW TAPPING		AR		1		
19	MF472037Y	KOPİLYA	PIN SPLIT		AR		1		
20	MF450154Y	PUL	WASHER PLAIN		AR		1		
21	MF100057Y	CIVATA M8*1.25*25	BOLT		AR		1		
22	MF450405Y	RONDELA	WASHER SPRING		AR		1		
23	MF450154Y	PUL	WASHER PLAIN		AR		1		
24	62102-81220-09Y	ALUMİNYUM ÇITA	PLATE EDGE		1		1		
30	62102-97700-72Y	KİLİT	LOCK ASSY		1		150504		
31	62102-97710-82Y	KİLİT TELİ	CONNECTING ROD		1		150504		
32	62102-97710-72Y	KİLİT TELİ	CONNECTING ROD		1		150504		
33	62102-87510-83Y	KİLİT TELİ	CONNECTING ROD		1		150504		
35	TU150136Y	ARA PARÇA	SHIM		2		1		
36	MC324121Y	TUTUCU	STRIKE ASSY		AR		1		
37	MF450404Y	RONDELA	WASHER SPRING		AR		1		
38	MF450004Y	PUL	WASHER PLAIN		AR		1		
39	MF100029Y	CIVATA M6*1*20	BOLT		AR		1		

TEMSA	Yan kapak - Happich kilit Side lid - - Happich lock Seiten deckeln	Drw.no 62102-97810-04Y Vehicle Model: **TB162W** **TB163W**	**28-032.1** RevDate: Page: 2

Pos	Part Number	Turkish	English	German	Qty	R/P	From	Up To	Original Number Supplier
40	MF453017X	VİDA	SCREW		AR		1		
41	62102-97710-01Y	PANEL	PANEL		1		150504		
42	62102-97710-92Y	PANEL	PANEL		1		150504		
43	6020578X	TUTAMAK standart	HANDLE standard	HALTER	1		150504		(BBAG_KILIT_02) HAPPICH
43	6020571X	TUTAMAK merkezi kilit	HANDLE central locking	HALTER	1		150504		(BBAG_KILIT_03) HAPPICH central lock
46	6020601X	KİLİT KOMPLESİ standart	LOCK ASSY standard	SCHLOSS KOMPLEX	1		150504		(BBAG_KILIT_02) HAPPICH
46	6020600X	KİLİT KOMPLESİ merkezi kilit	LOCK ASSY central locking	SCHLOSS KOMPLEX	1		150504		(BBAG_KILIT_03) HAPPICH central lock

TEMSA	Yan kapaklar - standart kilit Side lids - standard lock Seiten deckeln	Group No : 28-033 Draw. Num. : x Rev. Date : Page : 1
	Vehicle Model: TB162W, TB163W,	

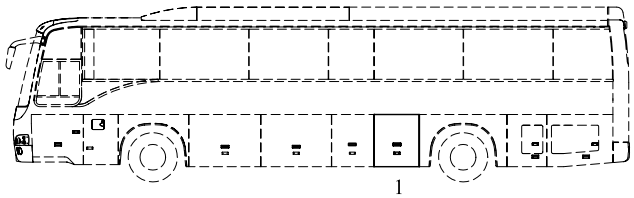

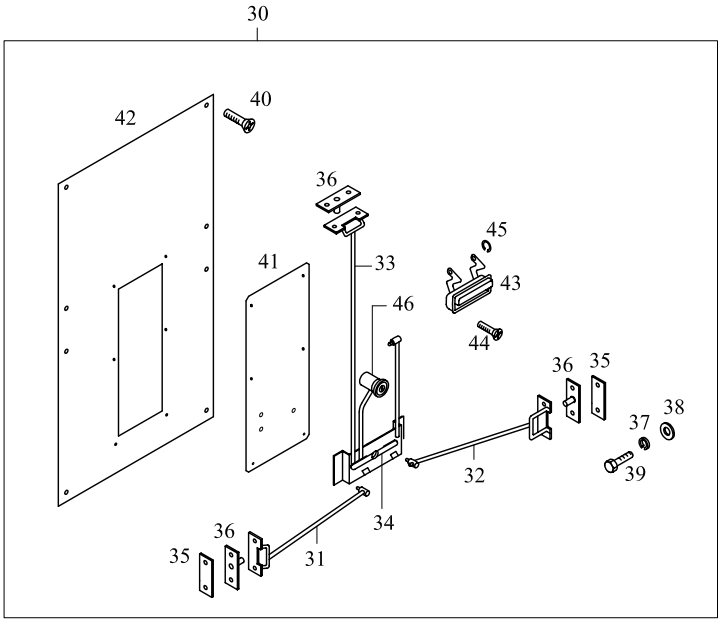

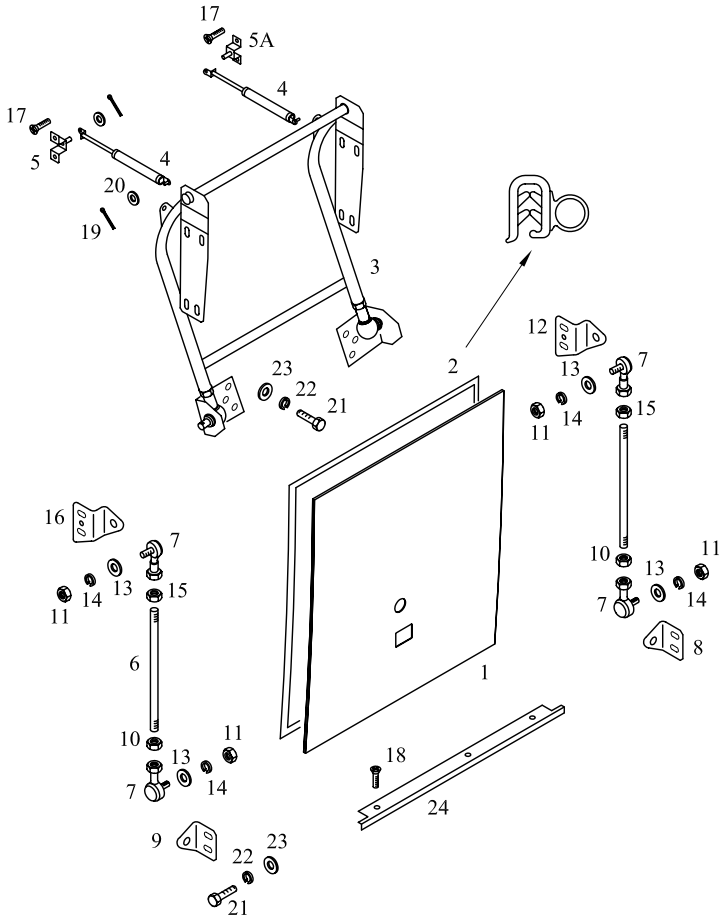

TEMSA	Yan kapak - standart kilit Side lid - standard lock Seiten deckeln	Drw.no 62102-97010-05Y Vehicle Model: **TB162W** **TB163W**	**28-033** RevDate: Page: 1

Pos	Part Number	Turkish	English	German	Qty	R/P	From	Up To	Original Number Supplier
1	62102-97550-73Y	YAN KAPAK	SIDE LID		1		1	150504	
1	62102-97550-73KY	YAN KAPAK	SIDE LID		1		150504		
2	TB112268Y	FİTİL	WEATHER STRIP		AR		1		
3	62102-97160-73Y	BAGAJ KOLU	ARM ASSY HINGE		1		1		
4	62102-70028-02Y	AMORTİSÖR	STAY DAMPER		2		1		
5	62102-11290-77Y	BRAKET	BRAKET		1		1		
5A	62102-70018-01Y	BRAKET	BRAKET		1		1		
6	62102-91570-00Y	ROD	ROD		2		1		
7	62102-61650-01Y	ROTIL	ROD END		2		1		
8	62102-91110-04Y	BRAKET	BRACKET		2		1		
9	62102-91110-05Y	BRAKET	BRACKET		2		1		
10	MS440031Y	SOMUN	NUT		AR		1		
11	MF430005PY	SOMUN	NUT		AR		1		
12	62102-91110-08Y	BRAKET	BRACKET		2		1		
13	MF450005PY	PUL	WASHER PLAIN		AR		1		
14	MF450405Y	RONDELA	WASHER SPRING		AR		1		
15	MF430006Y	SOMUN	NUT		AR		1		
16	62102-91110-12Y	BRAKET	BRACKET		2		1		
17	MC386109	VİDA	SCREW TAPPING		AR		1		
18	MF453615Y	VİDA	SCREW TAPPING		AR		1		
19	MF472037Y	KOPİLYA	PIN SPLIT		AR		1		
20	MF450154Y	PUL	WASHER PLAIN		AR		1		
21	MF100057Y	CIVATA M8*1.25*25	BOLT		AR		1		
22	MF450405Y	RONDELA	WASHER SPRING		AR		1		
23	MF450154Y	PUL	WASHER PLAIN		AR		1		
24	62102-96900-04Y	ALUMİNYUM ÇITA	PLATE EDGE		1		1	150504	
24	61714-96900-04Y	ALUMİNYUM ÇITA	PLATE EDGE		1		150504		
30	62102-97500-73Y	KİLİT	LOCK ASSY		1		1		
31	62102-97510-83Y	KİLİT TELİ	CONNECTING ROD		1		1		
32	62102-97510-73Y	KİLİT TELİ	CONNECTING ROD		1		1		
33	62102-80510-83Y	KİLİT TELİ	CONNECTING ROD		1		1		
34	62102-80340-70Y	KİLİT MEKANİZMASI	LINK ASSY		1		1		
35	TU150136Y	ARA PARÇA	SHIM		AR		1		
36	MC324121Y	TUTUCU	STRIKE ASSY		AR		1		
37	MF450404Y	RONDELA	WASHER SPRING		AR		1		

TEMSA	Yan kapak - standart kilit Side lid - standard lock Seiten deckeln	Drw.no 62102-97010-05Y Vehicle Model: **TB162W** **TB163W**	**28-033** RevDate: Page: 2

Pos	Part Number	Turkish	English	German	Qty	R/P	From	Up To	Original Number Supplier
38	MF450004Y	PUL	WASHER PLAIN		AR		1		
39	MF100029Y	CIVATA M6*1*20	BOLT		AR		1		
40	MF453017X	VİDA	SCREW		AR		1		
41	62102-97510-01Y	PANEL	PANEL		1		1		
42	62102-97510-93Y	PANEL	PANEL		1		1		
43	TC323896Y	TUTAMAK	HANDLE		AR		1		
44	MF453615PY	VİDA	SCREW		AR		1		
45	MF522401Y	SEGMAN	RING SNAP		AR		1		
46	62102-94200-01X	KİLİT	LOCK ASSY		AR		1		

TEMSA	Yan kapaklar - Happich kilit Side lids - Happich lock Seiten deckeln	Group No : 28-033.1 Draw. Num. : x Rev. Date : Page : 1
	Vehicle Model: TB162W, TB163W,	

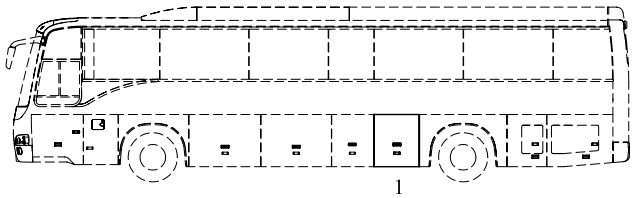

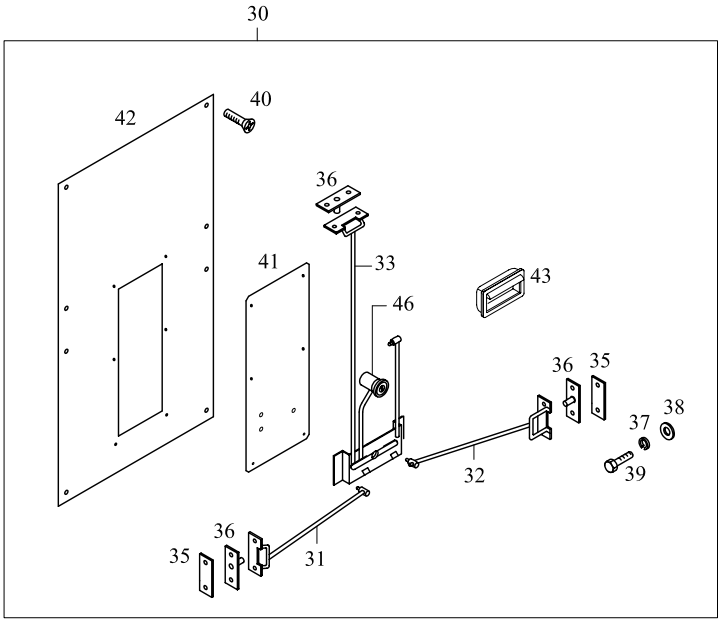

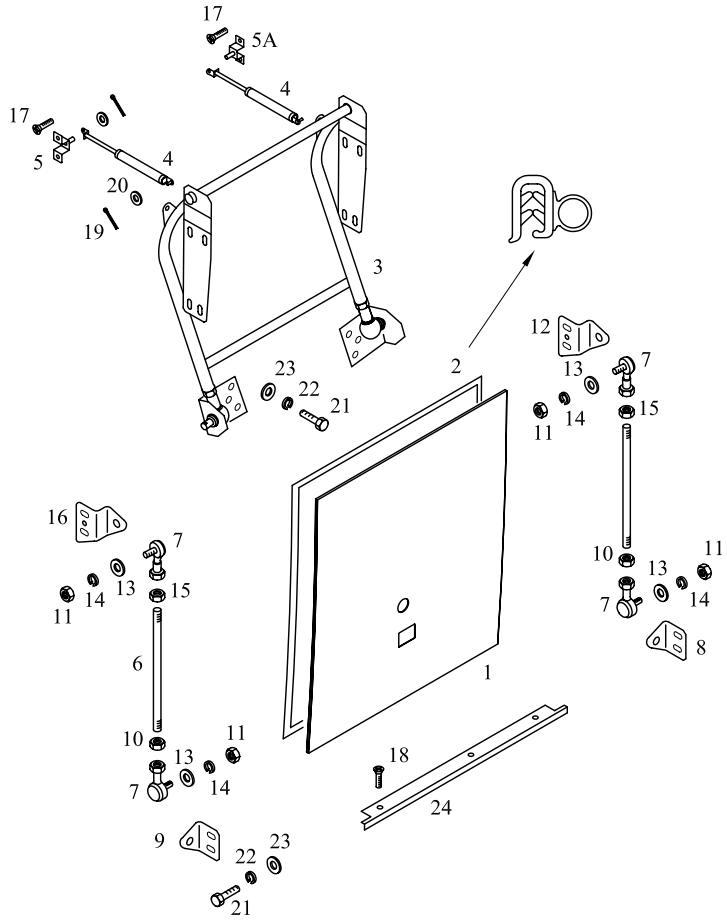

TEMSA	Yan kapak - Happich kilit Side lid - - Happich lock Seiten deckeln	Drw.no 62102-97810-05Y Vehicle Model: **TB162W** **TB163W**	**28-033.1** RevDate: Page: 1

Pos	Part Number	Turkish	English	German	Qty	R/P	From	Up To	Original Number Supplier
1	62102-97750-73KY	YAN KAPAK	SIDE LID		1		150504		
2	TB112268Y	FİTİL	WEATHER STRIP		AR		1		
3	62102-97160-73Y	BAGAJ KOLU	ARM ASSY HINGE		1		1		
4	62102-70028-02Y	AMORTİSÖR	STAY DAMPER		2		1		
5	62102-11290-77Y	BRAKET	BRAKET		1		1		
5A	62102-70018-01Y	BRAKET	BRAKET		1		1		
6	62102-91570-00Y	ROD	ROD		2		1		
7	62102-61650-01Y	ROTIL	ROD END		2		1		
8	62102-91110-04Y	BRAKET	BRACKET		2		1		
9	62102-91110-05Y	BRAKET	BRACKET		2		1		
10	MS440031Y	SOMUN	NUT		AR		1		
11	MF430005PY	SOMUN	NUT		AR		1		
12	62102-91110-08Y	BRAKET	BRACKET		2		1		
13	MF450005PY	PUL	WASHER PLAIN		AR		1		
14	MF450405Y	RONDELA	WASHER SPRING		AR		1		
15	MF430006Y	SOMUN	NUT		AR		1		
16	62102-91110-12Y	BRAKET	BRACKET		2		1		
17	MC386109	VİDA	SCREW TAPPING		AR		1		
18	MF453615Y	VİDA	SCREW TAPPING		AR		1		
19	MF472037Y	KOPİLYA	PIN SPLIT		AR		1		
20	MF450154Y	PUL	WASHER PLAIN		AR		1		
21	MF100057Y	CIVATA M8*1.25*25	BOLT		AR		1		
22	MF450405Y	RONDELA	WASHER SPRING		AR		1		
23	MF450154Y	PUL	WASHER PLAIN		AR		1		
24	61714-96900-04Y	ALUMİNYUM ÇITA	PLATE EDGE		1		1		
30	62102-97700-73Y	KİLİT	LOCK ASSY		1		150504		
31	62102-97710-83Y	KİLİT TELİ	CONNECTING ROD		1		150504		
32	62102-97710-73Y	KİLİT TELİ	CONNECTING ROD		1		150504		
33	62102-87510-83Y	KİLİT TELİ	CONNECTING ROD		1		150504		
35	TU150136Y	ARA PARÇA	SHIM		AR		1		
36	MC324121Y	TUTUCU	STRIKE ASSY		AR		1		
37	MF450404Y	RONDELA	WASHER SPRING		AR		1		
38	MF450004Y	PUL	WASHER PLAIN		AR		1		
39	MF100029Y	CIVATA M6*1*20	BOLT		AR		1		
40	MF453017Y	VİDA	SCREW		AR		1		

TEMSA	Yan kapak - Happich kilit Side lid - - Happich lock Seiten deckeln	Drw.no 62102-97810-05Y Vehicle Model: **TB162W** **TB163W**	**28-033.1** RevDate: Page: 2

Pos	Part Number	Turkish	English	German	Qty	R/P	From	Up To	Original Number Supplier
41	62102-97710-01Y	PANEL	PANEL		1		150504		
42	62102-97710-93Y	PANEL	PANEL		1		150504		
43	6020578X	TUTAMAK standart	HANDLE standard	HALTER	1		150504		(BBAG_KILIT_02) HAPPICH
43	6020571X	TUTAMAK merkezi kilit	HANDLE central locking	HALTER	1		150504		(BBAG_KILIT_03) HAPPICH central lock
46	6020601X	KİLİT KOMPLESİ standart	LOCK ASSY standard	SCHLOSS KOMPLEX	1		150504		(BBAG_KILIT_02) HAPPICH
46	6020600X	KİLİT KOMPLESİ merkezi kilit	LOCK ASSY central locking	SCHLOSS KOMPLEX	1		150504		(BBAG_KILIT_03) HAPPICH central lock

TEMSA	Yan kapaklar - standart kilit Side lids - standard lock Seiten deckeln	Group No : 28-034 Draw. Num. : x Rev. Date : Page : 1
	Vehicle Model: TB162W, TB162Z, TB163W, TB163Z,	

TB162W
TB163W

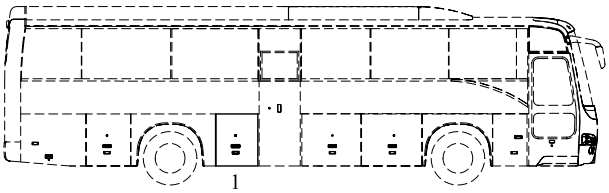

Uyku kabinsiz
Without sleeping cabin

TB162Z
TB163Z

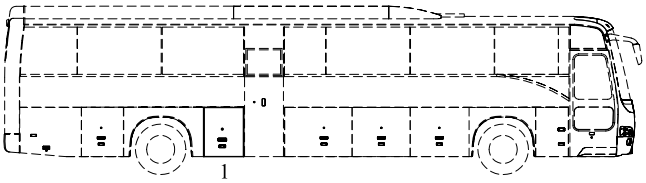

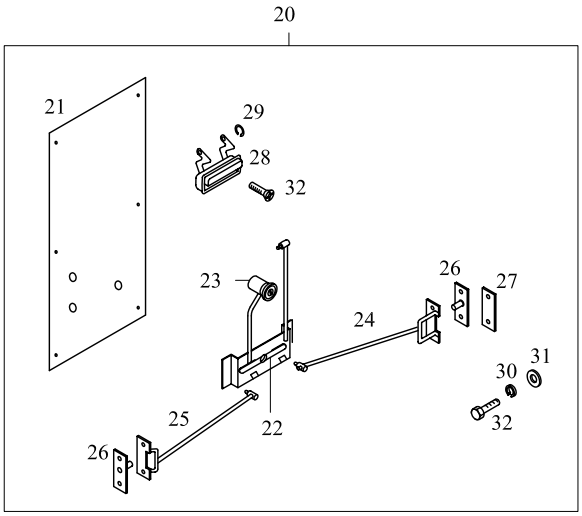

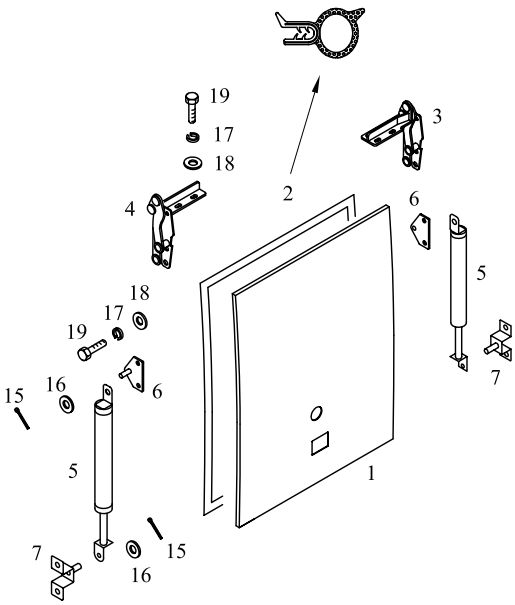

TEMSA	Yan kapak - standart kilit Side lid - standard lock Seiten deckeln	Drw.no 62102-97010-16Y Vehicle Model: **TB162W, TB162Z** **TB163W, TB163Z**	**28-034** RevDate: Page: 1

Pos	Part Number	Turkish	English	German	Qty	R/P	From	Up To	Original Number Supplier
1	62102-97550-77AY	YAN KAPAK	SIDE LID		1		1	15.05.04	
1	62102-97550-77AKY	YAN KAPAK	SIDE LID		1		15.05.04	01.02.05	
1	62102-97550-80Y	YAN KAPAK	SIDE LID		1		01.02.05		
2	62102-97550-22Y	FİTİL	WEATHER STRIP		1		1		
3	TC257622Y	MENTEŞE	HINGE ASSY		AR		1		
4	TC257623Y	MENTEŞE	HINGE ASSY		AR		1		
5	62102-70038-08Y	AMORTİSÖR	STAY DAMPER		4		1		
6	62102-94101-00Y	BRAKET	BRACKET		4		1		
7	MC211379Y	BRAKET	BRACKET		4		1		
15	MF472037Y	KOPİLYA	PIN SPLIT		AR		1		2*18
16	MF450005Y	PUL	WASHER PLAIN		AR		1		A8.5
17	MF450404Y	RONDELA	WASHER SPRING		AR		1		A6
18	MF450004Y	PUL	WASHER PLAIN		AR		1		A6.4
19	MF200079Y	CIVATA	SCREW MACHINE		AR		1		6*20
20	62102-97550-32Y	BAGAJ KİLİDİ KOMPLE	LOCK ASSY		1		1		
21	62102-80510-75Y	PANEL	PANEL		1		1		
22	62102-80340-70Y	KİLİT MEKANİZMASI	LINK ASSY		2		1		
23	62102-94200-01X	KİLİT	LOCK		2		1		
24	62102-97550-03Y	KİLİT TELİ	CONNECTING ROD		1		1		
25	62102-97550-06Y	KİLİT TELİ	CONNECTING ROD		1		1		
26	MC324121Y	TUTUCU	STRIKE ASSY		AR		1		
27	TU150136Y	ARA PARÇA	SHIM		AR		1		
28	TC323896Y	TUTAMAK	HANDLE		AR		1		
29	MF522401Y	SEGMAN	RING SNAP		AR		1		
30	MF450404Y	RONDELA	WASHER SPRING		AR		1		
31	MF450004Y	PUL	WASHER PLAIN		AR		1		
32	MF200079Y	CIVATA M6*1*20	BOLT		AR		1		

TEMSA	Yan kapaklar - Happich kilit Side lids - Happich lock Seiten deckeln	Group No : 28-034.1 Draw. Num. : x Rev. Date : Page : 1
	Vehicle Model: TB162W, TB162Z, TB163W, TB163Z,	

TB162W
TB163W

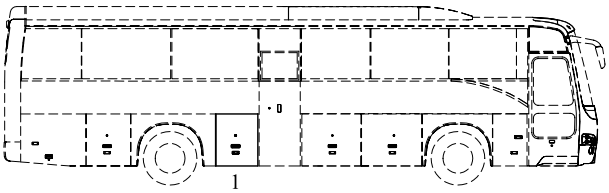

Uyku kabinsiz
Without sleeping cabin

TB162Z
TB163Z

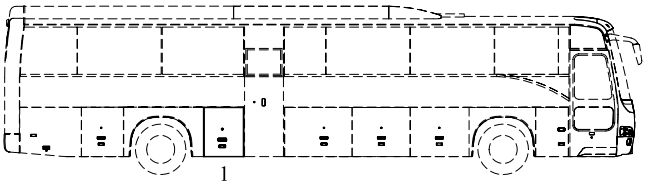

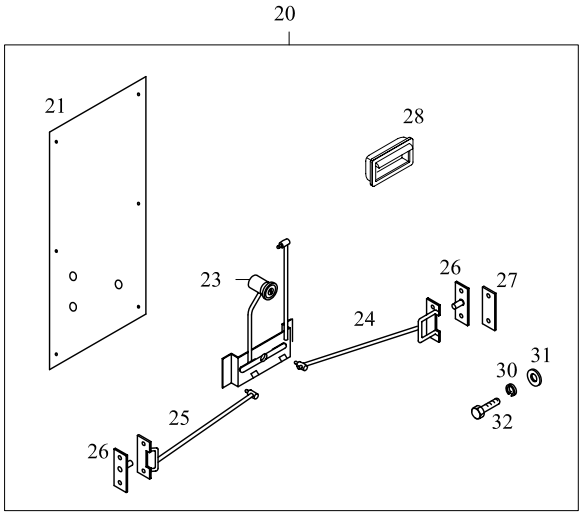

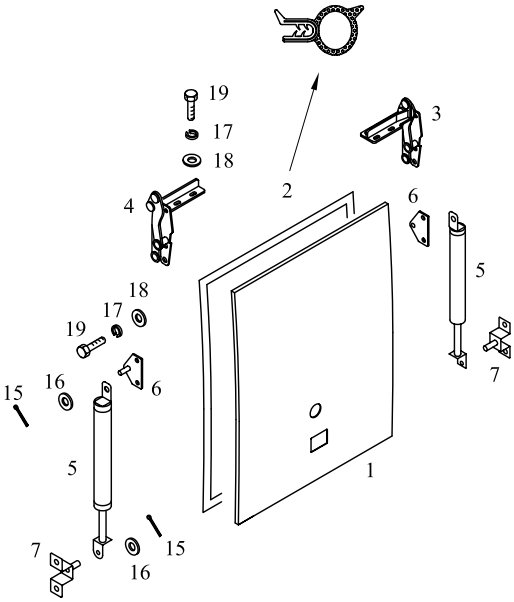

TEMSA	Yan kapak - Happich kilit Side lid - Happich lock Seiten deckeln	Drw.no 62102-96810-27Y Vehicle Model: **TB162W, TB162Z** **TB163W, TB163Z**	**28-034.1** RevDate: Page: 1

Pos	Part Number	Turkish	English	German	Qty	R/P	From	Up To	Original Number Supplier
1	62102-96750-79Y	YAN KAPAK	SIDE LID		1		010205		
2	62102-97550-22Y	FİTİL	WEATHER STRIP		1		1		
3	TC257622Y	MENTEŞE	HINGE ASSY		AR		1		
4	TC257623Y	MENTEŞE	HINGE ASSY		AR		1		
5	62102-70038-08Y	AMORTİSÖR	STAY DAMPER		4		1		
6	62102-94101-00Y	BRAKET	BRACKET		4		1		
7	MC211379Y	BRAKET	BRACKET		4		1		
15	MF472037Y	KOPİLYA	PIN SPLIT		AR		1		2*18
16	MF450005Y	PUL	WASHER PLAIN		AR		1		A8.5
17	MF450404Y	RONDELA	WASHER SPRING		AR		1		A6
18	MF450004Y	PUL	WASHER PLAIN		AR		1		A6.4
19	MF200079Y	CIVATA	SCREW MACHINE		AR		1		6*20
20	62102-97700-78Y	BAGAJ KİLİDİ KOMPLE	LOCK ASSY		1		1		
21	62102-96710-90Y	PANEL	PANEL		1		150504		??
21	62102-97710-07Y	PANEL	PANEL		1		150504		??
23	6020601X	KİLİT KOMPLESİ standart	LOCK ASSY standard	SCHLOSS KOMPLEX	1		150504		(BBAG_KILIT_02) HAPPICH
23	6020600X	KİLİT KOMPLESİ merkezi kilit	LOCK ASSY central locking	SCHLOSS KOMPLEX	1		150504		(BBAG_KILIT_03) HAPPICH central lock
24	62102-97710-75Y	KİLİT TELİ	CONNECTING ROD		1		150504		
25	62102-97710-83Y	KİLİT TELİ	CONNECTING ROD		1		150504		
26	MC324121Y	TUTUCU	STRIKE ASSY		2		1		
27	TU150136Y	ARA PARÇA	SHIM		2		1		
28	6020578X	TUTAMAK standart	HANDLE standard	HALTER	1		150504		(BBAG_KILIT_02) HAPPICH
28	6020571X	TUTAMAK merkezi kilit	HANDLE central locking	HALTER	1		150504		(BBAG_KILIT_03) HAPPICH central lock
30	MF450404Y	RONDELA	WASHER SPRING		AR		1		
31	MF450004Y	PUL	WASHER PLAIN		AR		1		

TEMSA	Yan kapaklar - standart kilit Side lids - standard lock Seiten deckeln	Group No : 28-035 Draw. Num. : x Rev. Date : Page : 1
	Vehicle Model: TB162W, TB162Z, TB163W, TB163Z,	

TB162W
TB163W

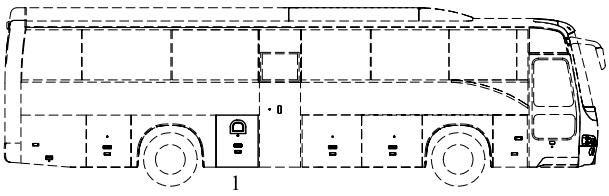

Uyku kabinli
with sleeping cabin

TB162Z
TB163Z

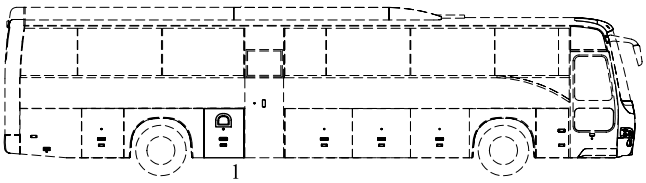

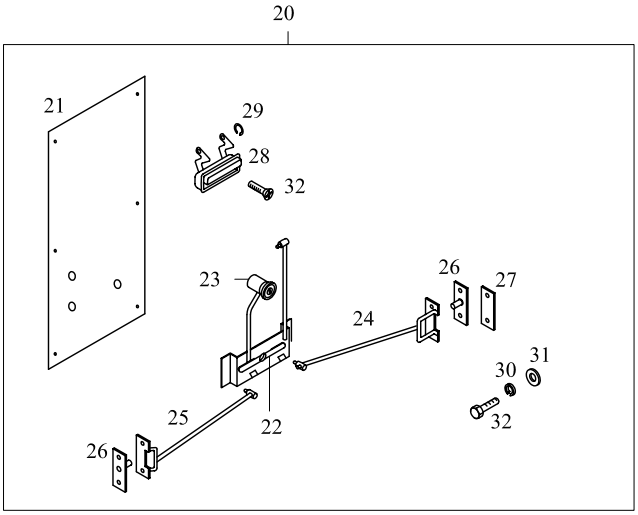

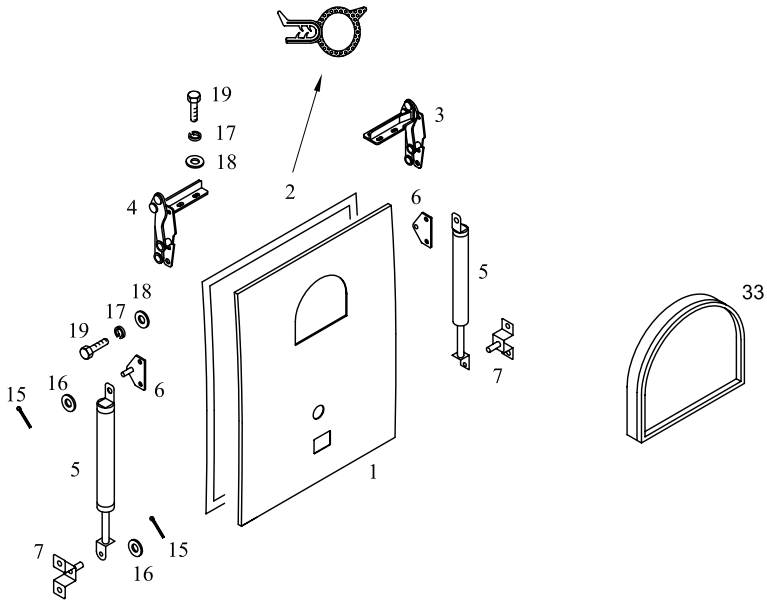

TEMSA	Yan kapak - standart kilit Side lid - standard lock Seiten deckeln	Drw.no 62102-97010-27Y Vehicle Model: **TB162W, TB162Z** **TB163W, TB163Z**	**28-035** RevDate: Page: 1

Pos	Part Number	Turkish	English	German	Qty	R/P	From	Up To	Original Number Supplier
1	62102-97550-79Y	YAN KAPAK	SIDE LID		1		010405		
2	62102-97550-23Y	FİTİL	WEATHER STRIP		1		1		
3	TC257622Y	MENTEŞE	HINGE ASSY		AR		1		
4	TC257623Y	MENTEŞE	HINGE ASSY		AR		1		
5	62102-70038-02Y	AMORTİSÖR	STAY DAMPER		2		1		
6	62102-94101-00Y	BRAKET	BRACKET		4		1		
7	MC211379Y	BRAKET	BRACKET		4		1		
15	MF472037Y	KOPİLYA	PIN SPLIT		AR		1		2*18
16	MF450005Y	PUL	WASHER PLAIN		AR		1		A8.5
17	MF450404Y	RONDELA	WASHER SPRING		AR		1		A6
18	MF450004Y	PUL	WASHER PLAIN		AR		1		A6.4
19	MF200079Y	CIVATA	SCREW MACHINE		AR		1		6*20
20	62102-97550-30Y	BAGAJ KİLİDİ KOMPLE	LOCK ASSY		1		1		
21	62102-80510-75Y	PANEL	PANEL		1		1		
22	62102-80340-71Y	KİLİT MEKANİZMASI	LINK ASSY		1		1		
23	62102-94200-01X	KİLİT	LOCK		2		1		
24	62102-97550-01Y	KİLİT TELİ	CONNECTING ROD		1		1		
25	62102-97550-04Y	KİLİT TELİ	CONNECTING ROD		1		1		
26	MC324121Y	TUTUCU	STRIKE ASSY		AR		1		
27	TU150136Y	ARA PARÇA	SHIM		AR		1		
28	TC323896Y	TUTAMAK	HANDLE		AR		1		
29	MF522401Y	SEGMAN	RING SNAP		AR		1		
30	MF450404Y	RONDELA	WASHER SPRING		AR		1		
31	MF450004Y	PUL	WASHER PLAIN		AR		1		
32	MF200079Y	CIVATA M6*1*20	BOLT		AR		1		
33	MK257243Y	UYKU KABİNİ PENCERESİ	WDO ASSY		1		1		

TEMSA	Yan kapaklar - Happich kilit Side lids - Happich lock Seiten deckeln	Group No : 28-035.1 Draw. Num. : x Rev. Date : Page : 1
	Vehicle Model: TB162W, TB162Z, TB163W, TB163Z,	

TB162W
TB163W

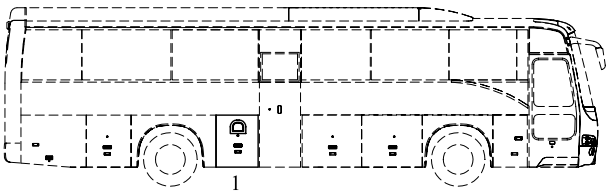

Uyku kabinli
with sleeping cabin

TB162Z
TB163Z

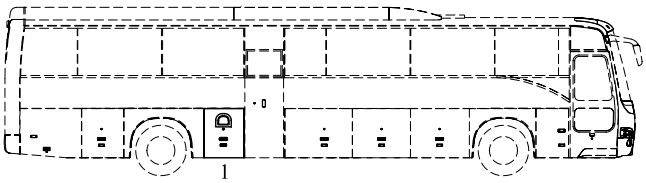

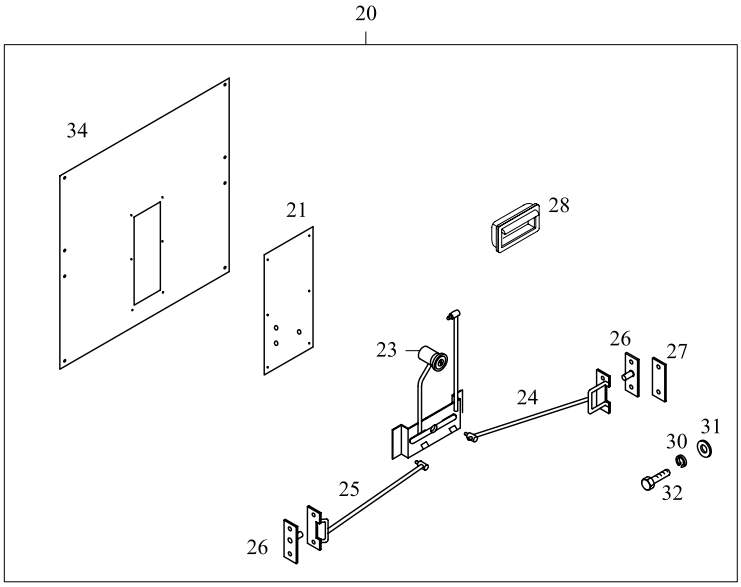

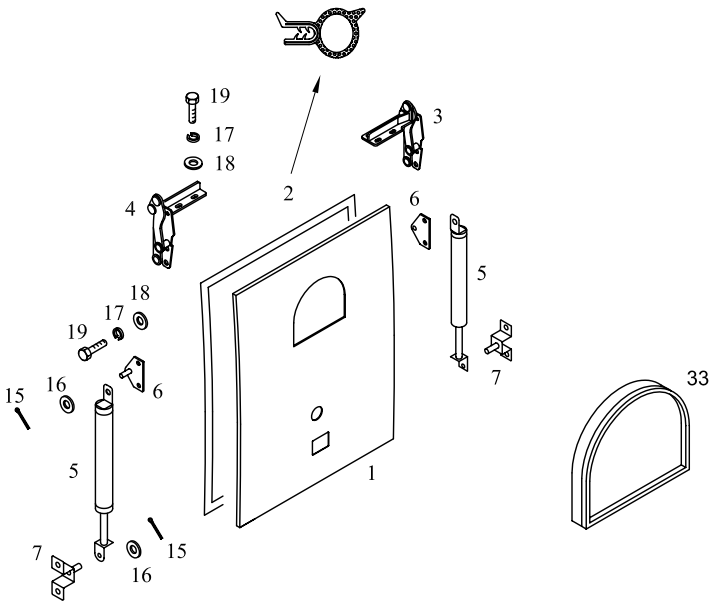

TEMSA	Yan kapak - Happich kilit Side lid - Happich lock Seiten deckeln	Drw.no 62102-97810-27Y Vehicle Model: **TB162W, TB162Z** **TB163W, TB163Z**	**28-035.1** RevDate: Page: 1

Pos	Part Number	Turkish	English	German	Qty	R/P	From	Up To	Original Number Supplier
1	62102-97750-79Y	YAN KAPAK	SIDE LID		1		010205		
2	62102-97550-22Y	FİTİL	WEATHER STRIP		1		1		
3	TC257622Y	MENTEŞE	HINGE ASSY		AR		1		
4	TC257623Y	MENTEŞE	HINGE ASSY		AR		1		
5	62102-70028-01Y	AMORTİSÖR	STAY DAMPER		2		1		
6	62102-94101-00Y	BRAKET	BRACKET		1		1		
7	MC211379Y	BRAKET	BRACKET		1		1		
15	MF472037Y	KOPİLYA	PIN SPLIT		AR		1		2*18
16	MF450005Y	PUL	WASHER PLAIN		AR		1		A8.5
17	MF450404Y	RONDELA	WASHER SPRING		AR		1		A6
18	MF450004Y	PUL	WASHER PLAIN		AR		1		A6.4
19	MF200079Y	CIVATA	SCREW MACHINE		AR		1		6*20
20	62102-97700-78Y	BAGAJ KİLİDİ KOMPLE	LOCK ASSY		1		1		
21	62102-97710-07Y	PANEL	PANEL		1		150504		
23	6020601X	KİLİT KOMPLESİ standart	LOCK ASSY standard	SCHLOSS KOMPLEX	1		150504		(BBAG_KILIT_02) HAPPICH
23	6020600X	KİLİT KOMPLESİ merkezi kilit	LOCK ASSY central locking	SCHLOSS KOMPLEX	1		150504		(BBAG_KILIT_03) HAPPICH central lock
24	62102-97710-75Y	KİLİT TELİ	CONNECTING ROD		1		150504		
25	62102-97710-83Y	KİLİT TELİ	CONNECTING ROD		1		150504		
26	MC324121Y	TUTUCU	STRIKE ASSY		2		1		
27	TU150136Y	ARA PARÇA	SHIM		2		1		
28	6020578X	TUTAMAK standart	HANDLE standard	HALTER	1		150504		(BBAG_KILIT_02) HAPPICH
28	6020571X	TUTAMAK merkezi kilit	HANDLE central locking	HALTER	1		150504		(BBAG_KILIT_03) HAPPICH central lock
30	MF450404Y	RONDELA	WASHER SPRING		AR		1		
31	MF450004Y	PUL	WASHER PLAIN		AR		1		
32	MF200079Y	CIVATA M6*1*20	BOLT		AR		1		
33	MK257243Y	UYKU KABİNİ PENCERESİ	WDO ASSY		1		1		
34	62102-96710-90Y	PANEL	PANEL		1		150504		

TEMSA	Yan kapaklar - standart kilit Side lids - standard lock Seiten deckeln	Group No : 28-036 Draw. Num. : x Rev. Date : Page : 1
	Vehicle Model: TB162W, TB163W,	

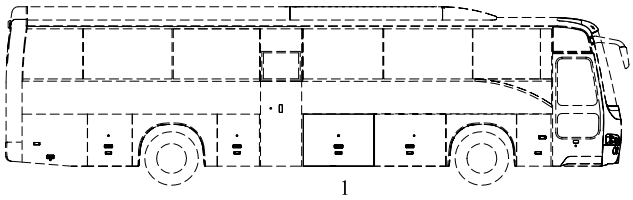

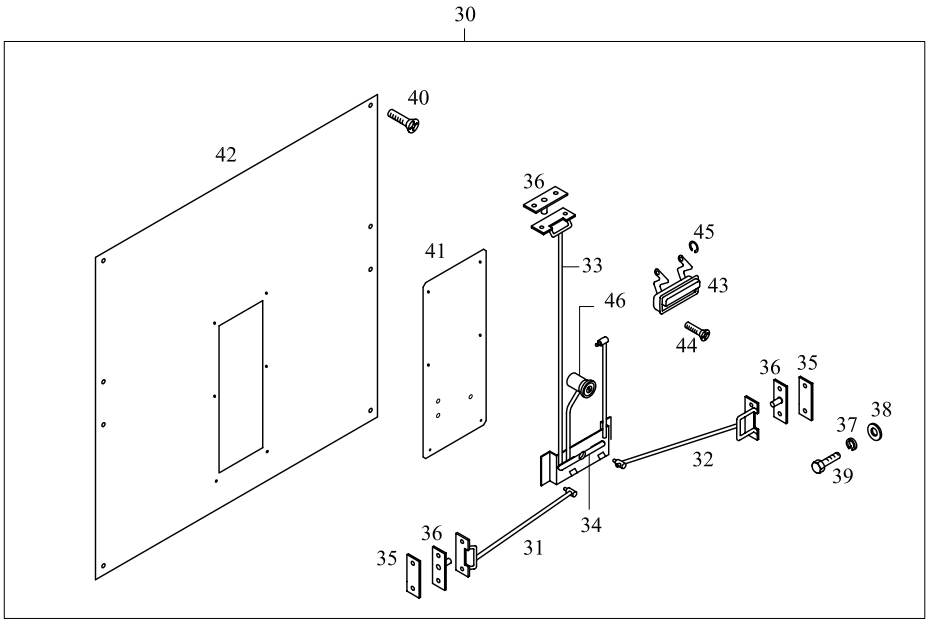

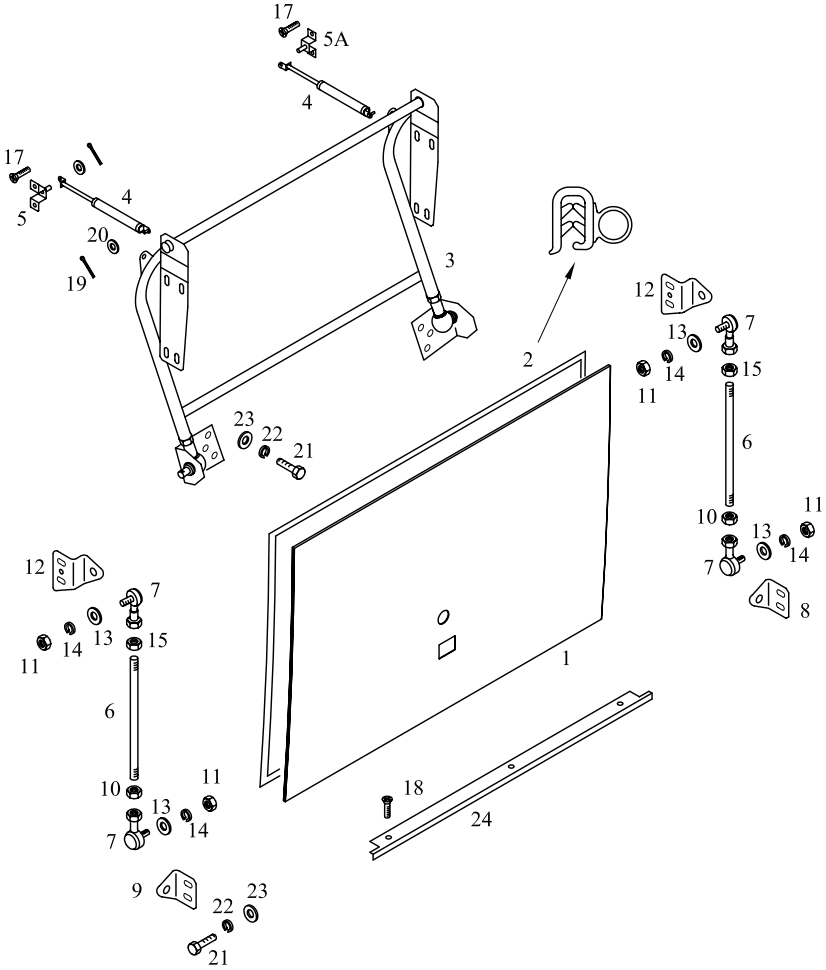

TEMSA	Yan kapak - standart kilit Side lid - standard lock Seiten deckeln	Drw.no 62102-96010-03Y Vehicle Model: **TB162W, TB162Z** **TB163W, TB163Z**	**28-036** RevDate: Page: 1

Pos	Part Number	Turkish	English	German	Qty	R/P	From	Up To	Original Number Supplier
1	62102-96550-71Y	YAN KAPAK	SIDE LID		1		1	150504	
1	62102-96550-71KY	YAN KAPAK	SIDE LID		1		150504		
2	TB112268Y	FİTİL	WEATHER STRIP		mt		1		
3	62102-96160-71Y	BAGAJ KOLU	ARM ASSY HINGE		1		1		
4	62102-70038-06Y	AMORTİSÖR	STAY DAMPER		2		1	280205	
4	62102-70028-01Y	AMORTİSÖR	STAY DAMPER		2		280205		
5	62102-11290-77Y	BRAKET	BRAKET		1		1		
5A	62102-70018-01Y	BRAKET	BRAKET		1		1		
6	62102-91570-00Y	ROD	ROD		2		1		
7	62102-61650-01Y	ROTIL	ROD END		2		1		
8	62102-91110-04Y	BRAKET	BRACKET		2		1		
9	62102-91110-05Y	BRAKET	BRACKET		2		1		
10	MS440031Y	SOMUN	NUT		AR		1		
11	MF430005PY	SOMUN	NUT		AR		1		
12	62102-91110-08Y	BRAKET	BRACKET		2		1		
13	MF450005PY	PUL	WASHER PLAIN		AR		1		
14	MF450405Y	RONDELA	WASHER SPRING		AR		1		
15	MF430006Y	SOMUN	NUT		AR		1		
16	62102-91110-12Y	BRAKET	BRACKET		2		1		
17	MC386109	VİDA	SCREW TAPPING		AR		1		
18	MF453615Y	VİDA	SCREW TAPPING		AR		1		
19	MF472037Y	KOPİLYA	PIN SPLIT		AR		1		
20	MF450154Y	PUL	WASHER PLAIN		AR		1		
21	MF100057Y	CIVATA M8*1.25*25	BOLT		AR		1		
22	MF450405Y	RONDELA	WASHER SPRING		AR		1		
23	MF450154Y	PUL	WASHER PLAIN		AR		1		
24	62102-96900-01Y	ALUMİNYUM ÇITA	PLATE EDGE		1		1	150504	
24	61714-96900-01Y	ALUMİNYUM ÇITA	PLATE EDGE		1		150504		
30	62102-96500-71Y	KİLİT	LOCK ASSY		1		1		
31	62102-97510-87Y	KİLİT TELİ	CONNECTING ROD		1		1		
32	62102-97510-77Y	KİLİT TELİ	CONNECTING ROD		1		1		
33	62102-80510-83Y	KİLİT TELİ	CONNECTING ROD		1		1		
34	62102-80340-70Y	KİLİT MEKANİZMASI	LINK ASSY		1		1		
35	TU150136Y	ARA PARÇA	SHIM		2		1		
36	MC324121Y	TUTUCU	STRIKE ASSY		2		1		

TEMSA	Yan kapak - standart kilit Side lid - standard lock Seiten deckeln	Drw.no 62102-96010-03Y Vehicle Model: **TB162W, TB162Z** **TB163W, TB163Z**	**28-036** RevDate: Page: 2

Pos	Part Number	Turkish	English	German	Qty	R/P	From	Up To	Original Number Supplier
37	MF450404Y	RONDELA	WASHER SPRING		AR		1		
38	MF450004Y	PUL	WASHER PLAIN		AR		1		
39	MF100029Y	CIVATA M6*1*20	BOLT		AR		1		
40	MF453017X	VİDA	SCREW		AR		1		
41	62102-97510-01Y	PANEL	PANEL		1		1		
42	62102-97510-97Y	PANEL	PANEL		1		1		
43	TC323896Y	TUTAMAK	HANDLE		1		1		
44	MF453615PY	VİDA	SCREW		AR		1		
45	MF522401Y	SEGMAN	RING SNAP		AR		1		
46	62102-94200-01X	KİLİT	LOCK ASSY		AR		1		

TEMSA	Yan kapaklar - Happich kilit Side lids - Happich lock Seiten deckeln	Group No : 28-036.1 Draw. Num. : x Rev. Date : Page : 1
	Vehicle Model: TB162W, TB163W,	

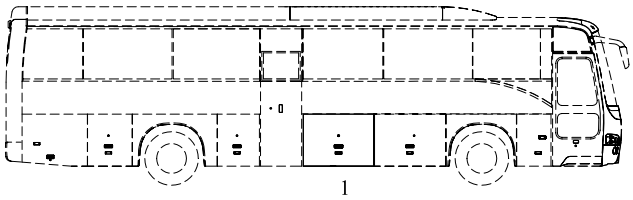

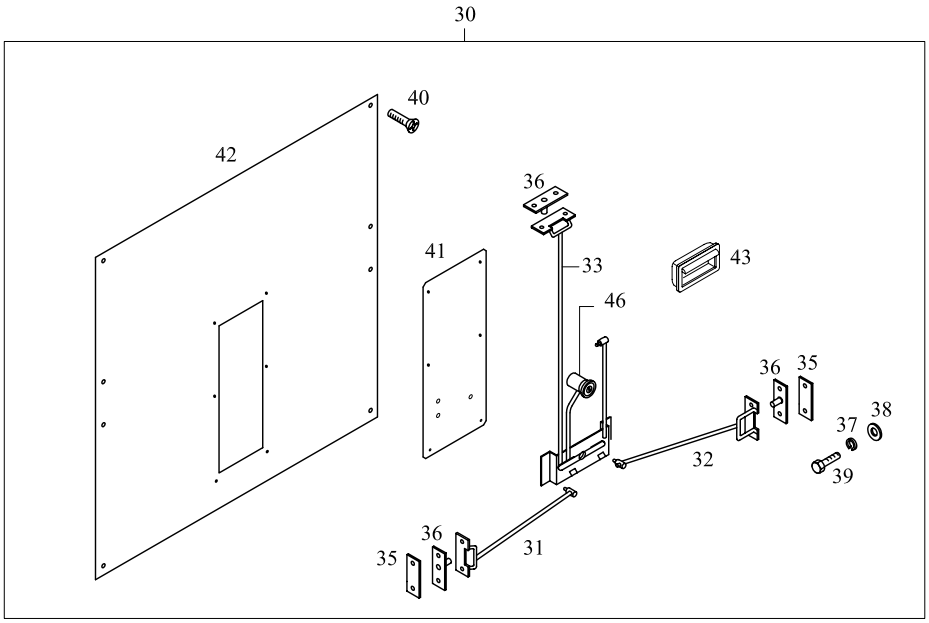

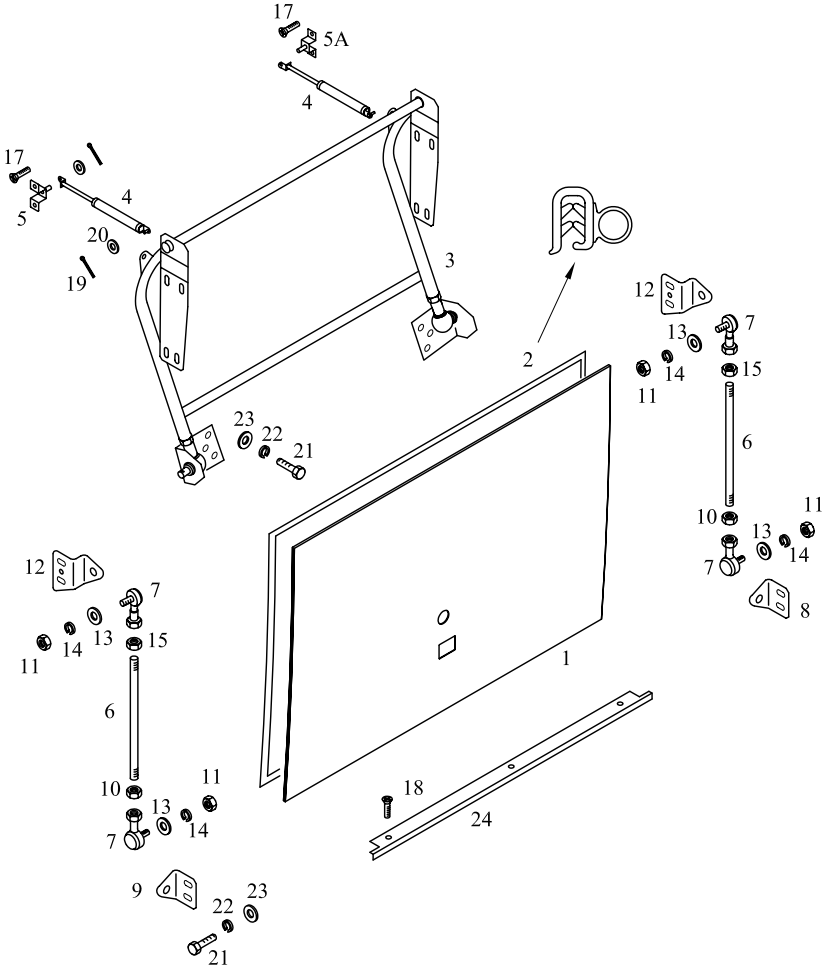

TEMSA	Yan kapak - Happich kilit Side lid - Happich lock Seiten deckeln	Drw.no 62102-96810-03Y Vehicle Model: **TB162W, TB162Z** **TB163W, TB163Z**	**28-036.1** RevDate: Page: 1

Pos	Part Number	Turkish	English	German	Qty	R/P	From	Up To	Original Number Supplier
1	62102-96750-71KY	YAN KAPAK	SIDE LID		1		1		
2	TB112268Y	FİTİL	WEATHER STRIP		mt		1		
3	62102-96160-71Y	BAGAJ KOLU	ARM ASSY HINGE		1		1		
4	62102-70038-06Y	AMORTİSÖR	STAY DAMPER		2		1	280305	
4	62102-70028-01Y	AMORTİSÖR	STAY DAMPER		2		280305		
5	62102-11290-77Y	BRAKET	BRAKET		1		1		
5A	62102-70018-01Y	BRAKET	BRAKET		1		1		
6	62102-91570-00Y	ROD	ROD		2		1		
7	62102-61650-01Y	ROTIL	ROD END		2		1		
8	62102-91110-04Y	BRAKET	BRACKET		2		1		
9	62102-91110-05Y	BRAKET	BRACKET		2		1		
10	MS440031Y	SOMUN	NUT		AR		1		
11	MF430005PY	SOMUN	NUT		AR		1		
12	62102-91110-08Y	BRAKET	BRACKET		2		1		
13	MF450005PY	PUL	WASHER PLAIN		AR		1		
14	MF450405Y	RONDELA	WASHER SPRING		AR		1		
15	MF430006Y	SOMUN	NUT		AR		1		
16	62102-91110-12Y	BRAKET	BRACKET		2		1		
17	MC386109	VİDA	SCREW TAPPING		AR		1		
18	MF453615Y	VİDA	SCREW TAPPING		AR		1		
19	MF472037Y	KOPİLYA	PIN SPLIT		AR		1		
20	MF450154Y	PUL	WASHER PLAIN		AR		1		
21	MF100057Y	CIVATA M8*1.25*25	BOLT		AR		1		
22	MF450405Y	RONDELA	WASHER SPRING		AR		1		
23	MF450154Y	PUL	WASHER PLAIN		AR		1		
24	62102-96900-01Y	ALUMİNYUM ÇITA	PLATE EDGE		1		1	150504	
24	61714-96900-01Y	ALUMİNYUM ÇITA	PLATE EDGE		1		150504		
30	62102-96700-71Y	KİLİT	LOCK ASSY		1		1		
31	62102-97710-86Y	KİLİT TELİ	CONNECTING ROD		1		1		
32	62102-97710-76Y	KİLİT TELİ	CONNECTING ROD		1		1		
33	62102-87510-83Y	KİLİT TELİ	CONNECTING ROD		1		1		
35	TU150136Y	ARA PARÇA	SHIM		2		1		
36	MC324121Y	TUTUCU	STRIKE ASSY		2		1		
37	MF450404Y	RONDELA	WASHER SPRING		AR		1		
38	MF450004Y	PUL	WASHER PLAIN		AR		1		

TEMSA	Yan kapak - Happich kilit Side lid - Happich lock Seiten deckeln	Drw.no 62102-96010-70/71 Vehicle Model: **TB162W, TB162Z** **TB163W, TB163Z**	**28-036.1** RevDate: Page: 2

Pos	Part Number	Turkish	English	German	Qty	R/P	From	Up To	Original Number Supplier
39	MF100029Y	CIVATA M6*1*20	BOLT		AR		1		
40	MF453017X	VİDA	SCREW		AR		1		
41	62102-97710-01Y	PANEL	PANEL		4		1		
42	62102-97710-96Y	PANEL	PANEL		1		1		
43	6020578X	TUTAMAK standart	HANDLE standard	HALTER	1		150504		(BBAG_KILIT_02) HAPPICH
43	6020571X	TUTAMAK merkezi kilit	HANDLE central locking	HALTER	1		150504		(BBAG_KILIT_03) HAPPICH central lock
46	6020601X	KİLİT KOMPLESİ standart	LOCK ASSY standard	SCHLOSS KOMPLEX	1		150504		(BBAG_KILIT_02) HAPPICH
46	6020600X	KİLİT KOMPLESİ merkezi kilit	LOCK ASSY central locking	SCHLOSS KOMPLEX	1		150504		(BBAG_KILIT_03) HAPPICH central lock

TEMSA	Yan kapaklar - standart kilit Side lids - standard lock Seiten deckeln	Group No : 28-037 Draw. Num. : x Rev. Date : Page : 1
	Vehicle Model: TB162W, TB163W,	

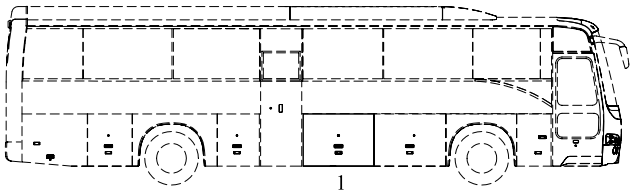

tuvaletli
with toilet

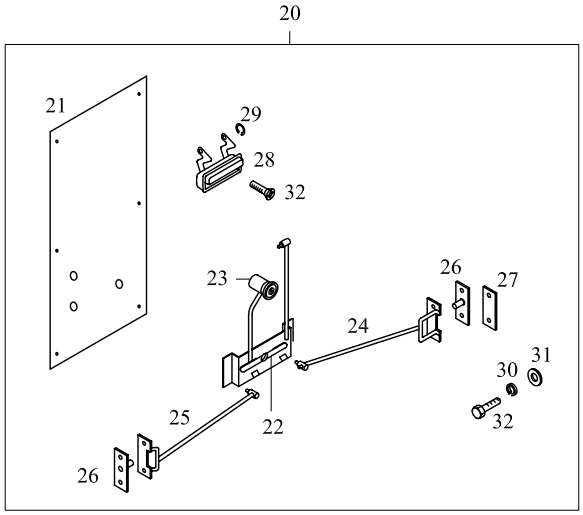

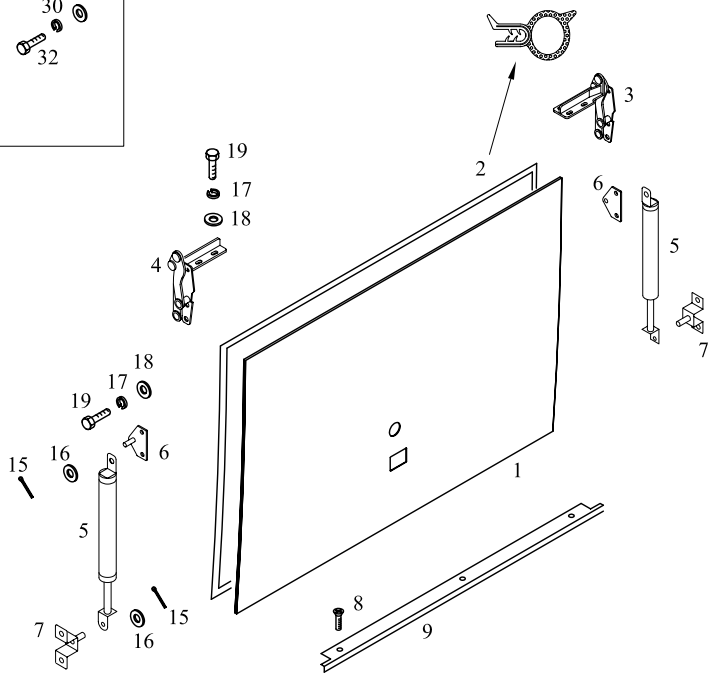

TEMSA	Yan kapak - standart kilit Side lid - standard lock Seiten deckeln	Drw.no Vehicle Model: **TB162W** **TB163W**	**28-037** RevDate: Page: 1

Pos	Part Number	Turkish	English	German	Qty	R/P	From	Up To	Original Number Supplier
1	62102-96550-72AY	YAN KAPAK	SIDE LID		1		1	150504	with toilet
1	62102-96550-72AKY	YAN KAPAK	SIDE LID		1		150504		with toilet
2	62102-97550-21Y	FİTİL	WEATHER STRIP		1		1		
3	TC257622Y	MENTEŞE	HINGE ASSY		1		1		
4	TC257623Y	MENTEŞE	HINGE ASSY		1		1		
5	62102-70038-07Y	AMORTİSÖR	STAY DAMPER		2		1		
6	62102-94101-00Y	BRAKET	BRACKET		1		1		
7	MC211379Y	BRAKET	BRACKET		1		1		
8	MF453615Y	VİDA	SCREW TAPPING		AR		1		
9	62102-96900-01Y	ALUMİNYUM ÇITA	PLATE EDGE		1		1	150504	
9	61714-96900-01Y	ALUMİNYUM ÇITA	PLATE EDGE		1		150504		
15	MF472037Y	KOPİLYA	PIN SPLIT		AR		1		2*18
16	MF450005Y	PUL	WASHER PLAIN		AR		1		A8.5
17	MF450404Y	RONDELA	WASHER SPRING		AR		1		A6
18	MF450004Y	PUL	WASHER PLAIN		AR		1		A6.4
19	MF200079Y	CIVATA	SCREW MACHINE		AR		1		6*20
20	62102-97550-31Y	BAGAJ KİLİDİ KOMPLE	LOCK ASSY		1		1		
21	62102-80510-75Y	PANEL	PANEL		1		1		
22	62102-80340-70Y	KİLİT MEKANİZMASI	LINK ASSY		1		1		
23	62102-94200-01X	KİLİT	LOCK		1		1		
24	62102-97550-02Y	KİLİT TELİ	CONNECTING ROD		1		1		
25	62102-97550-05Y	KİLİT TELİ	CONNECTING ROD		1		1		
26	MC324121Y	TUTUCU	STRIKE ASSY		2		1		
27	TU150136Y	ARA PARÇA	SHIM		2		1		
28	TC323896Y	TUTAMAK	HANDLE		1		1		
29	MF522401Y	SEGMAN	RING SNAP		AR		1		
30	MF450404Y	RONDELA	WASHER SPRING		AR		1		
31	MF450004Y	PUL	WASHER PLAIN		AR		1		
32	MF200079Y	CIVATA M6*1*20	BOLT		AR		1		

TEMSA	Yan kapaklar - Happich kilit Side lids - Happich lock Seiten deckeln	Group No : 28-037.1 Draw. Num. : x Rev. Date : Page : 1
	Vehicle Model: TB162W, TB163W,	

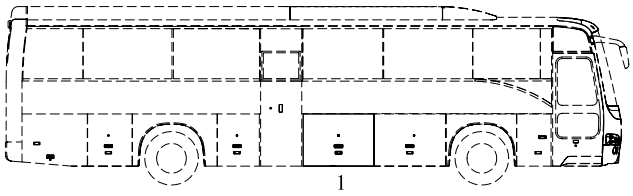

tuvaletli
with toilet

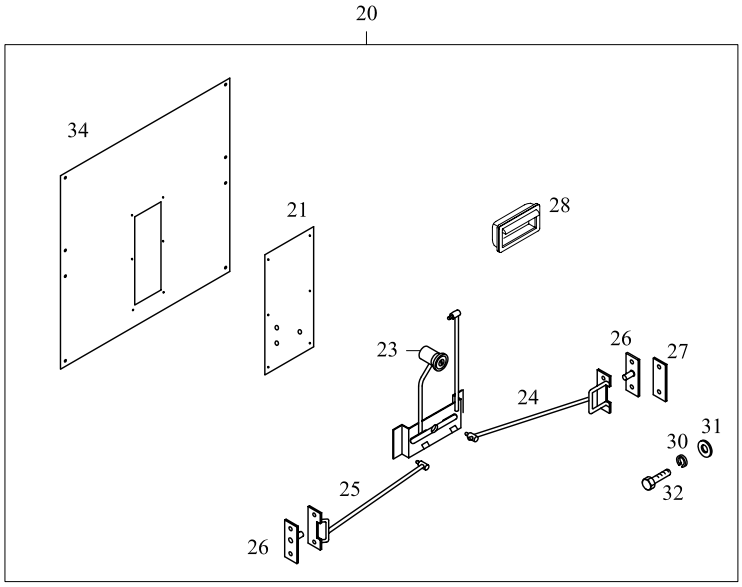

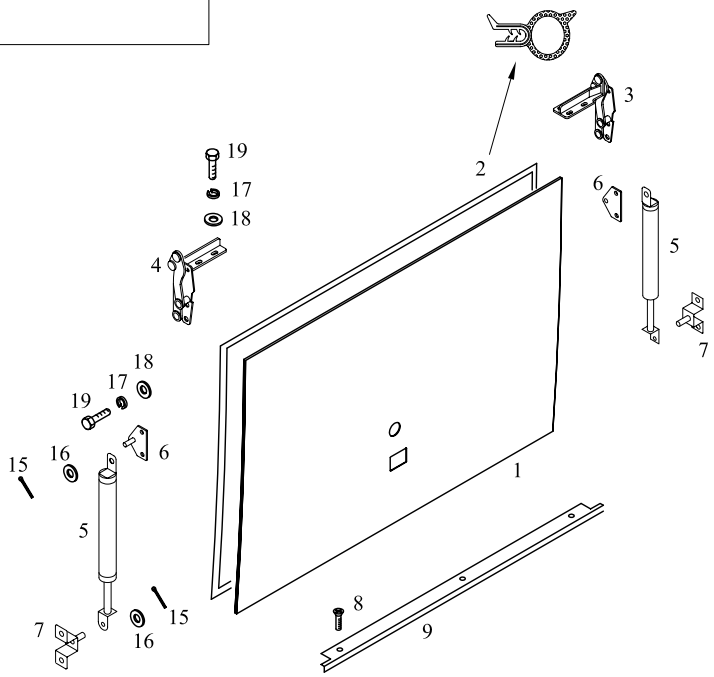

TEMSA	Yan kapak - Happich kilit Side lid - Happich lock Seiten deckeln	Drw.no 62102-96810-15Y Vehicle Model: **TB162W** **TB163W**	**28-037.1** RevDate: Page: 1

Pos	Part Number	Turkish	English	German	Qty	R/P	From	Up To	Original Number Supplier
1	62102-96750-72KY	YAN KAPAK	SIDE LID		1		150504		with toilet
2	62102-97550-21Y	FİTİL	WEATHER STRIP		1		1		
3	TC257622Y	MENTEŞE	HINGE ASSY		AR		1		
4	TC257623Y	MENTEŞE	HINGE ASSY		AR		1		
5	62102-70038-07Y	AMORTİSÖR	STAY DAMPER		4		1		
6	62102-94101-00Y	BRAKET	BRACKET		4		1		
7	MC211379Y	BRAKET	BRACKET		4		1		
8	MF453615Y	VİDA	SCREW TAPPING		36		1		
9	62102-96900-01Y	ALUMİNYUM ÇITA	PLATE EDGE		1		1	150504	
9	61714-96900-01Y	ALUMİNYUM ÇITA	PLATE EDGE		1		150504		
15	MF472037Y	KOPİLYA	PIN SPLIT		AR		1		2*18
16	MF450005Y	PUL	WASHER PLAIN		AR		1		A8.5
17	MF450404Y	RONDELA	WASHER SPRING		AR		1		A6
18	MF450004Y	PUL	WASHER PLAIN		AR		1		A6.4
19	MF200079Y	CIVATA	SCREW MACHINE		AR		1		6*20
20	62102-96700-72Y	BAGAJ KİLİDİ KOMPLE	LOCK ASSY		1		1		
21	62102-97710-03Y	PANEL	PANEL		1		150504		
23	6020601X	KİLİT KOMPLESİ standart	LOCK ASSY standard	SCHLOSS KOMPLEX	1		150504		(BBAG_KILIT_02) HAPPICH
23	6020600X	KİLİT KOMPLESİ merkezi kilit	LOCK ASSY central locking	SCHLOSS KOMPLEX	1		150504		(BBAG_KILIT_03) HAPPICH central lock
24	62102-97710-86Y	KİLİT TELİ	CONNECTING ROD		1		1		
25	62102-97710-77Y	KİLİT TELİ	CONNECTING ROD		1		1		
26	MC324121Y	TUTUCU	STRIKE ASSY		2		1		
27	TU150136Y	ARA PARÇA	SHIM		2		1		
28	6020578X	TUTAMAK standart	HANDLE standard	HALTER	1		150504		(BBAG_KILIT_02) HAPPICH
28	6020571X	TUTAMAK merkezi kilit	HANDLE central locking	HALTER	1		150504		(BBAG_KILIT_03) HAPPICH central lock
29	MF522401Y	SEGMAN	RING SNAP		AR		1		
30	MF450404Y	RONDELA	WASHER SPRING		AR		1		
31	MF450004Y	PUL	WASHER PLAIN		AR		1		
32	MF200079Y	CIVATA M6*1*20	BOLT		AR		1		
34	62102-96710-98Y	IC PANEL	PANEL		1		150504		

TEMSA	Yan kapaklar - standart kilit Side lids - standard lock Seiten deckeln	Group No : 28-038 Draw. Num. : x Rev. Date : Page : 1
	Vehicle Model: TB162W, TB163W,	

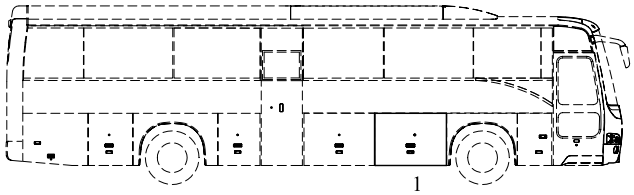

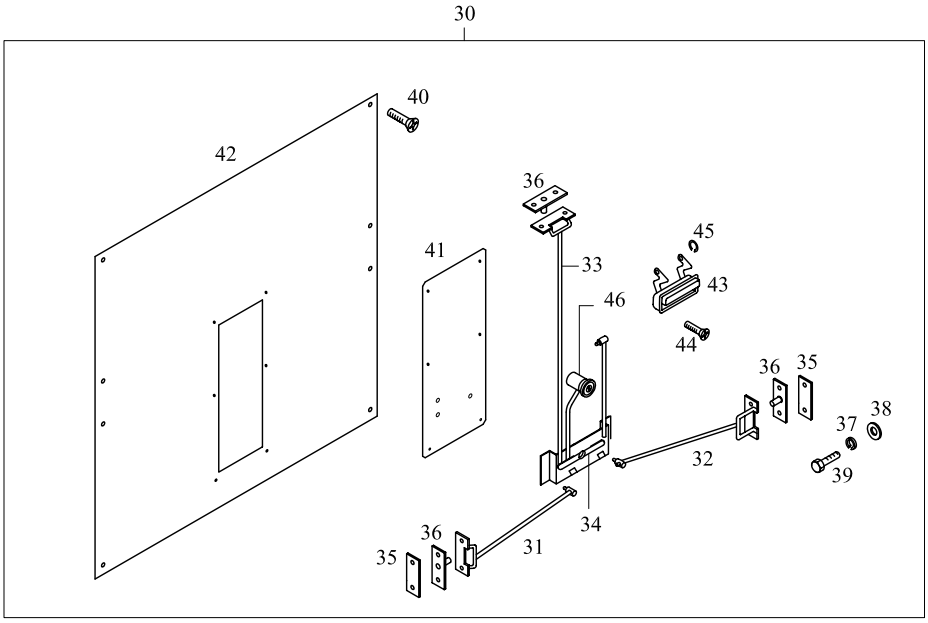

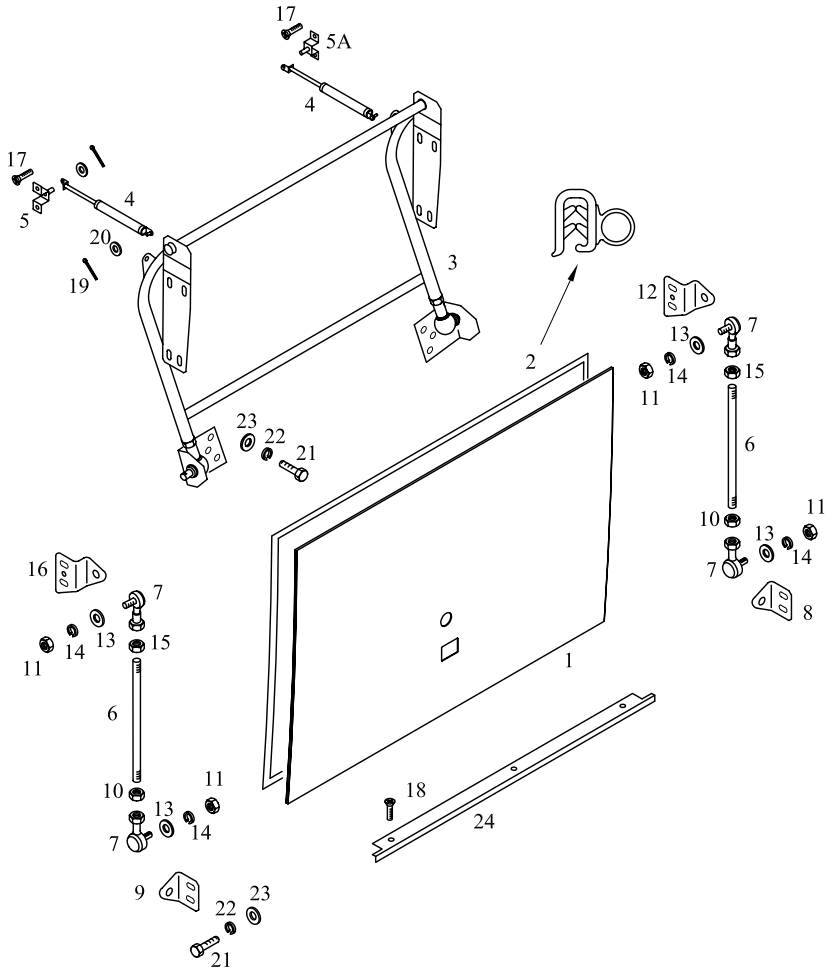

TEMSA	Yan kapak - standart kilit Side lid - standard lock Seiten deckeln	Drw.no 62102-96010-17Y Vehicle Model: **TB162W** **TB163W**	**28-038** RevDate: Page: 1

Pos	Part Number	Turkish	English	German	Qty	R/P	From	Up To	Original Number Supplier
1	62102-96550-70Y	YAN KAPAK	SIDE LID		1		1	150504	
1	62102-96550-70KY	YAN KAPAK	SIDE LID		1		150504		
2	TB112268Y	FİTİL	WEATHER STRIP		mt		1		
3	62102-96160-72Y	BAGAJ KOLU	ARM ASSY HINGE		1		1		
4	62102-70038-06Y	AMORTİSÖR	STAY DAMPER		2		1	280205	
4	62102-70028-01Y	AMORTİSÖR	STAY DAMPER		2		280205		
5	62102-11290-77Y	BRAKET	BRAKET		1		1		
5A	62102-70018-01Y	BRAKET	BRAKET		1		1		
6	62102-91570-00Y	ROD	ROD		2		1		
7	62102-61650-01Y	ROTIL	ROD END		2		1		
8	62102-91110-04Y	BRAKET	BRACKET		2		1		
9	62102-91110-05Y	BRAKET	BRACKET		2		1		
10	MS440031Y	SOMUN	NUT		AR		1		
11	MF430005PY	SOMUN	NUT		AR		1		
12	62102-91110-08Y	BRAKET	BRACKET		2		1		
13	MF450005PY	PUL	WASHER PLAIN		AR		1		
14	MF450405Y	RONDELA	WASHER SPRING		AR		1		
15	MF430006Y	SOMUN	NUT		AR		1		
16	62102-91110-12Y	BRAKET	BRACKET		2		1		
17	MC386109	VİDA	SCREW TAPPING		AR		1		
18	MF453615Y	VİDA	SCREW TAPPING		AR		1		
19	MF472037Y	KOPİLYA	PIN SPLIT		AR		1		
20	MF450154Y	PUL	WASHER PLAIN		AR		1		
21	MF100057Y	CIVATA M8*1.25*25	BOLT		AR		1		
22	MF450405Y	RONDELA	WASHER SPRING		AR		1		
23	MF450154Y	PUL	WASHER PLAIN		AR		1		
24	62102-96900-01Y	ALUMİNYUM ÇITA	PLATE EDGE		1		1	150504	
24	61714-96900-01Y	ALUMİNYUM ÇITA	PLATE EDGE		1		150504		
30	62102-96500-70Y	KİLİT	LOCK ASSY		1		1		
31	62102-97510-86Y	KİLİT TELİ	CONNECTING ROD		1		1		
32	62102-97510-76Y	KİLİT TELİ	CONNECTING ROD		1		1		
33	62102-80510-83Y	KİLİT TELİ	CONNECTING ROD		1		1		
34	62102-80340-70Y	KİLİT MEKANİZMASI	LINK ASSY		1		1		
35	TU150136Y	ARA PARÇA	SHIM		2		1		
36	MC324121Y	TUTUCU	STRIKE ASSY		2		1		

TEMSA	Yan kapak - standart kilit Side lid - standard lock Seiten deckeln	Drw.no Vehicle Model: **TB162W** **TB163W**	**28-038** RevDate: Page: 2

Pos	Part Number	Turkish	English	German	Qty	R/P	From	Up To	Original Number Supplier
37	MF450404Y	RONDELA	WASHER SPRING		AR		1		
38	MF450004Y	PUL	WASHER PLAIN		AR		1		
39	MF100029Y	CIVATA M6*1*20	BOLT		AR		1		
40	MF453017X	VİDA	SCREW		AR		1		
41	62102-97510-01Y	PANEL	PANEL		1		1		
42	62102-97510-96Y	PANEL	PANEL		1		1		
43	TC323896Y	TUTAMAK	HANDLE		1		1		
44	MF453615PY	VİDA	SCREW		AR		1		
45	MF522401Y	SEGMAN	RING SNAP		AR		1		
46	62102-94200-01X	KİLİT	LOCK ASSY		1		1		

TEMSA	Yan kapaklar - Happich kilit Side lids - Happich lock Seiten deckeln	Group No : 28-038.1 Draw. Num. : x Rev. Date : Page : 1
	Vehicle Model: TB162W, TB163W,	

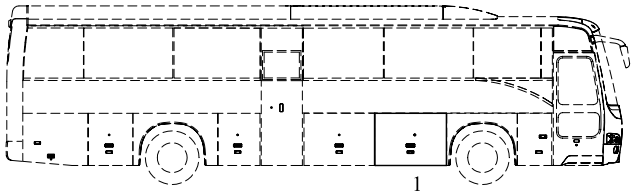

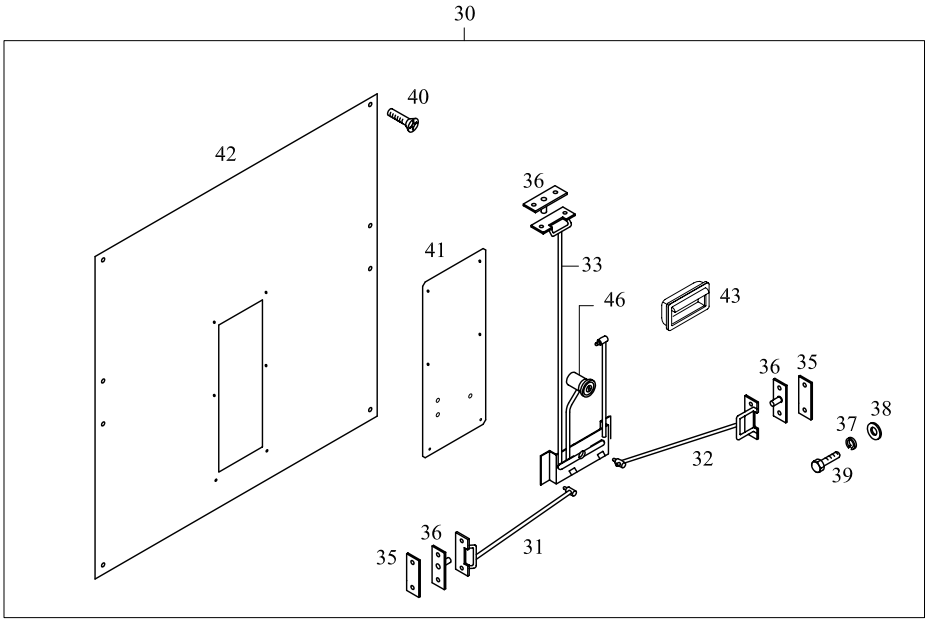

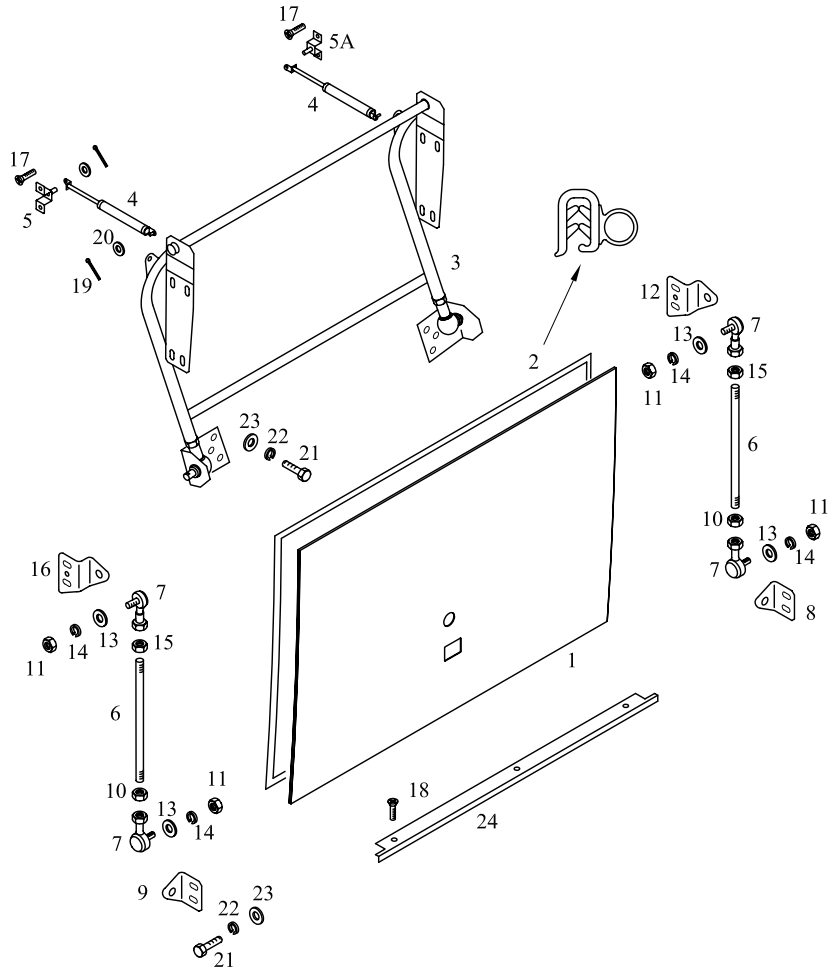

TEMSA	Yan kapak - Happich kilit Side lid - Happich lock Seiten deckeln	Drw.no 62102-96810-17Y Vehicle Model: **TB162W** **TB163W**	**28-038.1** RevDate: Page: 1

Pos	Part Number	Turkish	English	German	Qty	R/P	From	Up To	Original Number Supplier
1	62102-96750-70KY	YAN KAPAK	SIDE LID		1		150504		
2	TB112268Y	FİTİL	WEATHER STRIP		mt		1		
3	62102-96160-72Y	BAGAJ KOLU	ARM ASSY HINGE		1		1		
4	62102-70038-06Y	AMORTİSÖR	STAY DAMPER		2		1	150504	
4	62102-70028-01Y	AMORTİSÖR	STAY DAMPER		2		150504		
5	62102-11290-77Y	BRAKET	BRAKET		1		1		
5A	62102-70018-01Y	BRAKET	BRAKET		1		1		
6	62102-91570-00Y	ROD	ROD		2		1		
7	62102-61650-01Y	ROTIL	ROD END		2		1		
8	62102-91110-04Y	BRAKET	BRACKET		2		1		
9	62102-91110-05Y	BRAKET	BRACKET		2		1		
10	MS440031Y	SOMUN	NUT		AR		1		
11	MF430005PY	SOMUN	NUT		AR		1		
12	62102-91110-08Y	BRAKET	BRACKET		2		1		
13	MF450005PY	PUL	WASHER PLAIN		AR		1		
14	MF450405Y	RONDELA	WASHER SPRING		AR		1		
15	MF430006Y	SOMUN	NUT		AR		1		
16	62102-91110-12Y	BRAKET	BRACKET		2		1		
17	MC386109	VİDA	SCREW TAPPING		AR		1		
18	MF453615Y	VİDA	SCREW TAPPING		AR		1		
19	MF472037Y	KOPİLYA	PIN SPLIT		AR		1		
20	MF450154Y	PUL	WASHER PLAIN		AR		1		
21	MF100057Y	CIVATA M8*1.25*25	BOLT		AR		1		
22	MF450405Y	RONDELA	WASHER SPRING		AR		1		
23	MF450154Y	PUL	WASHER PLAIN		AR		1		
24	62102-96900-01Y	ALUMİNYUM ÇITA	PLATE EDGE		1		1	150504	
24	61714-96900-01Y	ALUMİNYUM ÇITA	PLATE EDGE		1		150504		
30	62102-96700-70Y	KİLİT	LOCK ASSY		1		150504		
31	62102-97710-86Y	KİLİT TELİ	CONNECTING ROD		1		150504		
32	62102-97710-76Y	KİLİT TELİ	CONNECTING ROD		1		150504		
33	62102-87510-83Y	KİLİT TELİ	CONNECTING ROD		1		1		
35	TU150136Y	ARA PARÇA	SHIM		AR		1		
36	MC324121Y	TUTUCU	STRIKE ASSY		AR		1		
37	MF450404Y	RONDELA	WASHER SPRING		AR		1		
38	MF450004Y	PUL	WASHER PLAIN		AR		1		

TEMSA	Yan kapak - Happich kilit Side lid - Happich lock Seiten deckeln	Drw.no Vehicle Model: **TB162W** **TB163W**	**28-038.1** RevDate: Page: 2

Pos	Part Number	Turkish	English	German	Qty	R/P	From	Up To	Original Number Supplier
39	MF100029Y	CIVATA M6*1*20	BOLT		AR		1		
40	MF453017X	VİDA	SCREW		AR		1		
41	62102-97710-01Y	PANEL	PANEL		1		150504		
42	62102-97710-96Y	PANEL	PANEL		1		150504		
43	6020578X	TUTAMAK standart	HANDLE standard	HALTER	1		150504		(BBAG_KILIT_02) HAPPICH
43	6020571X	TUTAMAK merkezi kilit	HANDLE central locking	HALTER	1		150504		(BBAG_KILIT_03) HAPPICH central lock
46	6020601X	KİLİT KOMPLESİ standart	LOCK ASSY standard	SCHLOSS KOMPLEX	1		150504		(BBAG_KILIT_02) HAPPICH
46	6020600X	KİLİT KOMPLESİ merkezi kilit	LOCK ASSY central locking	SCHLOSS KOMPLEX	1		150504		(BBAG_KILIT_03) HAPPICH central lock

TEMSA	Yan kapaklar - standart kilit Side lids - standard lock Seiten deckeln	Group No : 28-040 Draw. Num. : x Rev. Date :
	Vehicle Model: TB162Z, TB163Z,	Page : 1

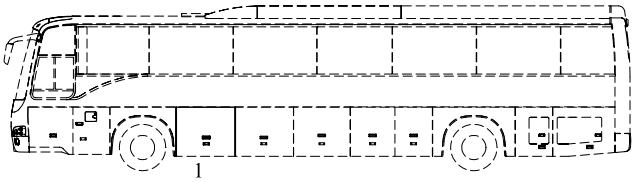

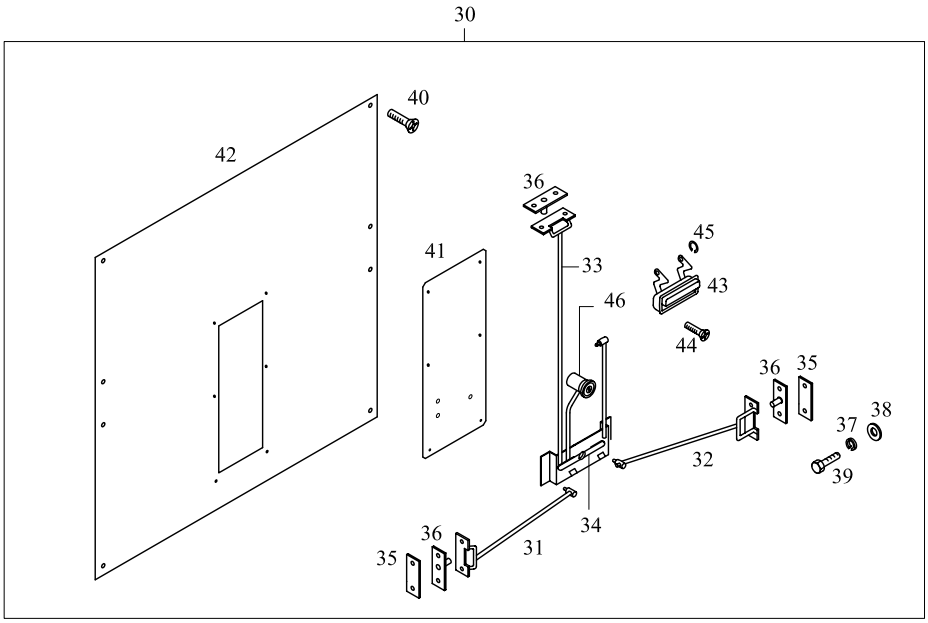

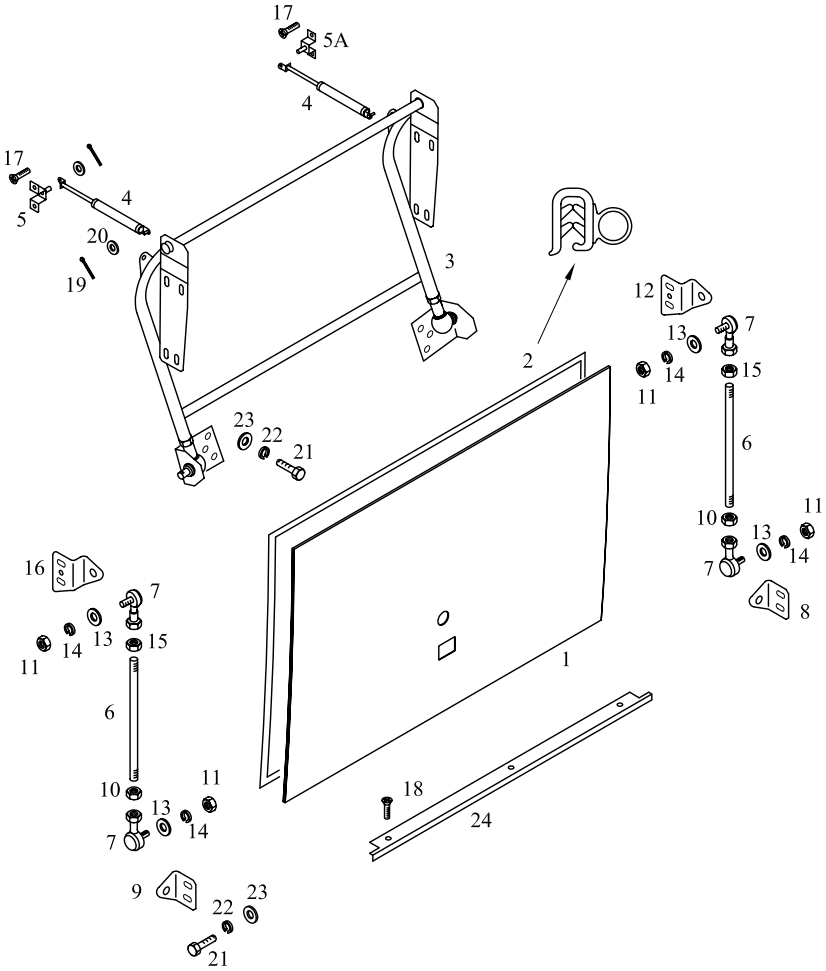

TEMSA	Yan kapak - standart kilit Side lid - standard lock Seiten deckeln	Drw.no 62102-97010-18Y Vehicle Model: **TB162Z** **TB163Z**	**28-040** RevDate: Page: 1

Pos	Part Number	Turkish	English	German	Qty	R/P	From	Up To	Original Number Supplier
1	62102-97550-70Y	YAN KAPAK	SIDE LID		1		1	150504	
1	62102-97550-70KY	YAN KAPAK	SIDE LID		1		150504		
2	TB112268Y	FİTİL	WEATHER STRIP		AR		1		
3	62102-97160-75Y	BAGAJ KOLU	ARM ASSY HINGE		1		1		
4	62102-70028-01Y	AMORTİSÖR	STAY DAMPER		2		1		
5	62102-11290-77Y	BRAKET	BRAKET		1		1		
5A	62102-70018-01Y	BRAKET	BRAKET		1		1		
6	62102-91570-00Y	ROD	ROD		2		1		
7	62102-61650-01Y	ROTIL	ROD END		2		1		
8	62102-91110-04Y	BRAKET	BRACKET		1		1		
9	62102-91110-05Y	BRAKET	BRACKET		1		1		
10	MS440031Y	SOMUN M10x1,25-5,6	NUT		AR		1		
11	MF430005PY	SOMUN M8	NUT		AR		1		
12	62102-91110-08Y	BRAKET	BRACKET		1		1		
13	MF450005PY	PUL	WASHER PLAIN		AR		1		
14	MF450405Y	RONDELA	WASHER SPRING		AR		1		
15	MF430006Y	SOMUN	NUT		AR		1		
16	62102-91110-12Y	BRAKET	BRACKET		1		1		
17	MC386109	VİDA	SCREW TAPPING		AR		1		
18	MF453615Y	VİDA	SCREW TAPPING		AR		1		
19	MF472037Y	KOPİLYA	PIN SPLIT		AR		1		
20	MF450154Y	PUL	WASHER PLAIN		AR		1		
21	MF100057Y	CIVATA M8*1.25*25	BOLT		AR		1		
22	MF450405Y	RONDELA	WASHER SPRING		AR		1		
23	MF450154Y	PUL	WASHER PLAIN		AR		1		
24	62102-81220-07Y	ALUMİNYUM ÇITA	PLATE EDGE		1		1		
30	62102-97500-70Y	KİLİT KOMPLE	LOCK ASSY		1		1		
31	62102-97510-80Y	KİLİT TELİ	CONNECTING ROD		1		1		
32	62102-97510-70Y	KİLİT TELİ	CONNECTING ROD		1		1		
33	62102-80510-83Y	KİLİT TELİ	CONNECTING ROD		1		1		
34	62102-80340-70Y	KİLİT MEKANİZMASI	LINK ASSY		1		1		
35	TU150136Y	ARA PARÇA	SHIM		2		1		
36	MC324121Y	TUTUCU	STRIKE ASSY		3		1		
37	MF450404Y	RONDELA	WASHER SPRING		AR		1		
38	MF450004Y	PUL	WASHER PLAIN		AR		1		

TEMSA	Yan kapak - standart kilit Side lid - standard lock Seiten deckeln	Drw.no Vehicle Model: **TB162Z** **TB163Z**	**28-040** RevDate: Page: 2

Pos	Part Number	Turkish	English	German	Qty	R/P	From	Up To	Original Number Supplier
39	MF100029Y	CIVATA M6*1*20	BOLT		AR		1		
40	MF453017X	VİDA	SCREW		AR		1		
41	62102-97510-01Y	PANEL	PANEL		1		1		
42	62102-97510-90Y	İÇ PANEL	PANEL INNER		1		1		
43	TC323896Y	TUTAMAK	HANDLE		AR		1		
44	MF453615PY	VİDA	SCREW		AR		1		
45	MF522401Y	SEGMAN	RING SNAP		AR		1		
46	62102-94200-01X	KİLİT	LOCK ASSY		AR		1		

TEMSA	Yan kapaklar - Happich kilit Side lids - Happich lock Seiten deckeln	Group No : 28-040.1 Draw. Num. : x Rev. Date : Page : 1
	Vehicle Model: TB162Z, TB163Z,	

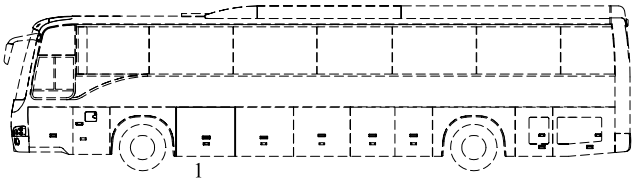

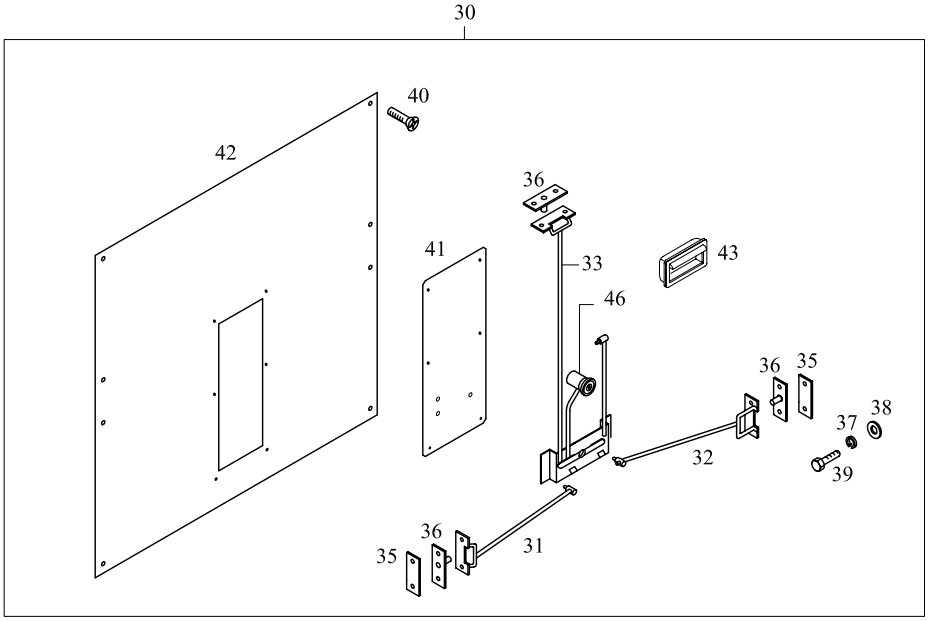

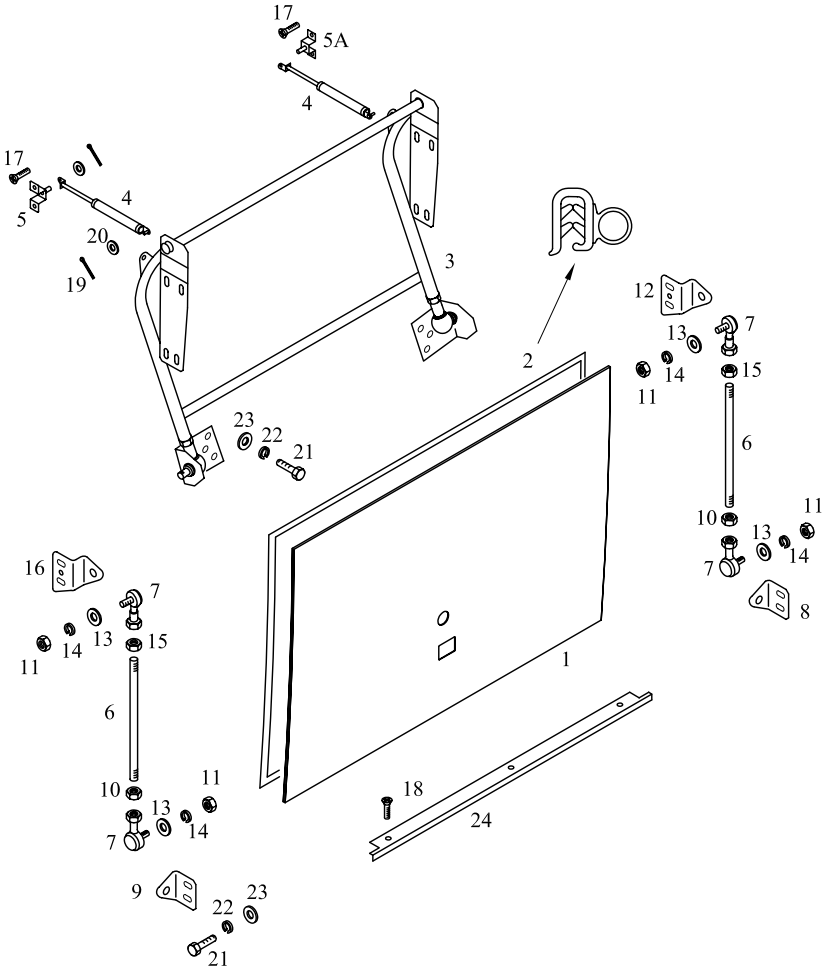

TEMSA	Yan kapak - Happich kilit Side lid - Happich lock Seiten deckeln	Drw.no 62102-97810-18Y Vehicle Model: **TB162Z** **TB163Z**	**28-040.1** RevDate: Page: 1

Pos	Part Number	Turkish	English	German	Qty	R/P	From	Up To	Original Number Supplier
1	62102-97750-70KY	YAN KAPAK	SIDE LID		1		150504		
2	TB112268Y	FİTİL	WEATHER STRIP		AR		1		
3	62102-97160-75Y	BAGAJ KOLU	ARM ASSY HINGE		1		1		
4	62102-70028-01Y	AMORTİSÖR	STAY DAMPER		2		1		
5	62102-11290-77Y	BRAKET	BRAKET		1		1		
5A	62102-70018-01Y	BRAKET	BRAKET		1		1		
6	62102-91570-00Y	ROD	ROD		2		1		
7	62102-61650-01Y	ROTIL	ROD END		2		1		
8	62102-91110-04Y	BRAKET	BRACKET		1		1		
9	62102-91110-05Y	BRAKET	BRACKET		1		1		
10	MS440031Y	SOMUN M10x1,25-5,6	NUT		AR		1		
11	MF430005PY	SOMUN M8	NUT		AR		1		
12	62102-91110-08Y	BRAKET	BRACKET		1		1		
13	MF450005PY	PUL	WASHER PLAIN		AR		1		
14	MF450405Y	RONDELA	WASHER SPRING		AR		1		
15	MF430006Y	SOMUN	NUT		AR		1		
16	62102-91110-12Y	BRAKET	BRACKET		1		1		
17	MC386109	VİDA	SCREW TAPPING		AR		1		
18	MF453615Y	VİDA	SCREW TAPPING		AR		1		
19	MF472037Y	KOPİLYA	PIN SPLIT		AR		1		
20	MF450154Y	PUL	WASHER PLAIN		AR		1		
21	MF100057Y	CIVATA M8*1.25*25	BOLT		AR		1		
22	MF450405Y	RONDELA	WASHER SPRING		AR		1		
23	MF450154Y	PUL	WASHER PLAIN		AR		1		
24	62102-81220-07Y	ALUMİNYUM ÇITA	PLATE EDGE		1		1		
30	62102-97700-70Y	KİLİT KOMPLE	LOCK ASSY		1		150504		
31	62102-97710-80Y	KİLİT TELİ	CONNECTING ROD		1		150504		
32	62102-97710-70Y	KİLİT TELİ	CONNECTING ROD		1		150504		
33	62102-87510-83Y	KİLİT TELİ	CONNECTING ROD		1		150504		
35	TU150136Y	ARA PARÇA	SHIM		2		1		
36	MC324121Y	TUTUCU	STRIKE ASSY		3		1		
37	MF450404Y	RONDELA	WASHER SPRING		AR		1		
38	MF450004Y	PUL	WASHER PLAIN		AR		1		
39	MF100029Y	CIVATA M6*1*20	BOLT		AR		1		
40	MF453017X	VİDA	SCREW		AR		1		

TEMSA	Yan kapak - Happich kilit Side lid - Happich lock Seiten deckeln	Drw.no Vehicle Model: **TB162Z** **TB163Z**	**28-040.1** RevDate: Page: 1

Pos	Part Number	Turkish	English	German	Qty	R/P	From	Up To	Original Number Supplier
41	62102-97710-01Y	PANEL	PANEL		1		150504		
42	62102-97710-90Y	İÇ PANEL	PANEL INNER		1		150504		
43	6020578X	TUTAMAK standart	HANDLE standard	HALTER	1		150504		(BBAG_KILIT_02) HAPPICH
43	6020571X	TUTAMAK merkezi kilit	HANDLE central locking	HALTER	1		150504		(BBAG_KILIT_03) HAPPICH central lock
46	6020601X	KİLİT KOMPLESİ standart	LOCK ASSY standard	SCHLOSS KOMPLEX	1		150504		(BBAG_KILIT_02) HAPPICH
46	6020600X	KİLİT KOMPLESİ merkezi kilit	LOCK ASSY central locking	SCHLOSS KOMPLEX	1		150504		(BBAG_KILIT_03) HAPPICH central lock

TEMSA	Yan kapaklar - standart kilit Side lids - standard lock Seiten deckeln	Group No : 28-041 Draw. Num. : x Rev. Date : Page : 1
	Vehicle Model: TB162Z, TB163Z,	

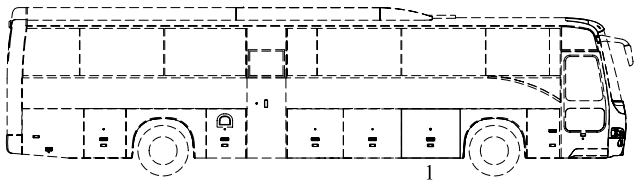

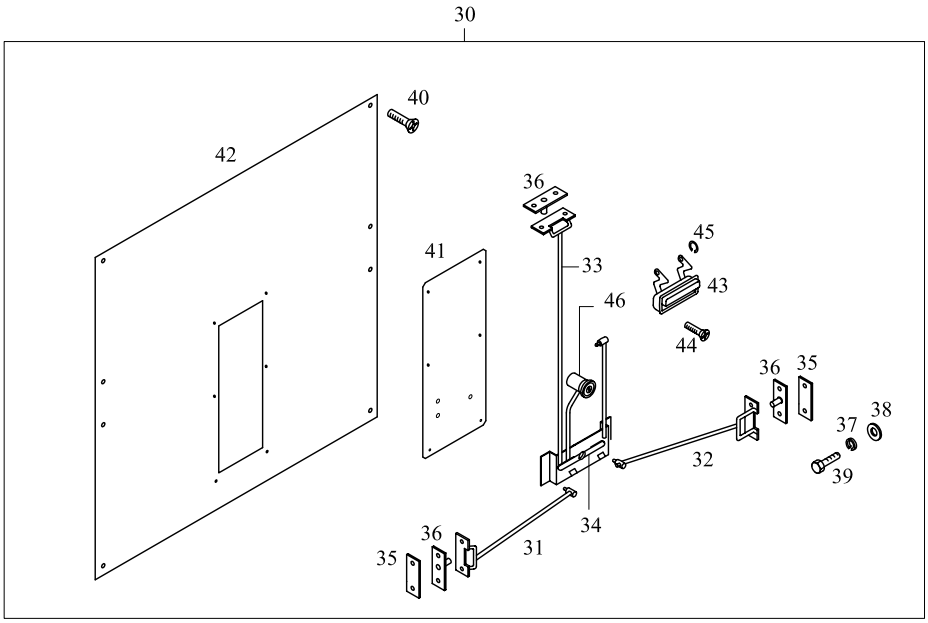

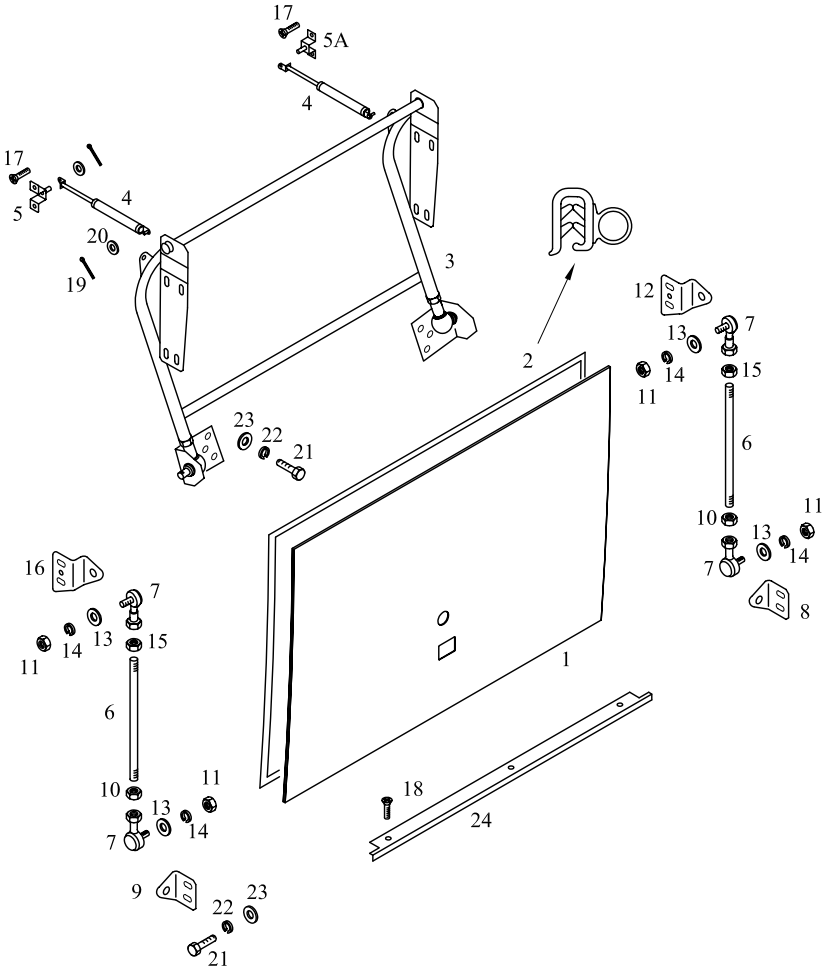

TEMSA	Yan kapak - standart kilit Side lid - standard lock Seiten deckeln	Drw.no 62102-97010-17Y Vehicle Model: **TB162Z** **TB163Z**	**28-041** RevDate: Page: 1

Pos	Part Number	Turkish	English	German	Qty	R/P	From	Up To	Original Number Supplier
1	62102-97550-70Y	YAN KAPAK	SIDE LID		1		1	150504	
1	62102-97550-70KY	YAN KAPAK	SIDE LID		1		150504		
2	TB112268Y	FİTİL	WEATHER STRIP		AR		1		
3	62102-97160-74Y	BAGAJ KOLU	ARM ASSY HINGE		1		1		
4	62102-70028-01Y	AMORTİSÖR	STAY DAMPER		2		1		
5	62102-11290-77Y	BRAKET	BRAKET		1		1		
5A	62102-70018-01Y	BRAKET	BRAKET		1		1		
6	62102-91570-00Y	ROD	ROD		2		1		
7	62102-61650-01Y	ROTIL	ROD END		2		1		
8	62102-91110-04Y	BRAKET	BRACKET		1		1		
9	62102-91110-05Y	BRAKET	BRACKET		1		1		
10	MS440031Y	SOMUN M10x1,25-5,6	NUT		AR		1		
11	MF430005PY	SOMUN M8	NUT		AR		1		
12	62102-91110-08Y	BRAKET	BRACKET		1		1		
13	MF450005PY	PUL	WASHER PLAIN		AR		1		
14	MF450405Y	RONDELA	WASHER SPRING		AR		1		
15	MF430006Y	SOMUN	NUT		AR		1		
16	62102-91110-12Y	BRAKET	BRACKET		1		1		
17	MC386109	VİDA	SCREW TAPPING		AR		1		
18	MF453615Y	VİDA	SCREW TAPPING		AR		1		
19	MF472037Y	KOPİLYA	PIN SPLIT		AR		1		
20	MF450154Y	PUL	WASHER PLAIN		AR		1		
21	MF100057Y	CIVATA M8*1.25*25	BOLT		AR		1		
22	MF450405Y	RONDELA	WASHER SPRING		AR		1		
23	MF450154Y	PUL	WASHER PLAIN		AR		1		
24	62102-81220-07Y	ALUMİNYUM ÇITA	PLATE EDGE		1		1		
30	62102-97500-70Y	KİLİT KOMPLE	LOCK ASSY		1		1		
31	62102-97510-80Y	KİLİT TELİ	CONNECTING ROD		1		1		
32	62102-97510-70Y	KİLİT TELİ	CONNECTING ROD		1		1		
33	62102-80510-83Y	KİLİT TELİ	CONNECTING ROD		1		1		
34	62102-80340-70Y	KİLİT MEKANİZMASI	LINK ASSY		1		1		
35	TU150136Y	ARA PARÇA	SHIM		2		1		
36	MC324121Y	TUTUCU	STRIKE ASSY		3		1		
37	MF450404Y	RONDELA	WASHER SPRING		AR		1		
38	MF450004Y	PUL	WASHER PLAIN		AR		1		

TEMSA	Yan kapak - standart kilit Side lid - standard lock Seiten deckeln	Drw.no 62102-97010-17Y Vehicle Model: **TB162Z** **TB163Z**	**28-041** RevDate: Page: 2

Pos	Part Number	Turkish	English	German	Qty	R/P	From	Up To	Original Number Supplier
39	MF100029Y	CIVATA M6*1*20	BOLT		AR		1		
40	MF453017X	VİDA	SCREW		AR		1		
41	62102-97510-01Y	PANEL	PANEL		1		1		
42	62102-97510-90Y	İÇ PANEL	PANEL INNER		1		1		
43	TC323896Y	TUTAMAK	HANDLE		AR		1		
44	MF453615PY	VİDA	SCREW		AR		1		
45	MF522401Y	SEGMAN	RING SNAP		AR		1		
46	62102-94200-01X	KİLİT	LOCK ASSY		AR		1		

TEMSA	Yan kapaklar - Happich kilit Side lids - Happich lock Seiten deckeln	Group No : 28-041.1 Draw. Num. : x Rev. Date : Page : 1
	Vehicle Model: TB162Z, TB163Z,	

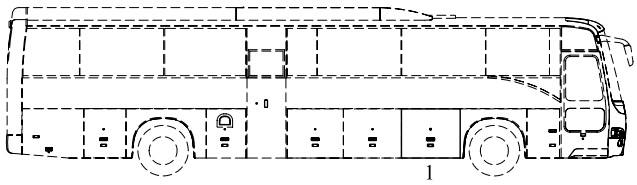

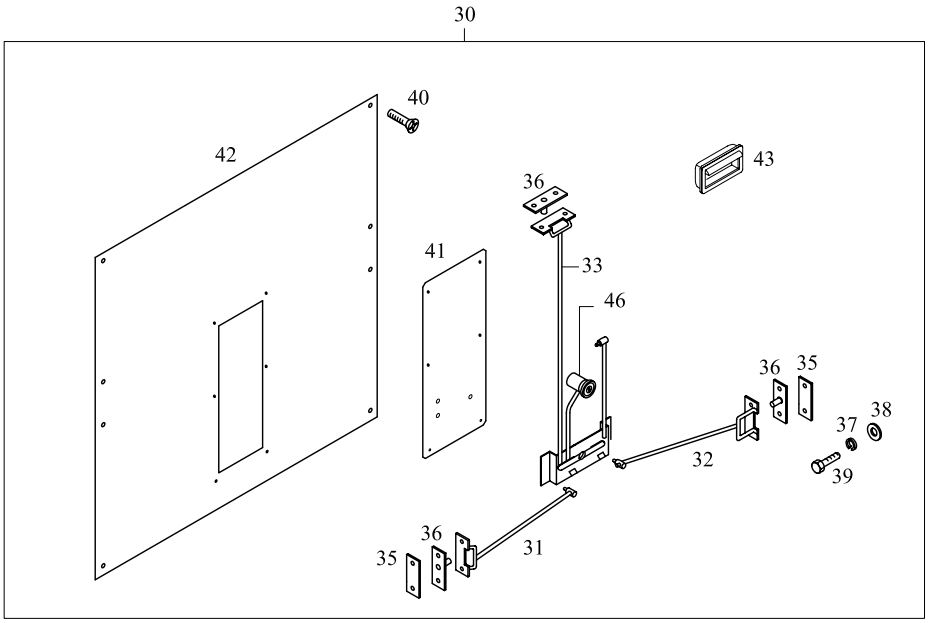

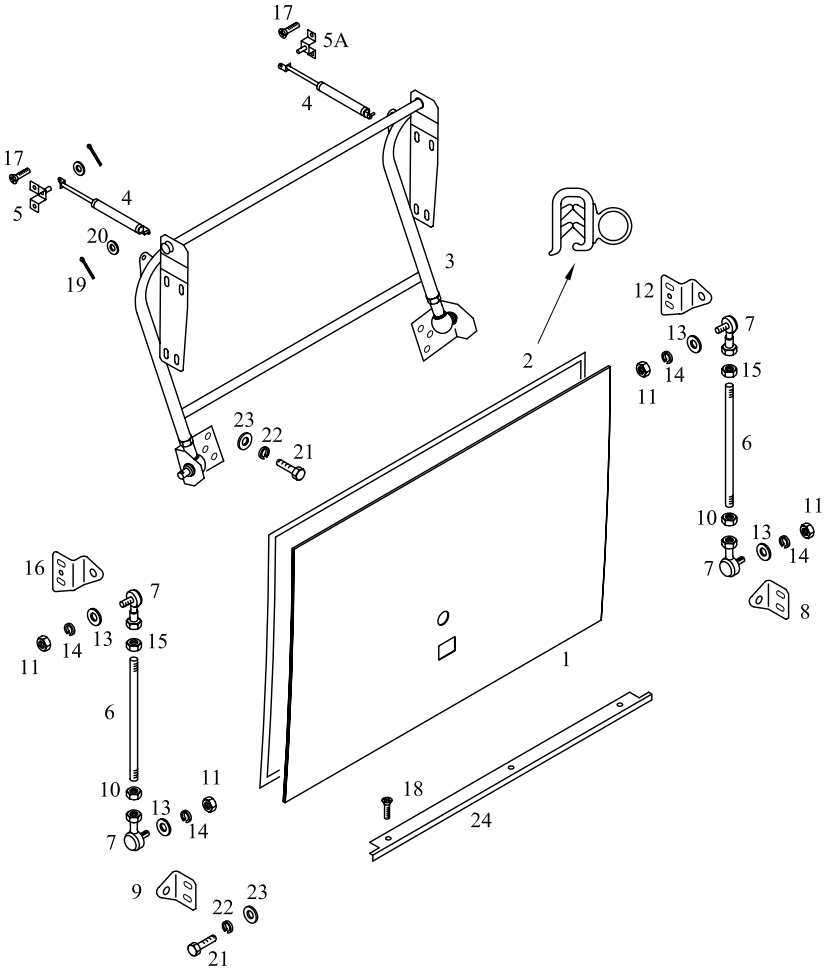

TEMSA	Yan kapak - Happich kilit Side lid - Happich lock Seiten deckeln	Drw.no 62102-97810-17Y Vehicle Model: **TB162Z** **TB163Z**	**28-041.1** RevDate: Page: 1

Pos	Part Number	Turkish	English	German	Qty	R/P	From	Up To	Original Number Supplier
1	62102-97750-70KY	YAN KAPAK	SIDE LID		1		150504		
2	TB112268Y	FİTİL	WEATHER STRIP		AR		1		
3	62102-97160-74Y	BAGAJ KOLU	ARM ASSY HINGE		1		1		
4	62102-70028-01Y	AMORTİSÖR	STAY DAMPER		2		1		
5	62102-11290-77Y	BRAKET	BRAKET		1		1		
5A	62102-70018-01Y	BRAKET	BRAKET		1		1		
6	62102-91570-00Y	ROD	ROD		2		1		
7	62102-61650-01Y	ROTIL	ROD END		2		1		
8	62102-91110-04Y	BRAKET	BRACKET		1		1		
9	62102-91110-05Y	BRAKET	BRACKET		1		1		
10	MS440031Y	SOMUN M10x1,25-5,6	NUT		AR		1		
11	MF430005PY	SOMUN M8	NUT		AR		1		
12	62102-91110-08Y	BRAKET	BRACKET		1		1		
13	MF450005PY	PUL	WASHER PLAIN		AR		1		
14	MF450405Y	RONDELA	WASHER SPRING		AR		1		
15	MF430006Y	SOMUN	NUT		AR		1		
16	62102-91110-12Y	BRAKET	BRACKET		1		1		
17	MC386109	VİDA	SCREW TAPPING		AR		1		
18	MF453615Y	VİDA	SCREW TAPPING		AR		1		
19	MF472037Y	KOPİLYA	PIN SPLIT		AR		1		
20	MF450154Y	PUL	WASHER PLAIN		AR		1		
21	MF100057Y	CIVATA M8*1.25*25	BOLT		AR		1		
22	MF450405Y	RONDELA	WASHER SPRING		AR		1		
23	MF450154Y	PUL	WASHER PLAIN		AR		1		
24	62102-81220-07Y	ALUMİNYUM ÇITA	PLATE EDGE		1		1		
30	62102-97700-70Y	KİLİT KOMPLE	LOCK ASSY		1		150504		
31	62102-97710-80Y	KİLİT TELİ	CONNECTING ROD		1		150504		
32	62102-97710-70Y	KİLİT TELİ	CONNECTING ROD		1		150504		
33	62102-87510-83Y	KİLİT TELİ	CONNECTING ROD		1		150504		
35	TU150136Y	ARA PARÇA	SHIM		2		1		
36	MC324121Y	TUTUCU	STRIKE ASSY		3		1		
37	MF450404Y	RONDELA	WASHER SPRING		AR		1		
38	MF450004Y	PUL	WASHER PLAIN		AR		1		
39	MF100029Y	CIVATA M6*1*20	BOLT		AR		1		
40	MF453017X	VİDA	SCREW		AR		1		

TEMSA	Yan kapak - Happich kilit Side lid - Happich lock Seiten deckeln	Drw.no 62102-97810-17Y Vehicle Model: **TB162Z** **TB163Z**	**28-041.1** RevDate: Page: 2

Pos	Part Number	Turkish	English	German	Qty	R/P	From	Up To	Original Number Supplier
41	62102-97710-01Y	PANEL	PANEL		1		150504		
42	62102-97710-90Y	İÇ PANEL	PANEL INNER		1		150504		
43	6020578X	TUTAMAK standart	HANDLE standard	HALTER	1		150504		(BBAG_KILIT_02) HAPPICH
43	6020571X	TUTAMAK merkezi kilit	HANDLE central locking	HALTER	1		150504		(BBAG_KILIT_03) HAPPICH central lock
46	6020601X	KİLİT KOMPLESİ standart	LOCK ASSY standard	SCHLOSS KOMPLEX	1		150504		(BBAG_KILIT_02) HAPPICH
46	6020600X	KİLİT KOMPLESİ merkezi kilit	LOCK ASSY central locking	SCHLOSS KOMPLEX	1		150504		(BBAG_KILIT_03) HAPPICH central lock

TEMSA	Yan kapaklar - standart kilit Side lids - standard lock Seiten deckeln	Group No : 28-042 Draw. Num. : x Rev. Date : Page : 1
	Vehicle Model: TB162Z, TB163Z,	

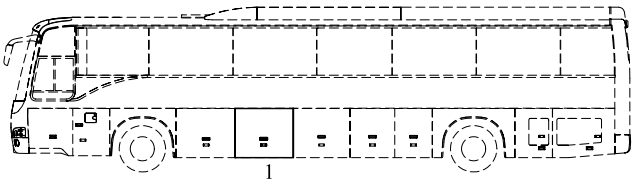

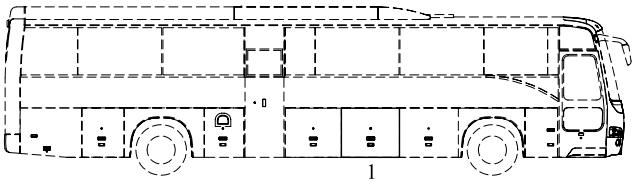

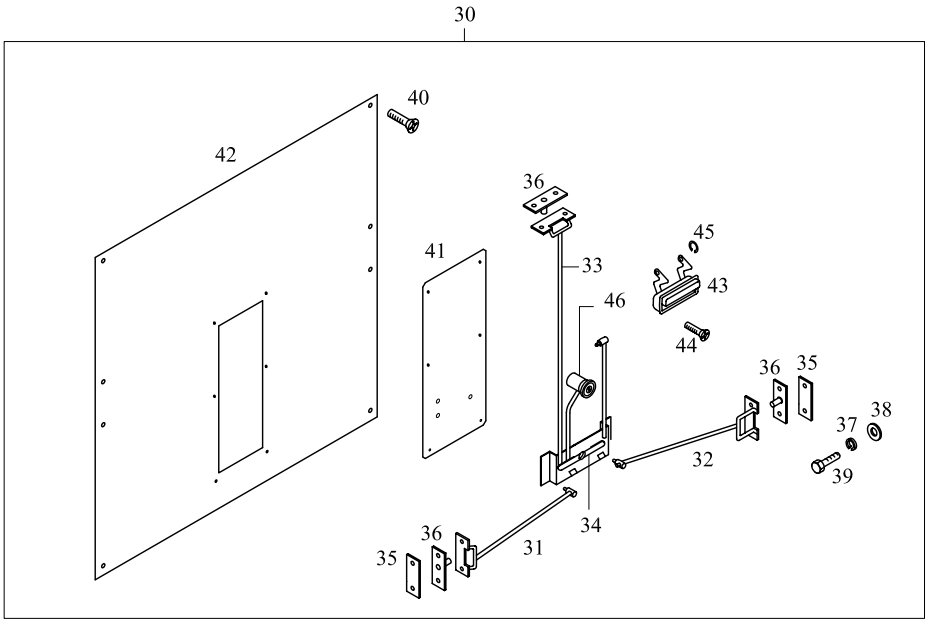

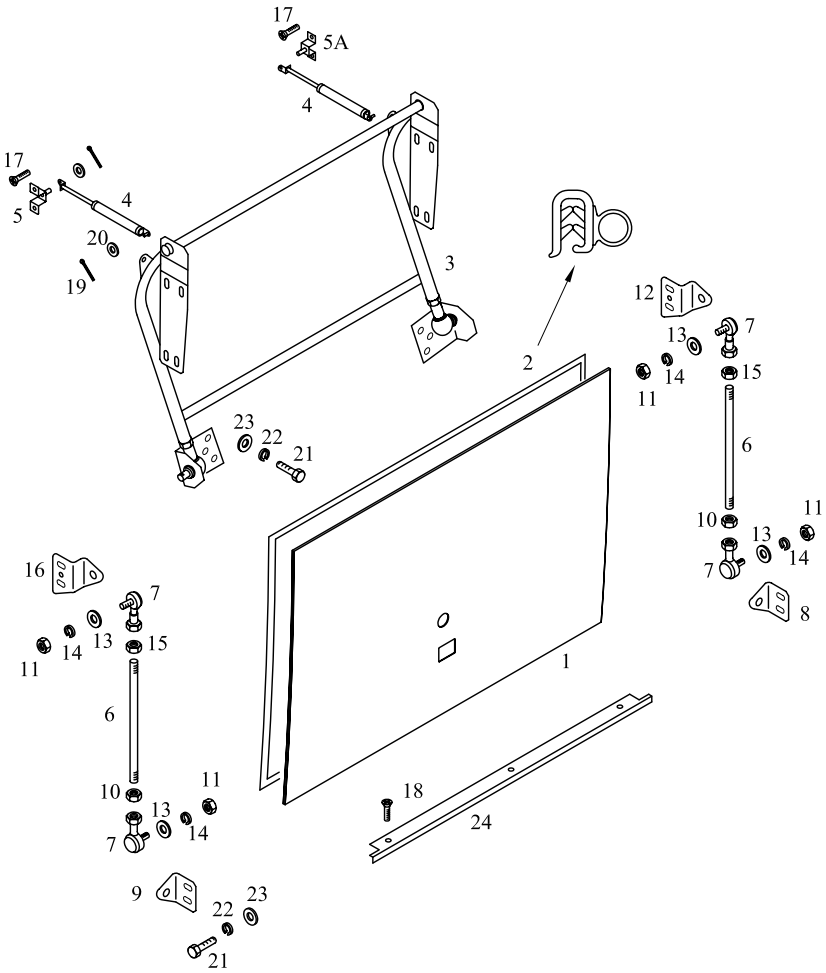

TEMSA	Yan kapak - standart kilit Side lid - standard lock Seiten deckeln	Drw.no 62102-97010-02Y Vehicle Model: **TB162Z** **TB163Z**	**28-042** RevDate: Page: 1

Pos	Part Number	Turkish	English	German	Qty	R/P	From	Up To	Original Number Supplier
1	62102-97550-70Y	YAN KAPAK	SIDE LID		1		1	150504	
1	62102-97550-70KY	YAN KAPAK	SIDE LID		1		150504		
2	TB112268Y	FİTİL	WEATHER STRIP		AR		1		
3	62102-97160-70Y	BAGAJ KOLU	ARM ASSY HINGE		1		1		
4	62102-70028-01Y	AMORTİSÖR	STAY DAMPER		2		1		
5	62102-11290-77Y	BRAKET	BRAKET		1		1		
5A	62102-70018-01Y	BRAKET	BRAKET		1		1		
6	62102-91570-00Y	ROD	ROD		2		1		
7	62102-61650-01Y	ROTIL	ROD END		2		1		
8	62102-91110-04Y	BRAKET	BRACKET		1		1		
9	62102-91110-05Y	BRAKET	BRACKET		1		1		
10	MS440031Y	SOMUN M10x1,25-5,6	NUT		AR		1		
11	MF430005PY	SOMUN M8	NUT		AR		1		
12	62102-91110-08Y	BRAKET	BRACKET		1		1		
13	MF450005PY	PUL	WASHER PLAIN		AR		1		
14	MF450405Y	RONDELA	WASHER SPRING		AR		1		
15	MF430006Y	SOMUN	NUT		AR		1		
16	62102-91110-12Y	BRAKET	BRACKET		1		1		
17	MC386109	VİDA	SCREW TAPPING		AR		1		
18	MF453615Y	VİDA	SCREW TAPPING		AR		1		
19	MF472037Y	KOPİLYA	PIN SPLIT		AR		1		
20	MF450154Y	PUL	WASHER PLAIN		AR		1		
21	MF100057Y	CIVATA M8*1.25*25	BOLT		AR		1		
22	MF450405Y	RONDELA	WASHER SPRING		AR		1		
23	MF450154Y	PUL	WASHER PLAIN		AR		1		
24	61714-97900-01Y	ALUMİNYUM ÇITA	PLATE EDGE		1		1		
30	62102-97500-70Y	KİLİT KOMPLE	LOCK ASSY		1		1		
31	62102-97510-80Y	KİLİT TELİ	CONNECTING ROD		1		1		
32	62102-97510-70Y	KİLİT TELİ	CONNECTING ROD		1		1		
33	62102-80510-83Y	KİLİT TELİ	CONNECTING ROD		1		1		
34	62102-80340-70Y	KİLİT MEKANİZMASI	LINK ASSY		1		1		
35	TU150136Y	ARA PARÇA	SHIM		2		1		
36	MC324121Y	TUTUCU	STRIKE ASSY		3		1		
37	MF450404Y	RONDELA	WASHER SPRING		AR		1		
38	MF450004Y	PUL	WASHER PLAIN		AR		1		

TEMSA	Yan kapak - standart kilit Side lid - standard lock Seiten deckeln	Drw.no 62102-97010-02Y Vehicle Model: **TB162Z** **TB163Z**	**28-042** RevDate: Page: 2

Pos	Part Number	Turkish	English	German	Qty	R/P	From	Up To	Original Number Supplier
39	MF100029Y	CIVATA M6*1*20	BOLT		AR		1		
40	MF453017X	VİDA	SCREW		AR		1		
41	62102-97510-01Y	PANEL	PANEL		1		1		
42	62102-97510-90Y	İÇ PANEL	PANEL INNER		1		1		
43	TC323896Y	TUTAMAK	HANDLE		AR		1		
44	MF453615PY	VİDA	SCREW		AR		1		
45	MF522401Y	SEGMAN	RING SNAP		AR		1		
46	62102-94200-01X	KİLİT	LOCK ASSY		AR		1		

TEMSA	Yan kapaklar - Happich kilit Side lids - Happich lock Seiten deckeln	Group No : 28-042.1 Draw. Num. : x Rev. Date : Page : 1
	Vehicle Model: TB162Z, TB163Z,	

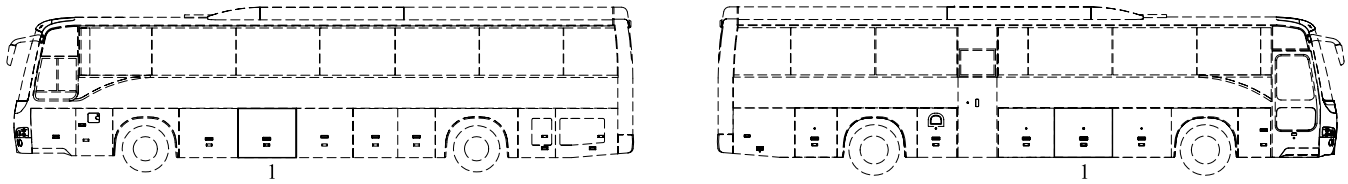

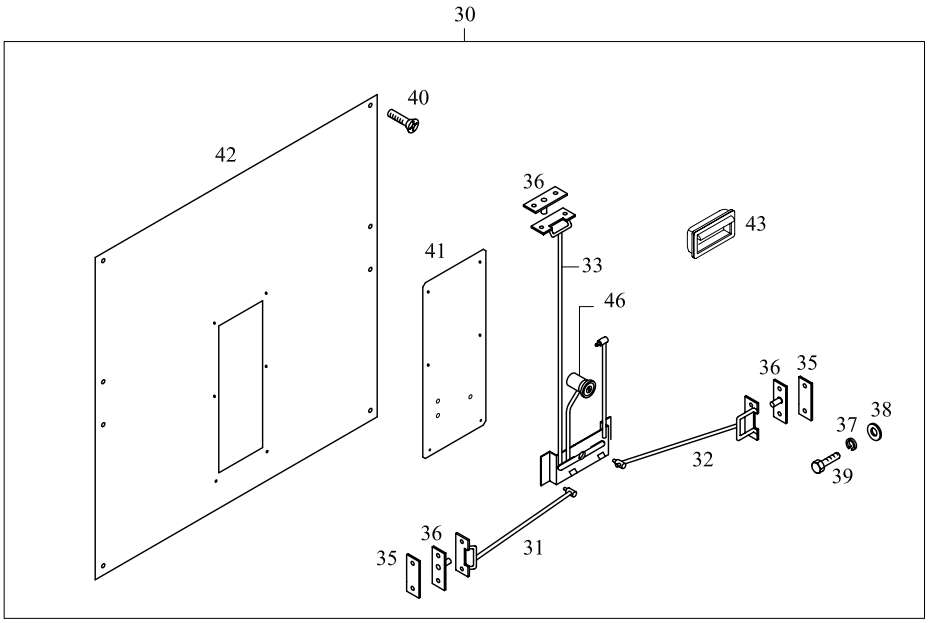

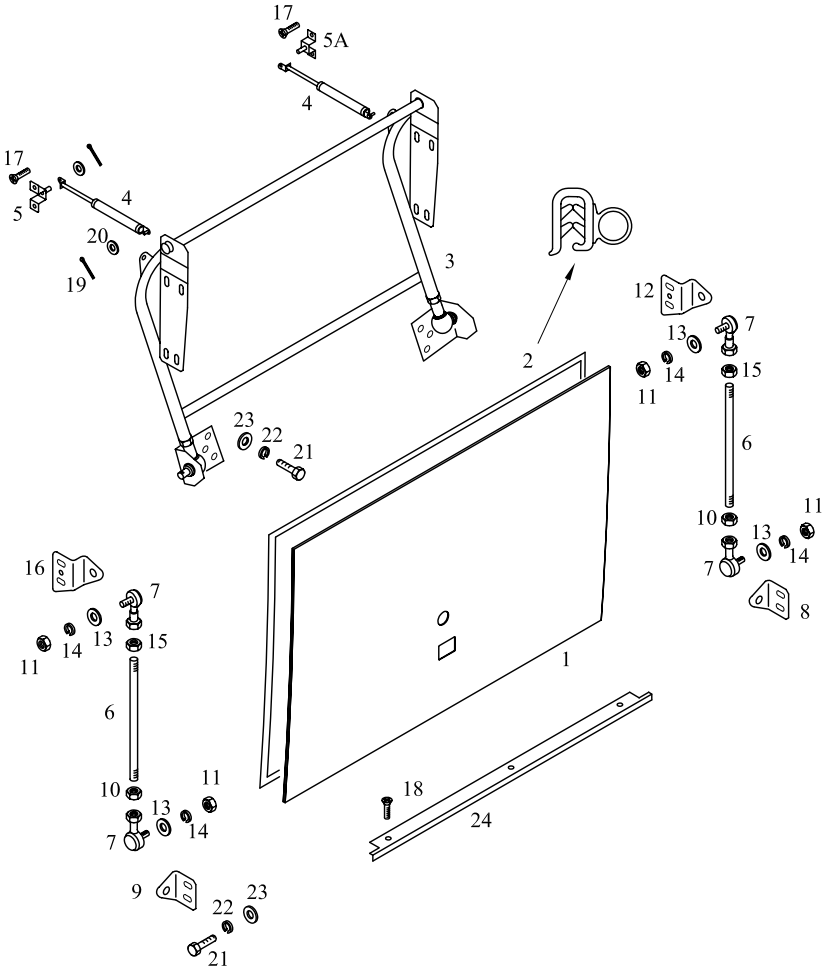

TEMSA	Yan kapak - Happich kilit Side lid - Happich lock Seiten deckeln	Drw.no 62102-97810-02Y Vehicle Model: **TB162Z** **TB163Z**	**28-042.1** RevDate: Page: 1

Pos	Part Number	Turkish	English	German	Qty	R/P	From	Up To	Original Number Supplier
1	62102-97750-70KY	YAN KAPAK	SIDE LID		1		150504		
2	TB112268Y	FİTİL	WEATHER STRIP		AR		1		
3	62102-97160-70Y	BAGAJ KOLU	ARM ASSY HINGE		1		1		
4	62102-70028-01Y	AMORTİSÖR	STAY DAMPER		2		1		
5	62102-11290-77Y	BRAKET	BRAKET		1		1		
5A	62102-70018-01Y	BRAKET	BRAKET		1		1		
6	62102-91570-00Y	ROD	ROD		2		1		
7	62102-61650-01Y	ROTIL	ROD END		2		1		
8	62102-91110-04Y	BRAKET	BRACKET		1		1		
9	62102-91110-05Y	BRAKET	BRACKET		1		1		
10	MS440031Y	SOMUN M10x1,25-5,6	NUT		AR		1		
11	MF430005PY	SOMUN M8	NUT		AR		1		
12	62102-91110-08Y	BRAKET	BRACKET		1		1		
13	MF450005PY	PUL	WASHER PLAIN		AR		1		
14	MF450405Y	RONDELA	WASHER SPRING		AR		1		
15	MF430006Y	SOMUN	NUT		AR		1		
16	62102-91110-12Y	BRAKET	BRACKET		1		1		
17	MC386109	VİDA	SCREW TAPPING		AR		1		
18	MF453615Y	VİDA	SCREW TAPPING		AR		1		
19	MF472037Y	KOPİLYA	PIN SPLIT		AR		1		
20	MF450154Y	PUL	WASHER PLAIN		AR		1		
21	MF100057Y	CIVATA M8*1.25*25	BOLT		AR		1		
22	MF450405Y	RONDELA	WASHER SPRING		AR		1		
23	MF450154Y	PUL	WASHER PLAIN		AR		1		
24	62102-81220-07Y	ALUMİNYUM ÇITA	PLATE EDGE		1		1		
30	62102-97700-70Y	KİLİT KOMPLE	LOCK ASSY		1		150504		
31	62102-97710-80Y	KİLİT TELİ	CONNECTING ROD		1		150504		
32	62102-97710-70Y	KİLİT TELİ	CONNECTING ROD		1		150504		
33	62102-87510-83Y	KİLİT TELİ	CONNECTING ROD		1		150504		
35	TU150136Y	ARA PARÇA	SHIM		2		1		
36	MC324121Y	TUTUCU	STRIKE ASSY		3		1		
37	MF450404Y	RONDELA	WASHER SPRING		AR		1		
38	MF450004Y	PUL	WASHER PLAIN		AR		1		
39	MF100029Y	CIVATA M6*1*20	BOLT		AR		1		
40	MF453017X	VİDA	SCREW		AR		1		

TEMSA	Yan kapak - Happich kilit Side lid - Happich lock Seiten deckeln	Drw.no Vehicle Model: **TB162Z** **TB163Z**	**28-042.1** RevDate: Page: 2

Pos	Part Number	Turkish	English	German	Qty	R/P	From	Up To	Original Number Supplier
41	62102-97710-01Y	PANEL	PANEL		1		150504		
42	62102-97710-90Y	İÇ PANEL	PANEL INNER		1		150504		
43	6020578X	TUTAMAK standart	HANDLE standard	HALTER	1		150504		(BBAG_KILIT_02) HAPPICH
43	6020571X	TUTAMAK merkezi kilit	HANDLE central locking	HALTER	1		150504		(BBAG_KILIT_03) HAPPICH central lock
46	6020601X	KİLİT KOMPLESİ standart	LOCK ASSY standard	SCHLOSS KOMPLEX	1		150504		(BBAG_KILIT_02) HAPPICH
46	6020600X	KİLİT KOMPLESİ merkezi kilit	LOCK ASSY central locking	SCHLOSS KOMPLEX	1		150504		(BBAG_KILIT_03) HAPPICH central lock

TEMSA	Yan kapaklar - standart kilit Side lids - standard lock Seiten deckeln	Group No : 28-043 Draw. Num. : x Rev. Date : Page : 1
	Vehicle Model: TB162Z, TB163Z,	

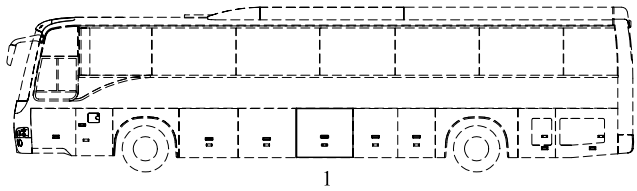

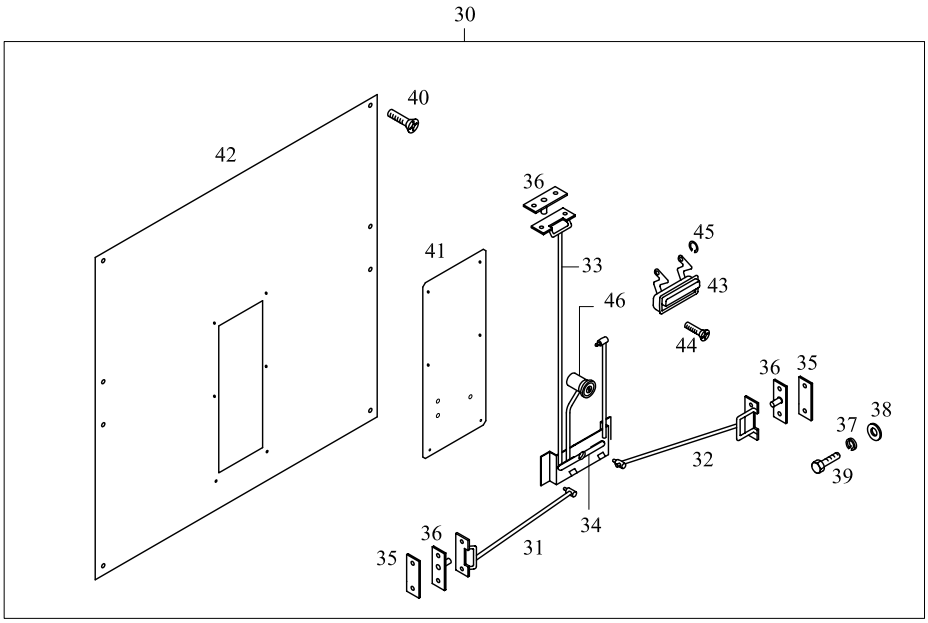

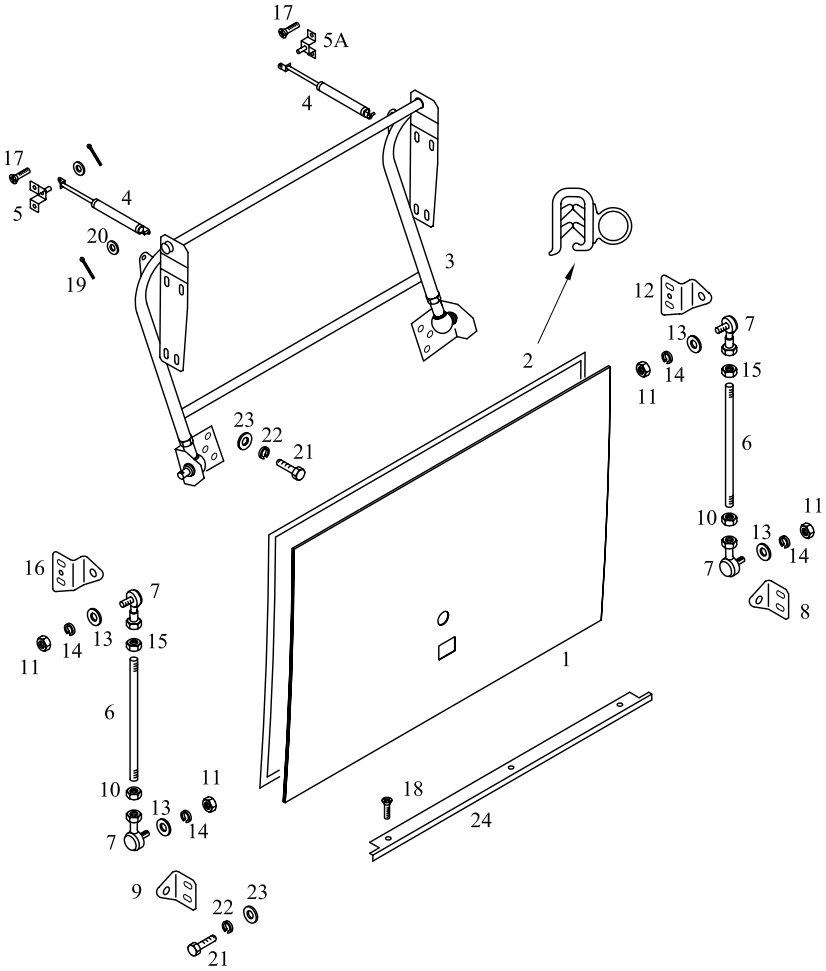

TEMSA	Yan kapak - standart kilit Side lid - standard lock Seiten deckeln	Drw.no 62102-97010-03Y Vehicle Model: **TB162Z** **TB163Z**	**28-043** RevDate: Page: 1

Pos	Part Number	Turkish	English	German	Qty	R/P	From	Up To	Original Number Supplier
1	62102-97550-71Y	YAN KAPAK	SIDE LID		1		1	150504	
1	62102-97550-71KY	YAN KAPAK	SIDE LID		1		150504		
2	TB112268Y	FİTİL	WEATHER STRIP		AR		1		
3	62102-97160-71Y	BAGAJ KOLU	ARM ASSY HINGE		1		1		
4	62102-70028-01Y	AMORTİSÖR	STAY DAMPER		2		1		
5	62102-11290-77Y	BRAKET	BRAKET		1		1		
5A	62102-70018-01Y	BRAKET	BRAKET		1		1		
6	62102-91570-00Y	ROD	ROD		2		1		
7	62102-61650-01Y	ROTIL	ROD END		2		1		
8	62102-91110-04Y	BRAKET	BRACKET		1		1		
9	62102-91110-05Y	BRAKET	BRACKET		1		1		
10	MS440031Y	SOMUN M10x1,25-5,6	NUT		AR		1		
11	MF430005PY	SOMUN M8	NUT		AR		1		
12	62102-91110-08Y	BRAKET	BRACKET		1		1		
13	MF450005PY	PUL	WASHER PLAIN		AR		1		
14	MF450405Y	RONDELA	WASHER SPRING		AR		1		
15	MF430006Y	SOMUN	NUT		AR		1		
16	62102-91110-12Y	BRAKET	BRACKET		1		1		
17	MC386109	VİDA	SCREW TAPPING		AR		1		
18	MF453615Y	VİDA	SCREW TAPPING		AR		1		
19	MF472037Y	KOPİLYA	PIN SPLIT		AR		1		
20	MF450154Y	PUL	WASHER PLAIN		AR		1		
21	MF100057Y	CIVATA M8*1.25*25	BOLT		AR		1		
22	MF450405Y	RONDELA	WASHER SPRING		AR		1		
23	MF450154Y	PUL	WASHER PLAIN		AR		1		
24	61714-97900-02Y	ALUMİNYUM ÇITA	PLATE EDGE		1		1		
30	62102-97500-71Y	KİLİT KOMPLE	LOCK ASSY		1		1		
31	62102-97510-81Y	KİLİT TELİ	CONNECTING ROD		1		1		
32	62102-97510-71Y	KİLİT TELİ	CONNECTING ROD		1		1		
33	62102-80510-83Y	KİLİT TELİ	CONNECTING ROD		1		1		
34	62102-80340-70Y	KİLİT MEKANİZMASI	LINK ASSY		1		1		
35	TU150136Y	ARA PARÇA	SHIM		2		1		
36	MC324121Y	TUTUCU	STRIKE ASSY		3		1		
37	MF450404Y	RONDELA	WASHER SPRING		AR		1		
38	MF450004Y	PUL	WASHER PLAIN		AR		1		

TEMSA	Yan kapak - standart kilit Side lid - standard lock Seiten deckeln	Drw.no Vehicle Model: **TB162Z** **TB163Z**	**28-043** RevDate: Page: 2

Pos	Part Number	Turkish	English	German	Qty	R/P	From	Up To	Original Number Supplier
39	MF100029Y	CIVATA M6*1*20	BOLT		AR		1		
40	MF453017X	VİDA	SCREW		AR		1		
41	62102-97510-01Y	PANEL	PANEL		1		1		
42	62102-97510-91Y	İÇ PANEL	PANEL INNER		1		1		
43	TC323896Y	TUTAMAK	HANDLE		AR		1		
44	MF453615PY	VİDA	SCREW		AR		1		
45	MF522401Y	SEGMAN	RING SNAP		AR		1		
46	62102-94200-01X	KİLİT	LOCK ASSY		AR		1		

TEMSA	Yan kapaklar - Happich kilit Side lids - Happich lock Seiten deckeln	Group No : 28-043.1 Draw. Num. : x Rev. Date : Page : 1
	Vehicle Model: TB162Z, TB163Z,	

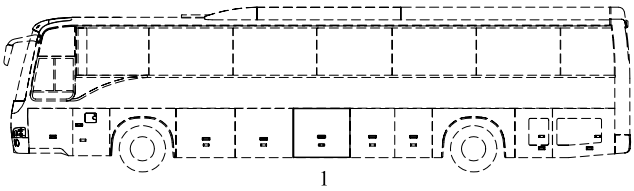

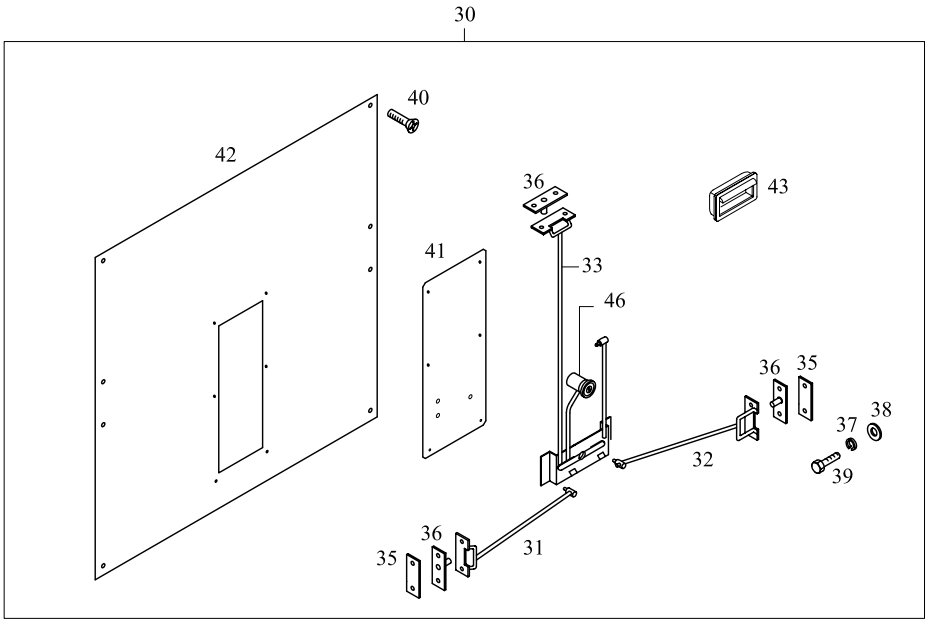

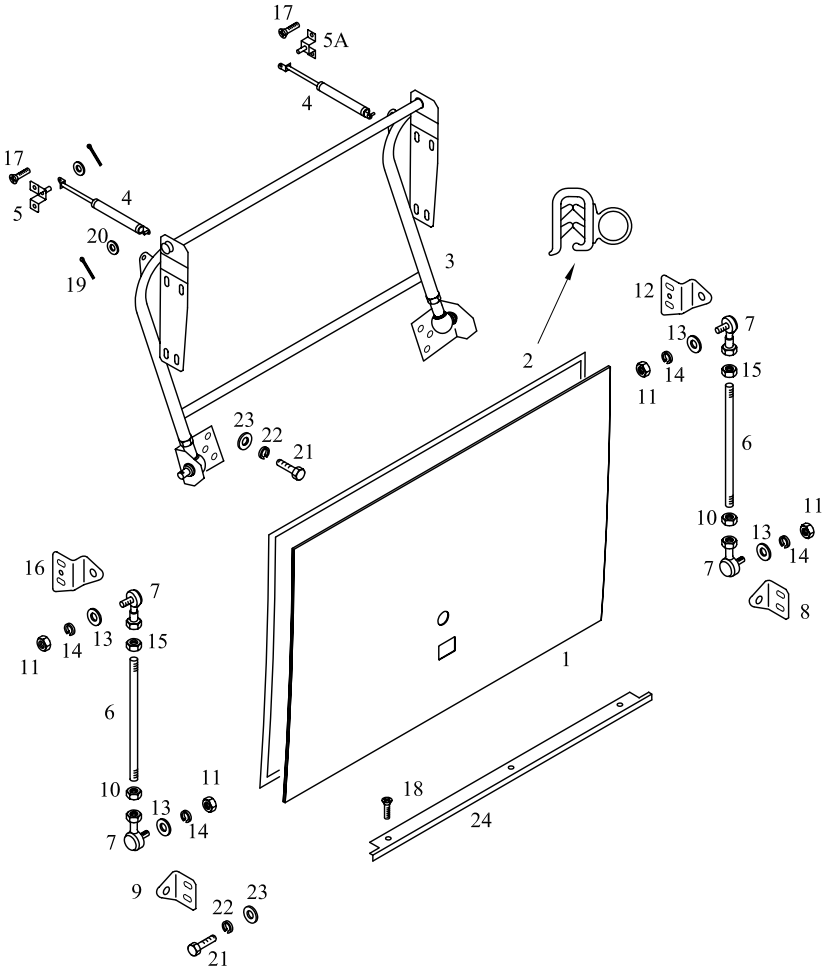

TEMSA	Yan kapak - Happich kilit Side lid - Happich lock Seiten deckeln	Drw.no 62102-97810-03Y Vehicle Model: **TB162Z** **TB163Z**	**28-043.1** RevDate: Page: 1

Pos	Part Number	Turkish	English	German	Qty	R/P	From	Up To	Original Number Supplier
1	62102-97750-71KY	YAN KAPAK	SIDE LID		1		150504		
2	TB112268Y	FİTİL	WEATHER STRIP		AR		1		
3	62102-97160-71Y	BAGAJ KOLU	ARM ASSY HINGE		1		1		
4	62102-70028-01Y	AMORTİSÖR	STAY DAMPER		2		1		
5	62102-11290-77Y	BRAKET	BRAKET		1		1		
5A	62102-70018-01Y	BRAKET	BRAKET		1		1		
6	62102-91570-00Y	ROD	ROD		2		1		
7	62102-61650-01Y	ROTIL	ROD END		2		1		
8	62102-91110-04Y	BRAKET	BRACKET		1		1		
9	62102-91110-05Y	BRAKET	BRACKET		1		1		
10	MS440031Y	SOMUN M10x1,25-5,6	NUT		AR		1		
11	MF430005PY	SOMUN M8	NUT		AR		1		
12	62102-91110-08Y	BRAKET	BRACKET		1		1		
13	MF450005PY	PUL	WASHER PLAIN		AR		1		
14	MF450405Y	RONDELA	WASHER SPRING		AR		1		
15	MF430006Y	SOMUN	NUT		AR		1		
16	62102-91110-12Y	BRAKET	BRACKET		1		1		
17	MC386109	VİDA	SCREW TAPPING		AR		1		
18	MF453615Y	VİDA	SCREW TAPPING		AR		1		
19	MF472037Y	KOPİLYA	PIN SPLIT		AR		1		
20	MF450154Y	PUL	WASHER PLAIN		AR		1		
21	MF100057Y	CIVATA M8*1.25*25	BOLT		AR		1		
22	MF450405Y	RONDELA	WASHER SPRING		AR		1		
23	MF450154Y	PUL	WASHER PLAIN		AR		1		
24	62102-81220-08Y	ALUMİNYUM ÇITA	PLATE EDGE		1		1		
30	62102-97700-71Y	KİLİT KOMPLE	LOCK ASSY		1		150504		
31	62102-97710-81Y	KİLİT TELİ	CONNECTING ROD		1		150504		
32	62102-97710-71Y	KİLİT TELİ	CONNECTING ROD		1		150504		
33	62102-87510-83Y	KİLİT TELİ	CONNECTING ROD		1		150504		
35	TU150136Y	ARA PARÇA	SHIM		2		1		
36	MC324121Y	TUTUCU	STRIKE ASSY		3		1		
37	MF450404Y	RONDELA	WASHER SPRING		AR		1		
38	MF450004Y	PUL	WASHER PLAIN		AR		1		
39	MF100029Y	CIVATA M6*1*20	BOLT		AR		1		
40	MF453017X	VİDA	SCREW		AR		1		

TEMSA	Yan kapak - Happich kilit Side lid - Happich lock Seiten deckeln	Drw.no Vehicle Model: **TB162Z** **TB163Z**	**28-043.1** RevDate: Page: 2

Pos	Part Number	Turkish	English	German	Qty	R/P	From	Up To	Original Number Supplier
41	62102-97710-01Y	PANEL	PANEL		1		150504		
42	62102-97710-91Y	İÇ PANEL	PANEL INNER		1		150504		
43	6020578X	TUTAMAK standart	HANDLE standard	HALTER	1		150504		(BBAG_KILIT_02) HAPPICH
43	6020571X	TUTAMAK merkezi kilit	HANDLE central locking	HALTER	1		150504		(BBAG_KILIT_03) HAPPICH central lock
46	6020601X	KİLİT KOMPLESİ standart	LOCK ASSY standard	SCHLOSS KOMPLEX	1		150504		(BBAG_KILIT_02) HAPPICH
46	6020600X	KİLİT KOMPLESİ merkezi kilit	LOCK ASSY central locking	SCHLOSS KOMPLEX	1		150504		(BBAG_KILIT_03) HAPPICH central lock

TEMSA	Yan kapaklar - standart kilit Side lids - standard lock Seiten deckeln	Group No : 28-044 Draw. Num. : x Rev. Date : Page : 1
	Vehicle Model: TB162Z, TB163Z,	

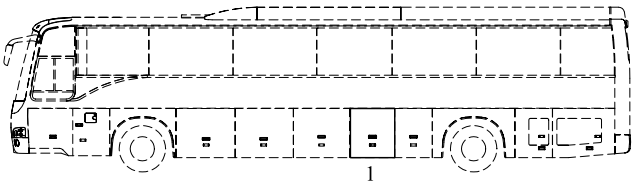

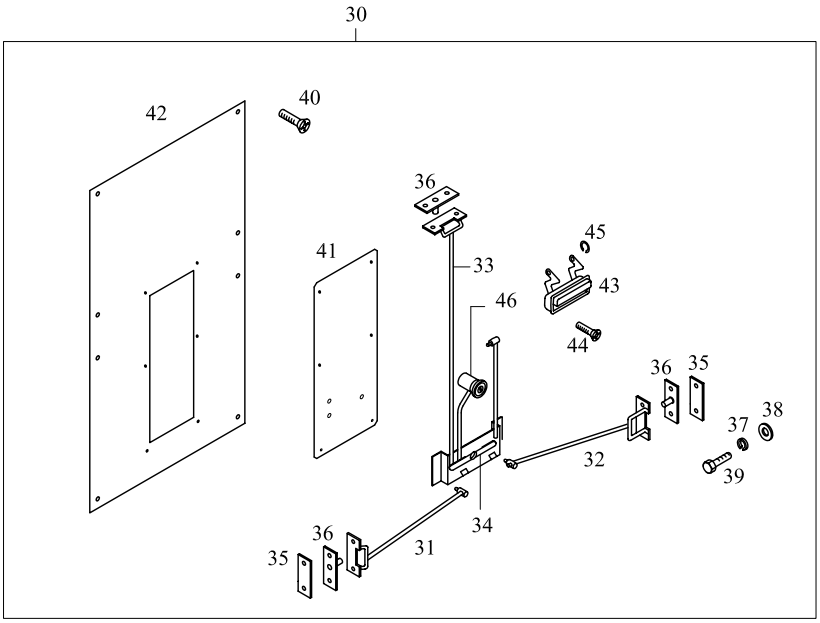

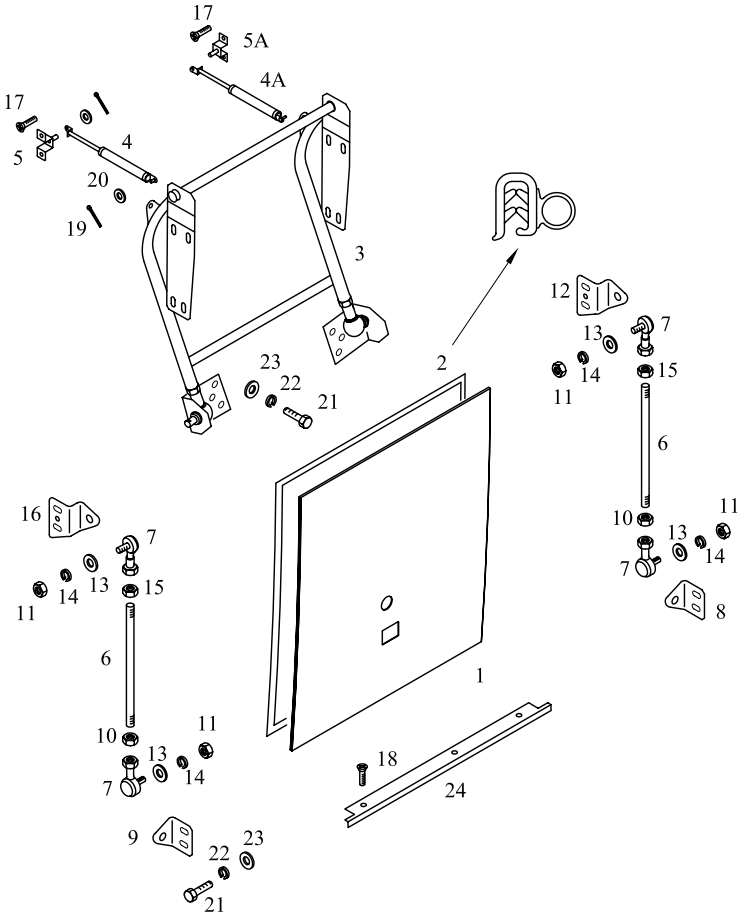

TEMSA	Yan kapak - standart kilit Side lid - standard lock Seiten deckeln	Drw.no Vehicle Model: **TB162Z** **TB163Z**	**28-044** RevDate: Page: 1

Pos	Part Number	Turkish	English	German	Qty	R/P	From	Up To	Original Number Supplier
1	62102-97550-72Y	YAN KAPAK	SIDE LID		1		1	150504	
1	62102-97550-72KY	YAN KAPAK	SIDE LID		1		150504		
2	TB112268Y	FİTİL	WEATHER STRIP		AR		1		
3	62102-97160-72Y	BAGAJ KOLU	ARM ASSY HINGE		1		1		
4	62102-70028-01Y	AMORTİSÖR	STAY DAMPER		1		1		
4A	62102-70028-02Y	AMORTİSÖR	STAY DAMPER		1		1		
5	62102-11290-77Y	BRAKET	BRAKET		1		1		
5A	62102-70018-01Y	BRAKET	BRAKET		1		1		
6	62102-91570-00Y	ROD	ROD		2		1		
7	62102-61650-01Y	ROTIL	ROD END		2		1		
8	62102-91110-04Y	BRAKET	BRACKET		1		1		
9	62102-91110-05Y	BRAKET	BRACKET		1		1		
10	MS440031Y	SOMUN M10x1,25-5,6	NUT		AR		1		
11	MF430005PY	SOMUN M8	NUT		AR		1		
12	62102-91110-08Y	BRAKET	BRACKET		1		1		
13	MF450005PY	PUL	WASHER PLAIN		AR		1		
14	MF450405Y	RONDELA	WASHER SPRING		AR		1		
15	MF430006Y	SOMUN	NUT		AR		1		
16	62102-91110-12Y	BRAKET	BRACKET		1		1		
17	MC386109	VİDA	SCREW TAPPING		AR		1		
18	MF453615Y	VİDA	SCREW TAPPING		AR		1		
19	MF472037Y	KOPİLYA	PIN SPLIT		AR		1		
20	MF450154Y	PUL	WASHER PLAIN		AR		1		
21	MF100057Y	CIVATA M8*1.25*25	BOLT		AR		1		
22	MF450405Y	RONDELA	WASHER SPRING		AR		1		
23	MF450154Y	PUL	WASHER PLAIN		AR		1		
24	62102-81220-09Y	ALUMİNYUM ÇITA	PLATE EDGE		1		1		
30	62102-97500-72Y	KİLİT KOMPLE	LOCK ASSY		1		1		
31	62102-97510-82Y	KİLİT TELİ	CONNECTING ROD		1		1		
32	62102-97510-72Y	KİLİT TELİ	CONNECTING ROD		1		1		
33	62102-80510-83Y	KİLİT TELİ	CONNECTING ROD		1		1		
34	62102-80340-70Y	KİLİT MEKANİZMASI	LINK ASSY		1		1		
35	TU150136Y	ARA PARÇA	SHIM		2		1		
36	MC324121Y	TUTUCU	STRIKE ASSY		3		1		
37	MF450404Y	RONDELA	WASHER SPRING		AR		1		

TEMSA	Yan kapak - standart kilit Side lid - standard lock Seiten deckeln	Drw.no 62102-97810-04Y Vehicle Model: **TB162Z** **TB163Z**	**28-044** RevDate: Page: 2

Pos	Part Number	Turkish	English	German	Qty	R/P	From	Up To	Original Number Supplier
38	MF450004Y	PUL	WASHER PLAIN		AR		1		
39	MF100029Y	CIVATA M6*1*20	BOLT		AR		1		
40	MF453017X	VİDA	SCREW		AR		1		
41	62102-97510-01Y	PANEL	PANEL		1		1		
42	62102-97510-92Y	İÇ PANEL	PANEL INNER		1		1		
43	TC323896Y	TUTAMAK	HANDLE		AR		1		
44	MF453615PY	VİDA	SCREW		AR		1		
45	MF522401Y	SEGMAN	RING SNAP		AR		1		
46	62102-94200-01X	KİLİT	LOCK ASSY		AR		1		

TEMSA	Yan kapaklar - Happich kilit Side lids - Happich lock Seiten deckeln	Group No : 28-044.1 Draw. Num. : x Rev. Date : Page : 1
	Vehicle Model: TB162Z, TB163Z,	

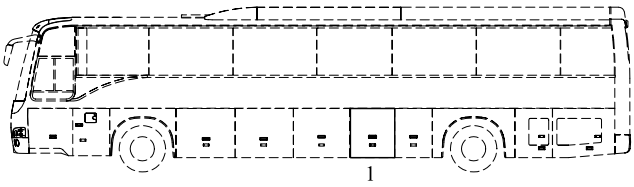

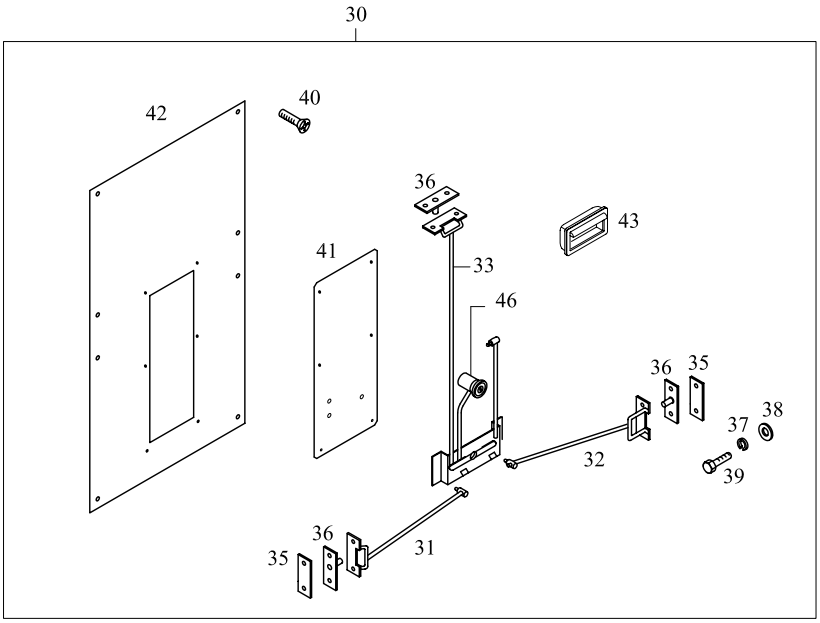

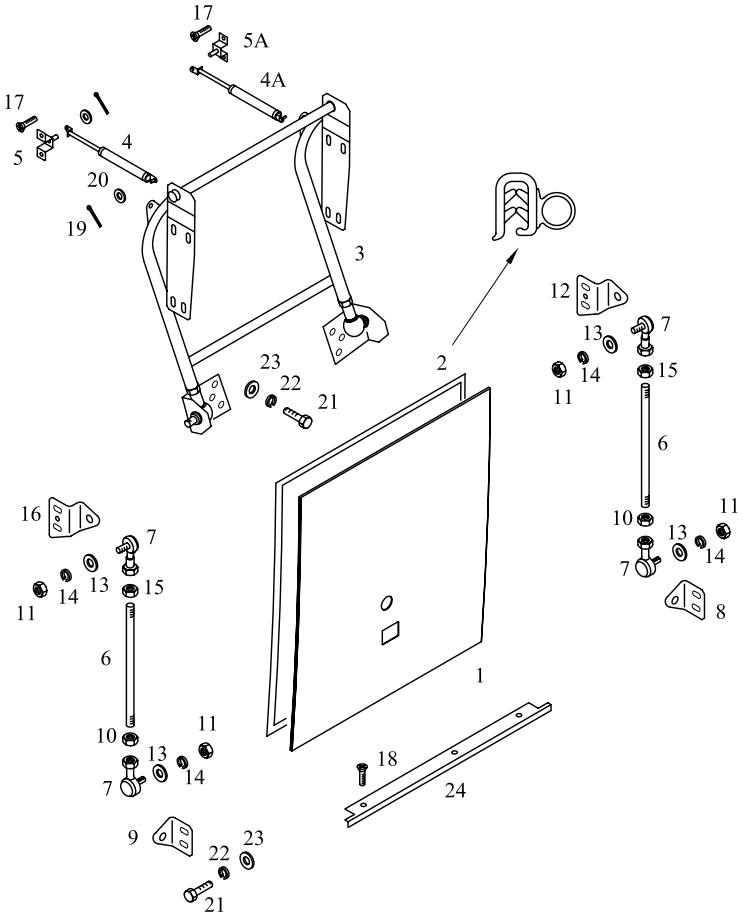

TEMSA	Yan kapak - Happich kilit Side lid - Happich lock Seiten deckeln	Drw.no 62102-97810-04Y Vehicle Model: **TB162Z** **TB163Z**	**28-044.1** RevDate: Page: 1

Pos	Part Number	Turkish	English	German	Qty	R/P	From	Up To	Original Number Supplier
1	62102-97750-72KY	YAN KAPAK	SIDE LID		1		150504		
2	TB112268Y	FİTİL	WEATHER STRIP		AR		1		
3	62102-97160-72Y	BAGAJ KOLU	ARM ASSY HINGE		1		1		
4	62102-70028-01Y	AMORTİSÖR	STAY DAMPER		2		1		
5	62102-11290-77Y	BRAKET	BRAKET		1		1		
5A	62102-70018-01Y	BRAKET	BRAKET		1		1		
6	62102-91570-00Y	ROD	ROD		2		1		
7	62102-61650-01Y	ROTIL	ROD END		2		1		
8	62102-91110-04Y	BRAKET	BRACKET		1		1		
9	62102-91110-05Y	BRAKET	BRACKET		1		1		
10	MS440031Y	SOMUN M10x1,25-5,6	NUT		AR		1		
11	MF430005PY	SOMUN M8	NUT		AR		1		
12	62102-91110-08Y	BRAKET	BRACKET		1		1		
13	MF450005PY	PUL	WASHER PLAIN		AR		1		
14	MF450405Y	RONDELA	WASHER SPRING		AR		1		
15	MF430006Y	SOMUN	NUT		AR		1		
16	62102-91110-12Y	BRAKET	BRACKET		1		1		
17	MC386109	VİDA	SCREW TAPPING		AR		1		
18	MF453615Y	VİDA	SCREW TAPPING		AR		1		
19	MF472037Y	KOPİLYA	PIN SPLIT		AR		1		
20	MF450154Y	PUL	WASHER PLAIN		AR		1		
21	MF100057Y	CIVATA M8*1.25*25	BOLT		AR		1		
22	MF450405Y	RONDELA	WASHER SPRING		AR		1		
23	MF450154Y	PUL	WASHER PLAIN		AR		1		
24	62102-81220-09Y	ALUMİNYUM ÇITA	PLATE EDGE		1		1		
30	62102-97700-72Y	KİLİT KOMPLE	LOCK ASSY		1		150504		
31	62102-97710-82Y	KİLİT TELİ	CONNECTING ROD		1		150504		
32	62102-97710-72Y	KİLİT TELİ	CONNECTING ROD		1		150504		
33	62102-87510-83Y	KİLİT TELİ	CONNECTING ROD		1		150504		
35	TU150136Y	ARA PARÇA	SHIM		2		1		
36	MC324121Y	TUTUCU	STRIKE ASSY		3		1		
37	MF450404Y	RONDELA	WASHER SPRING		AR		1		
38	MF450004Y	PUL	WASHER PLAIN		AR		1		
39	MF100029Y	CIVATA M6*1*20	BOLT		AR		1		
40	MF453017X	VİDA	SCREW		AR		1		

TEMSA	Yan kapak - Happich kilit Side lid - Happich lock Seiten deckeln	Drw.no Vehicle Model: **TB162Z** **TB163Z**	**28-044.1** RevDate: Page: 2

Pos	Part Number	Turkish	English	German	Qty	R/P	From	Up To	Original Number Supplier
41	62102-97710-01Y	PANEL	PANEL		1		150504		
42	62102-97710-92Y	İÇ PANEL	PANEL INNER		1		150504		
43	6020578X	TUTAMAK standart	HANDLE standard	HALTER	1		150504		(BBAG_KILIT_02) HAPPICH
43	6020571X	TUTAMAK merkezi kilit	HANDLE central locking	HALTER	1		150504		(BBAG_KILIT_03) HAPPICH central lock
46	6020601X	KİLİT KOMPLESİ standart	LOCK ASSY standard	SCHLOSS KOMPLEX	1		150504		(BBAG_KILIT_02) HAPPICH
46	6020600X	KİLİT KOMPLESİ merkezi kilit	LOCK ASSY central locking	SCHLOSS KOMPLEX	1		150504		(BBAG_KILIT_03) HAPPICH central lock

TEMSA	Yan kapaklar - standart kilit Side lids - standard lock Seiten deckeln	Group No : 28-045 Draw. Num. : x Rev. Date : Page : 1
	Vehicle Model: TB162Z, TB163Z,	

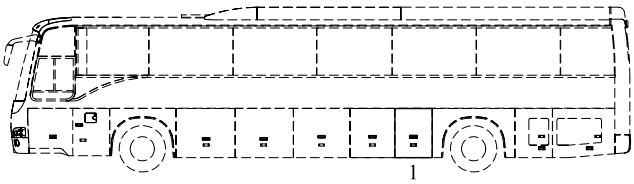

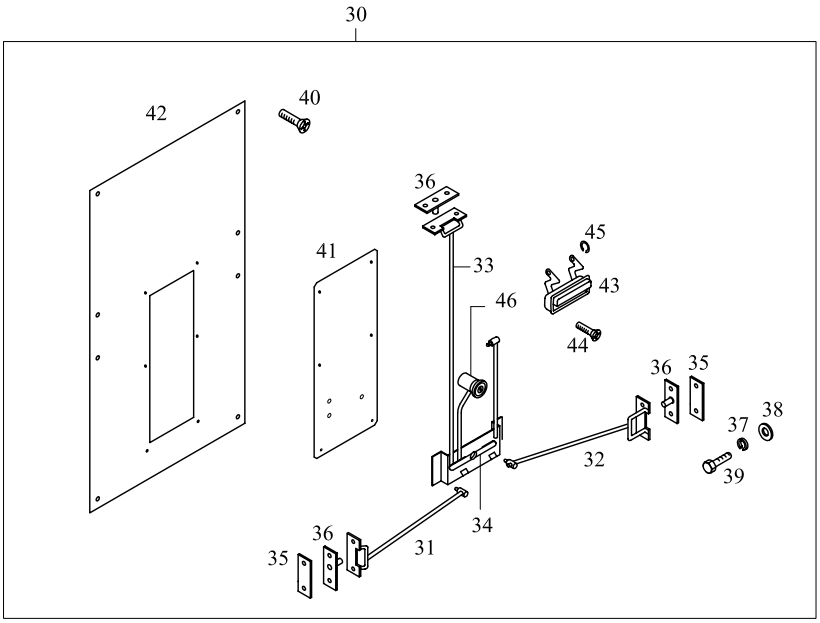

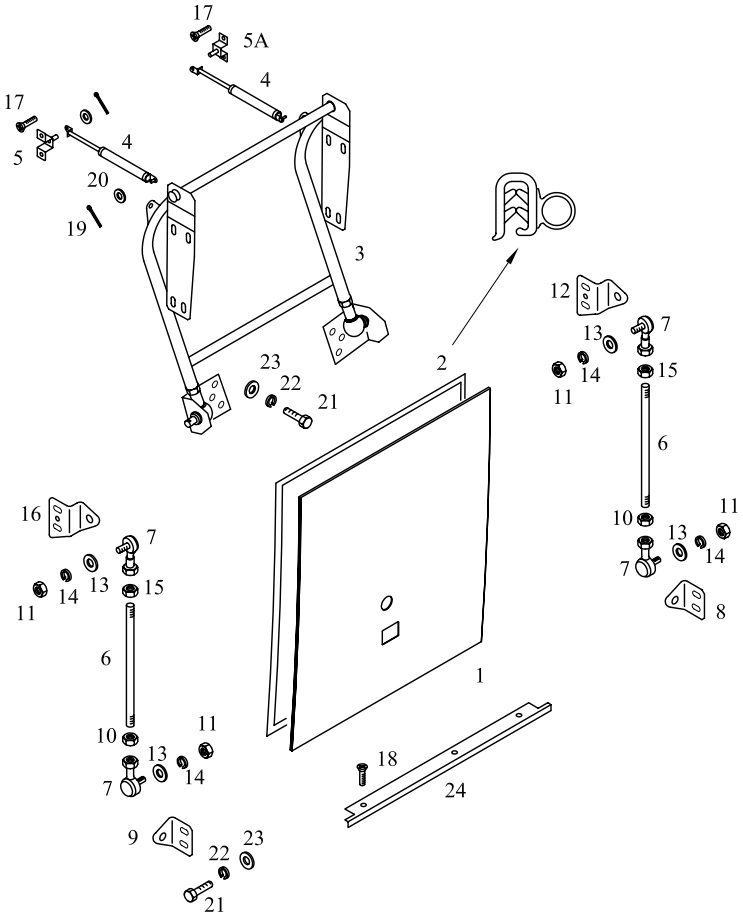

TEMSA	Yan kapak - standart kilit Side lid - standard lock Seiten deckeln	Drw.no 62102-97810-05Y Vehicle Model: **TB162Z** **TB163Z**	**28-045** RevDate: Page: 1

Pos	Part Number	Turkish	English	German	Qty	R/P	From	Up To	Original Number Supplier
1	62102-97550-73Y	YAN KAPAK	SIDE LID		1		1	150504	
1	62102-97550-73KY	YAN KAPAK	SIDE LID		1		150504		
2	TB112268Y	FİTİL	WEATHER STRIP		AR		1		
3	62102-97160-73Y	BAGAJ KOLU	ARM ASSY HINGE		1		1		
4	62102-70028-02Y	AMORTİSÖR	STAY DAMPER		2		1		
5	62102-11290-77Y	BRAKET	BRAKET		1		1		
5A	62102-70018-01Y	BRAKET	BRAKET		1		1		
6	62102-91570-00Y	ROD	ROD		2		1		
7	62102-61650-01Y	ROTIL	ROD END		2		1		
8	62102-91110-04Y	BRAKET	BRACKET		1		1		
9	62102-91110-05Y	BRAKET	BRACKET		1		1		
10	MS440031Y	SOMUN M10x1,25-5,6	NUT		AR		1		
11	MF430005PY	SOMUN M8	NUT		AR		1		
12	62102-91110-08Y	BRAKET	BRACKET		1		1		
13	MF450005PY	PUL	WASHER PLAIN		AR		1		
14	MF450405Y	RONDELA	WASHER SPRING		AR		1		
15	MF430006Y	SOMUN	NUT		AR		1		
16	62102-91110-12Y	BRAKET	BRACKET		1		1		
17	MC386109	VİDA	SCREW TAPPING		AR		1		
18	MF453615Y	VİDA	SCREW TAPPING		AR		1		
19	MF472037Y	KOPİLYA	PIN SPLIT		AR		1		
20	MF450154Y	PUL	WASHER PLAIN		AR		1		
21	MF100057Y	CIVATA M8*1.25*25	BOLT		AR		1		
22	MF450405Y	RONDELA	WASHER SPRING		AR		1		
23	MF450154Y	PUL	WASHER PLAIN		AR		1		
24	62102-81220-03Y	ALUMİNYUM ÇITA	PLATE EDGE		1		1		L:706mm
30	62102-97500-73Y	KİLİT KOMPLE	LOCK ASSY		1		1		
31	62102-97510-83Y	KİLİT TELİ	CONNECTING ROD		1		1		
32	62102-97510-73Y	KİLİT TELİ	CONNECTING ROD		1		1		
33	62102-80510-83Y	KİLİT TELİ	CONNECTING ROD		1		1		
34	62102-80340-70Y	KİLİT MEKANİZMASI	LINK ASSY		1		1		
35	TU150136Y	ARA PARÇA	SHIM		2		1		
36	MC324121Y	TUTUCU	STRIKE ASSY		3		1		
37	MF450404Y	RONDELA	WASHER SPRING		AR		1		
38	MF450004Y	PUL	WASHER PLAIN		AR		1		

TEMSA	Yan kapak - standart kilit Side lid - standard lock Seiten deckeln	Drw.no 62102-97810-05Y Vehicle Model: **TB162Z** **TB163Z**	**28-045** RevDate: Page: 1

Pos	Part Number	Turkish	English	German	Qty	R/P	From	Up To	Original Number Supplier
39	MF100029Y	CIVATA M6*1*20	BOLT		AR		1		
40	MF453017X	VİDA	SCREW		AR		1		
41	62102-97510-01Y	PANEL	PANEL		1		1		
42	62102-97510-93Y	İÇ PANEL	PANEL INNER		1		1		
43	TC323896Y	TUTAMAK	HANDLE		AR		1		
44	MF453615PY	VİDA	SCREW		AR		1		
45	MF522401Y	SEGMAN	RING SNAP		AR		1		
46	62102-94200-01X	KİLİT	LOCK ASSY		AR		1		

TEMSA	Yan kapaklar - Happich kilit Side lids - Happich lock Seiten deckeln	Group No : 28-045.1 Draw. Num. : x Rev. Date : Page : 1
	Vehicle Model: TB162Z, TB163Z,	

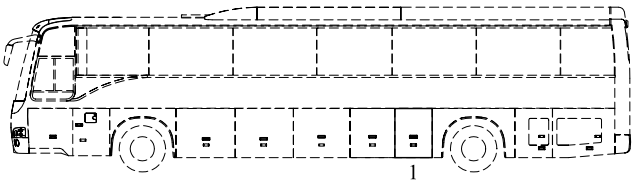

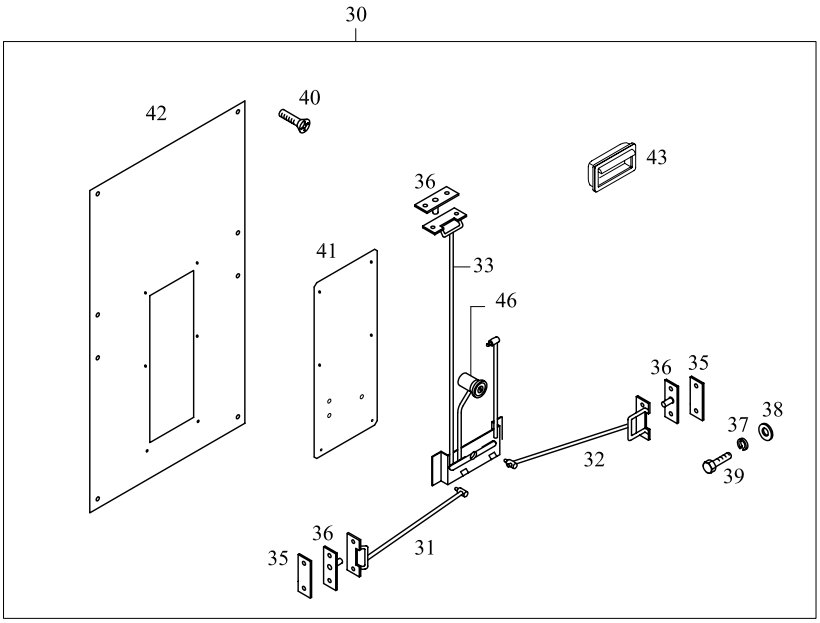

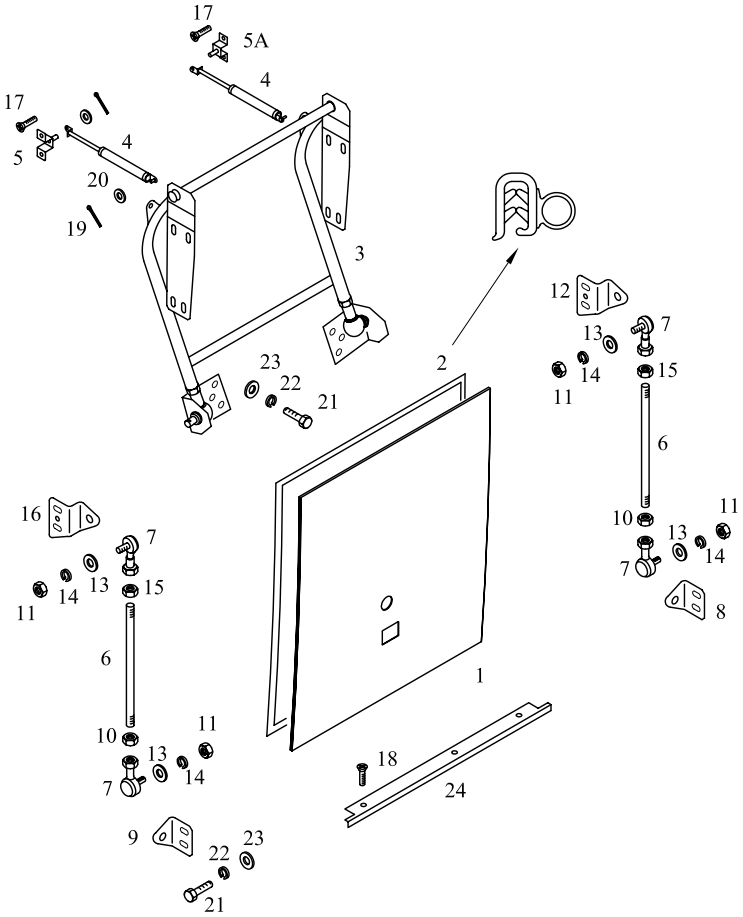

TEMSA	Yan kapak - Happich kilit Side lid - Happich lock Seiten deckeln	Drw.no 62102-97810-05Y Vehicle Model: **TB162Z** **TB163Z**	**28-045.1** RevDate: Page: 1

Pos	Part Number	Turkish	English	German	Qty	R/P	From	Up To	Original Number Supplier
1	62102-97750-73KY	YAN KAPAK	SIDE LID		1		150504		
2	TB112268Y	FİTİL	WEATHER STRIP		AR		1		
3	62102-97160-73Y	BAGAJ KOLU	ARM ASSY HINGE		1		1		
4	62102-70028-01Y	AMORTİSÖR	STAY DAMPER		2		1		
5	62102-11290-77Y	BRAKET	BRAKET		1		1		
5A	62102-70018-01Y	BRAKET	BRAKET		1		1		
6	62102-91570-00Y	ROD	ROD		2		1		
7	62102-61650-01Y	ROTIL	ROD END		2		1		
8	62102-91110-04Y	BRAKET	BRACKET		1		1		
9	62102-91110-05Y	BRAKET	BRACKET		1		1		
10	MS440031Y	SOMUN M10x1,25-5,6	NUT		AR		1		
11	MF430005PY	SOMUN M8	NUT		AR		1		
12	62102-91110-08Y	BRAKET	BRACKET		1		1		
13	MF450005PY	PUL	WASHER PLAIN		AR		1		
14	MF450405Y	RONDELA	WASHER SPRING		AR		1		
15	MF430006Y	SOMUN	NUT		AR		1		
16	62102-91110-12Y	BRAKET	BRACKET		1		1		
17	MC386109	VİDA	SCREW TAPPING		AR		1		
18	MF453615Y	VİDA	SCREW TAPPING		AR		1		
19	MF472037Y	KOPİLYA	PIN SPLIT		AR		1		
20	MF450154Y	PUL	WASHER PLAIN		AR		1		
21	MF100057Y	CIVATA M8*1.25*25	BOLT		AR		1		
22	MF450405Y	RONDELA	WASHER SPRING		AR		1		
23	MF450154Y	PUL	WASHER PLAIN		AR		1		
24	62102-81220-03Y	ALUMİNYUM ÇITA	PLATE EDGE		1		1		
30	62102-97700-73Y	KİLİT KOMPLE	LOCK ASSY		1		150504		
31	62102-97710-83Y	KİLİT TELİ	CONNECTING ROD		1		150504		
32	62102-97710-73Y	KİLİT TELİ	CONNECTING ROD		1		150504		
33	62102-87510-83Y	KİLİT TELİ	CONNECTING ROD		1		150504		
35	TU150136Y	ARA PARÇA	SHIM		2		1		
36	MC324121Y	TUTUCU	STRIKE ASSY		3		1		
37	MF450404Y	RONDELA	WASHER SPRING		AR		1		
38	MF450004Y	PUL	WASHER PLAIN		AR		1		
39	MF100029Y	CIVATA M6*1*20	BOLT		AR		1		
40	MF453017X	VİDA	SCREW		AR		1		

TEMSA	Yan kapak - Happich kilit Side lid - Happich lock Seiten deckeln	Drw.no Vehicle Model: **TB162Z** **TB163Z**	**28-045.1** RevDate: Page: 2

Pos	Part Number	Turkish	English	German	Qty	R/P	From	Up To	Original Number Supplier
41	62102-97710-01Y	PANEL	PANEL		1		150504		
42	62102-97710-93Y	İÇ PANEL	PANEL INNER		1		150504		
43	6020578X	TUTAMAK standart	HANDLE standard	HALTER	1		150504		(BBAG_KILIT_02) HAPPICH
43	6020571X	TUTAMAK merkezi kilit	HANDLE central locking	HALTER	1		150504		(BBAG_KILIT_03) HAPPICH central lock
46	6020601X	KİLİT KOMPLESİ standart	LOCK ASSY standard	SCHLOSS KOMPLEX	1		150504		(BBAG_KILIT_02) HAPPICH
46	6020600X	KİLİT KOMPLESİ merkezi kilit	LOCK ASSY central locking	SCHLOSS KOMPLEX	1		150504		(BBAG_KILIT_03) HAPPICH central lock

TEMSA	Yan kapaklar - standart kilit Side lids - standard lock Seiten deckeln	Group No : 28-046 Draw. Num. : x Rev. Date : Page : 1
	Vehicle Model: TB162Z, TB163Z,	

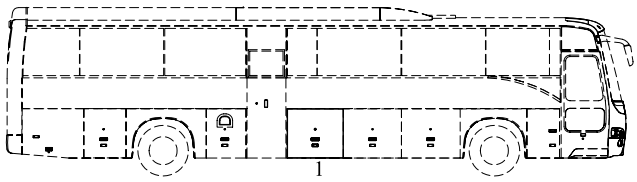

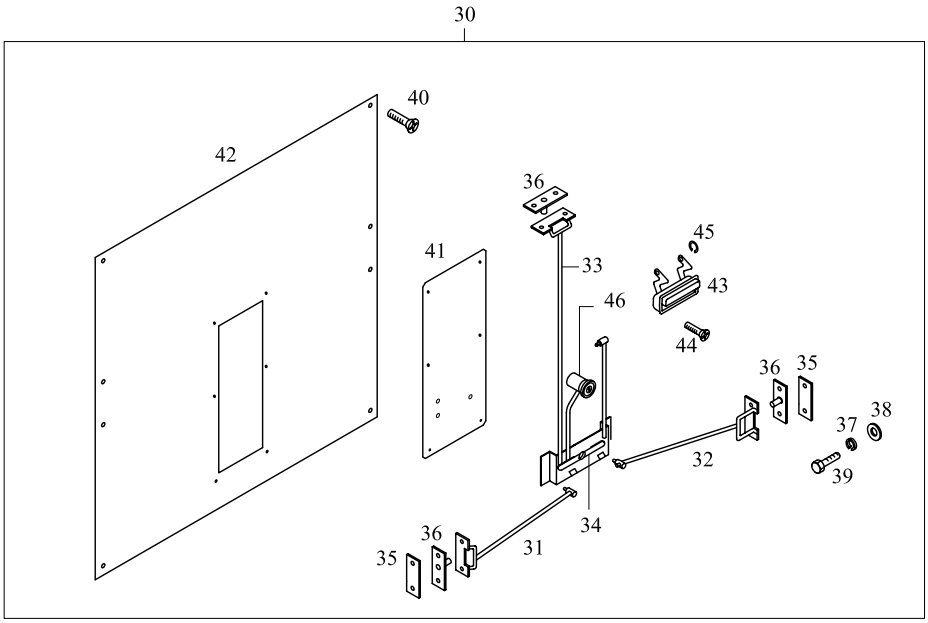

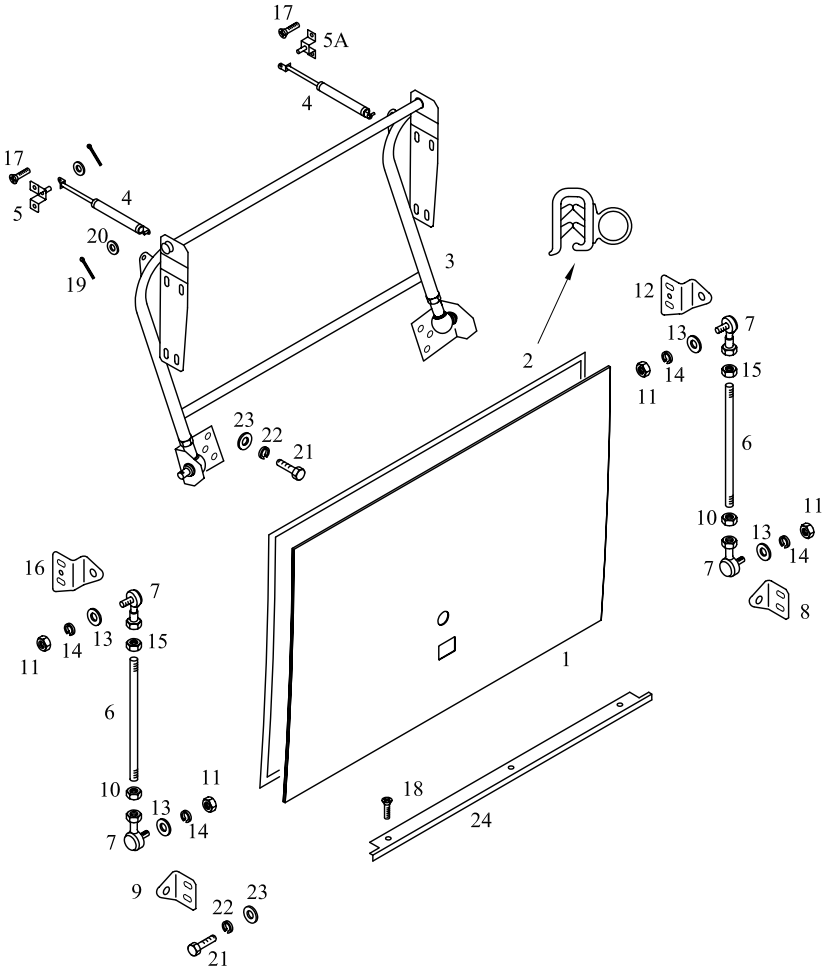

TEMSA	Yan kapak - standart kilit Side lid - standard lock Seiten deckeln	Drw.no 62102-97010-06Y Vehicle Model: **TB162Z** **TB163Z**	**28-046** RevDate: Page: 1

Pos	Part Number	Turkish	English	German	Qty	R/P	From	Up To	Original Number Supplier
1	62102-97550-74Y	YAN KAPAK	SIDE LID		1		1	150504	
1	62102-97550-74KY	YAN KAPAK	SIDE LID		1		150504		
2	TB112268Y	FİTİL	WEATHER STRIP		AR		1		
3	62102-97160-71Y	BAGAJ KOLU	ARM ASSY HINGE		1		1		
4	62102-70028-01Y	AMORTİSÖR	STAY DAMPER		2		1		
5	62102-11290-77Y	BRAKET	BRAKET		1		1		
5A	62102-70018-01Y	BRAKET	BRAKET		1		1		
6	62102-91570-00Y	ROD	ROD		2		1		
7	62102-61650-01Y	ROTIL	ROD END		2		1		
8	62102-91110-04Y	BRAKET	BRACKET		1		1		
9	62102-91110-05Y	BRAKET	BRACKET		1		1		
10	MS440031Y	SOMUN M10x1,25-5,6	NUT		AR		1		
11	MF430005PY	SOMUN M8	NUT		AR		1		
12	62102-91110-08Y	BRAKET	BRACKET		1		1		
13	MF450005PY	PUL	WASHER PLAIN		AR		1		
14	MF450405Y	RONDELA	WASHER SPRING		AR		1		
15	MF430006Y	SOMUN	NUT		AR		1		
16	62102-91110-12Y	BRAKET	BRACKET		1		1		
17	MC386109	VİDA	SCREW TAPPING		AR		1		
18	MF453615Y	VİDA	SCREW TAPPING		AR		1		
19	MF472037Y	KOPİLYA	PIN SPLIT		AR		1		
20	MF450154Y	PUL	WASHER PLAIN		AR		1		
21	MF100057Y	CIVATA M8*1.25*25	BOLT		AR		1		
22	MF450405Y	RONDELA	WASHER SPRING		AR		1		
23	MF450154Y	PUL	WASHER PLAIN		AR		1		
24	61714-97900-02Y	ALUMİNYUM ÇITA	PLATE EDGE		1		1		
30	62102-97500-74Y	KİLİT KOMPLE	LOCK ASSY		1		1		
31	62102-97510-74Y	KİLİT TELİ	CONNECTING ROD		1		1		
32	62102-97510-84Y	KİLİT TELİ	CONNECTING ROD		1		1		
33	62102-80510-83Y	KİLİT TELİ	CONNECTING ROD		1		1		
34	62102-80340-70Y	KİLİT MEKANİZMASI	LINK ASSY		1		1		
35	TU150136Y	ARA PARÇA	SHIM		2		1		
36	MC324121Y	TUTUCU	STRIKE ASSY		3		1		
37	MF450404Y	RONDELA	WASHER SPRING		AR		1		
38	MF450004Y	PUL	WASHER PLAIN		AR		1		

TEMSA	Yan kapak - standart kilit Side lid - standard lock Seiten deckeln	Drw.no 62102-97010-06Y Vehicle Model: **TB162Z** **TB163Z**	**28-046** RevDate: Page: 2

Pos	Part Number	Turkish	English	German	Qty	R/P	From	Up To	Original Number Supplier
39	MF100029Y	CIVATA M6*1*20	BOLT		AR		1		
40	MF453017X	VİDA	SCREW		AR		1		
41	62102-97510-01Y	PANEL	PANEL		1		1		
42	62102-97510-94Y	İÇ PANEL	PANEL INNER		1		1		
43	TC323896Y	TUTAMAK	HANDLE		AR		1		
44	MF453615PY	VİDA	SCREW		AR		1		
45	MF522401Y	SEGMAN	RING SNAP		AR		1		
46	62102-94200-01X	KİLİT	LOCK ASSY		AR		1		

TEMSA	Yan kapaklar - Happich kilit Side lids - Happich lock Seiten deckeln	Group No : 28-046.1 Draw. Num. : x Rev. Date : Page : 1
	Vehicle Model: TB162Z, TB163Z,	

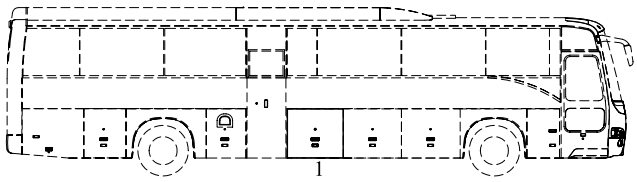

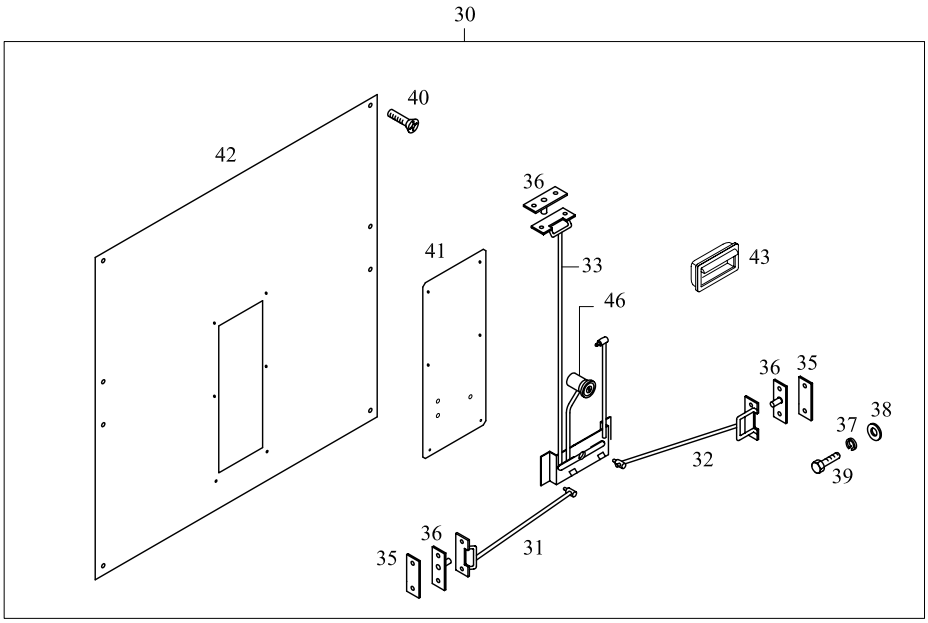

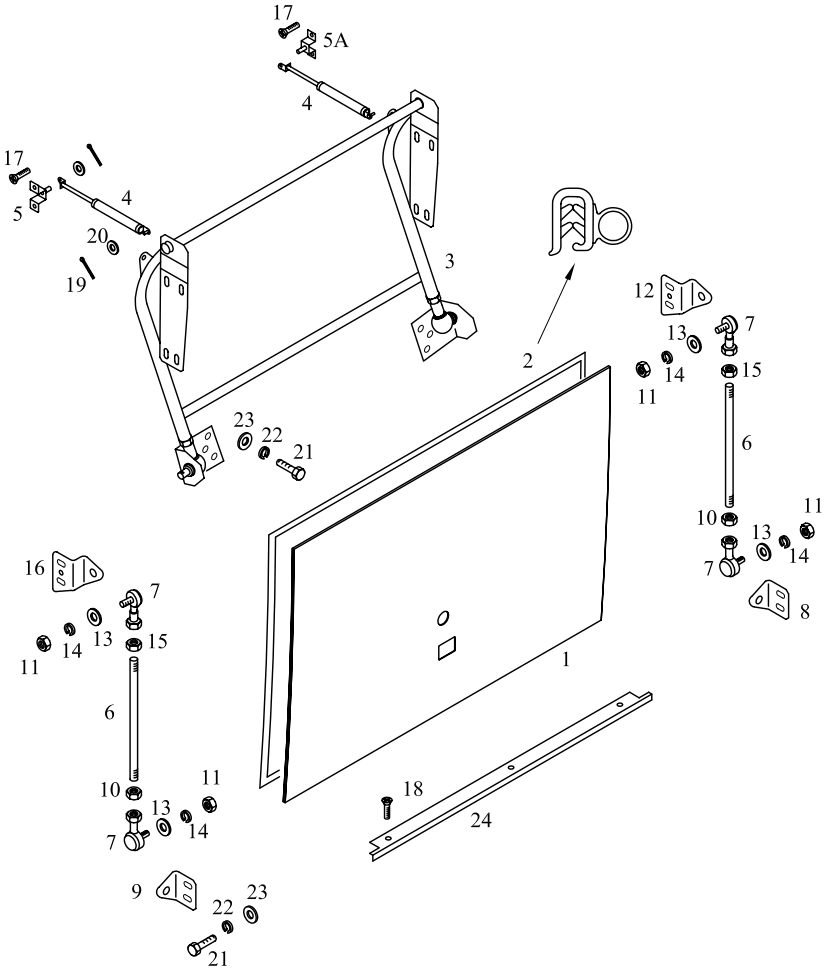

TEMSA	Yan kapak - Happich kilit Side lid - Happich lock Seiten deckeln	Drw.no 62102-97810-06Y Vehicle Model: **TB162Z** **TB163Z**	**28-046.1** RevDate: Page: 1

Pos	Part Number	Turkish	English	German	Qty	R/P	From	Up To	Original Number Supplier
1	62102-97750-74KY	YAN KAPAK	SIDE LID		1		150504		
2	TB112268Y	FİTİL	WEATHER STRIP		AR		1		
3	62102-97160-71Y	BAGAJ KOLU	ARM ASSY HINGE		1		1		
4	62102-70028-01Y	AMORTİSÖR	STAY DAMPER		2		1		
5	62102-11290-77Y	BRAKET	BRAKET		1		1		
5A	62102-70018-01Y	BRAKET	BRAKET		1		1		
6	62102-91570-00Y	ROD	ROD		2		1		
7	62102-61650-01Y	ROTIL	ROD END		2		1		
8	62102-91110-04Y	BRAKET	BRACKET		1		1		
9	62102-91110-05Y	BRAKET	BRACKET		1		1		
10	MS440031Y	SOMUN M10x1,25-5,6	NUT		AR		1		
11	MF430005PY	SOMUN M8	NUT		AR		1		
12	62102-91110-08Y	BRAKET	BRACKET		1		1		
13	MF450005PY	PUL	WASHER PLAIN		AR		1		
14	MF450405Y	RONDELA	WASHER SPRING		AR		1		
15	MF430006Y	SOMUN	NUT		AR		1		
16	62102-91110-12Y	BRAKET	BRACKET		1		1		
17	MC386109	VİDA	SCREW TAPPING		AR		1		
18	MF453615Y	VİDA	SCREW TAPPING		AR		1		
19	MF472037Y	KOPİLYA	PIN SPLIT		AR		1		
20	MF450154Y	PUL	WASHER PLAIN		AR		1		
21	MF100057Y	CIVATA M8*1.25*25	BOLT		AR		1		
22	MF450405Y	RONDELA	WASHER SPRING		AR		1		
23	MF450154Y	PUL	WASHER PLAIN		AR		1		
24	62102-81220-08Y	ALUMİNYUM ÇITA	PLATE EDGE		1		1		
30	62102-97700-74Y	KİLİT KOMPLE	LOCK ASSY		1		150504		
31	62102-97710-81Y	KİLİT TELİ	CONNECTING ROD		1		150504		
32	62102-97710-74Y	KİLİT TELİ	CONNECTING ROD		1		150504		
33	62102-87510-83Y	KİLİT TELİ	CONNECTING ROD		1		150504		
35	TU150136Y	ARA PARÇA	SHIM		2		1		
36	MC324121Y	TUTUCU	STRIKE ASSY		3		1		
37	MF450404Y	RONDELA	WASHER SPRING		AR		1		
38	MF450004Y	PUL	WASHER PLAIN		AR		1		
39	MF100029Y	CIVATA M6*1*20	BOLT		AR		1		
40	MF453017X	VİDA	SCREW		AR		1		

TEMSA	Yan kapak - Happich kilit Side lid - Happich lock Seiten deckeln	Drw.no Vehicle Model: **TB162Z** **TB163Z**	**28-046.1** RevDate: Page: 2

Pos	Part Number	Turkish	English	German	Qty	R/P	From	Up To	Original Number Supplier
41	62102-97710-01Y	PANEL	PANEL		1		150504		
42	62102-97710-94Y	İÇ PANEL	PANEL INNER		1		150504		
43	6020578X	TUTAMAK standart	HANDLE standard	HALTER	1		150504		(BBAG_KILIT_02) HAPPICH
43	6020571X	TUTAMAK merkezi kilit	HANDLE central locking	HALTER	1		150504		(BBAG_KILIT_03) HAPPICH central lock
46	6020601X	KİLİT KOMPLESİ standart	LOCK ASSY standard	SCHLOSS KOMPLEX	1		150504		(BBAG_KILIT_02) HAPPICH
46	6020600X	KİLİT KOMPLESİ merkezi kilit	LOCK ASSY central locking	SCHLOSS KOMPLEX	1		150504		(BBAG_KILIT_03) HAPPICH central lock

TEMSA	Yan kapaklar - standart kilit Side lids - standard lock Seiten deckeln	Group No : 28-047 Draw. Num. : x Rev. Date : Page : 1
	Vehicle Model: TB162Z, TB163Z,	

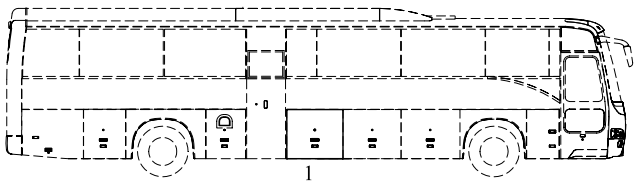

TOILET OPTION

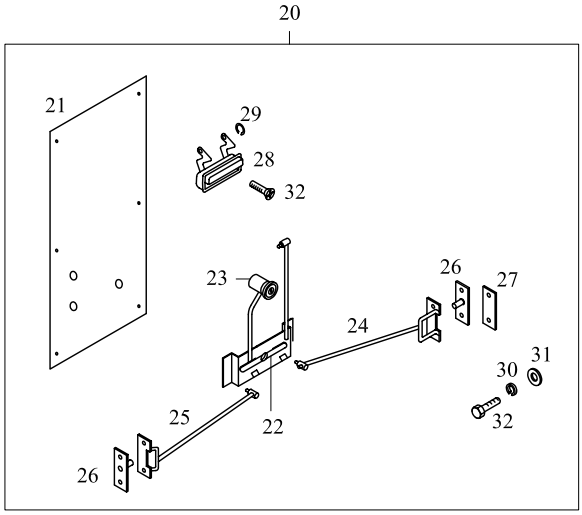

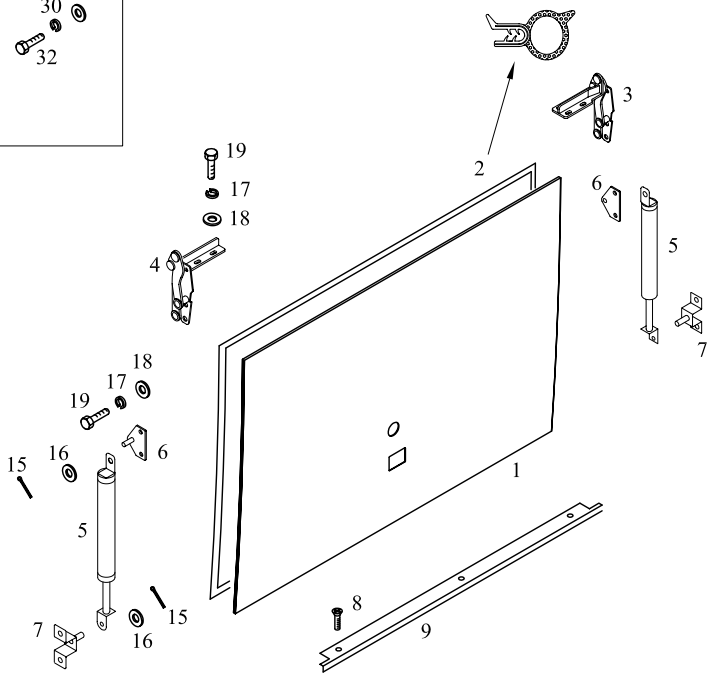

TEMSA	Yan kapak - standart kilit Side lid - standard lock Seiten deckeln	Drw.no 62102-97010-15Y Vehicle Model: **TB162Z** **TB163Z**	**28-047** RevDate: Page: 1

Pos	Part Number	Turkish	English	German	Qty	R/P	From	Up To	Original Number Supplier
1	62102-97550-76Y	YAN KAPAK	SIDE LID		1		1	150504	TOILET OPTION
1	62102-97550-76KY	YAN KAPAK	SIDE LID		1		150504		TOILET OPTION
2	62102-97550-20Y	FİTİL	WEATHER STRIP		1		1		
3	TC257622Y	MENTEŞE	HINGE ASSY		AR		1		
4	TC257623Y	MENTEŞE	HINGE ASSY		AR		1		
5	62102-70038-07Y	AMORTİSÖR	STAY DAMPER		4		1		
6	62102-94101-00Y	BRAKET	BRACKET		4		1		
7	MC211379Y	BRAKET	BRACKET		4		1		
8	MF453615Y	VİDA	SCREW TAPPING		36		1		
9	61714-96900-01Y	ALUMİNYUM ÇITA	PLATE EDGE		4		1		
15	MF472037Y	KOPİLYA	PIN SPLIT		AR		1		2*18
16	MF450005Y	PUL	WASHER PLAIN		AR		1		A8.5
17	MF450404Y	RONDELA	WASHER SPRING		AR		1		A6
18	MF450004Y	PUL	WASHER PLAIN		AR		1		A6.4
19	MF200079Y	CIVATA	SCREW MACHINE		AR		1		6*20
20	62102-97550-30Y	BAGAJ KİLİDİ KOMPLE	LOCK ASSY		1		1		
21	62102-80510-75Y	PANEL	PANEL		1		1		
22	62102-80340-70Y	KİLİT MEKANİZMASI	LINK ASSY		2		1		
23	62102-94200-01X	KİLİT	LOCK		2		1		
24	62102-97550-01Y	KİLİT TELİ	CONNECTING ROD		1		1		
25	62102-97550-04Y	KİLİT TELİ	CONNECTING ROD		1		1		
26	MC324121Y	TUTUCU	STRIKE ASSY		AR		1		
27	TU150136Y	ARA PARÇA	SHIM		AR		1		
28	TC323896Y	TUTAMAK	HANDLE		AR		1		
29	MF522401Y	SEGMAN	RING SNAP		AR		1		
30	MF450404Y	RONDELA	WASHER SPRING		AR		1		
31	MF450004Y	PUL	WASHER PLAIN		AR		1		
32	MF200079Y	CIVATA M6*1*20	BOLT		AR		1		

TEMSA	Yan kapaklar - Happich kilit Side lids - Happich lock Seiten deckeln	Group No : 28-047.1 Draw. Num. : x Rev. Date : Page : 1
	Vehicle Model: TB162Z, TB163Z,	

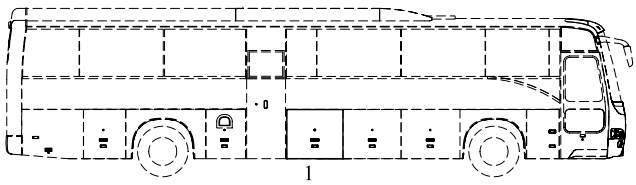

TOILET OPTION

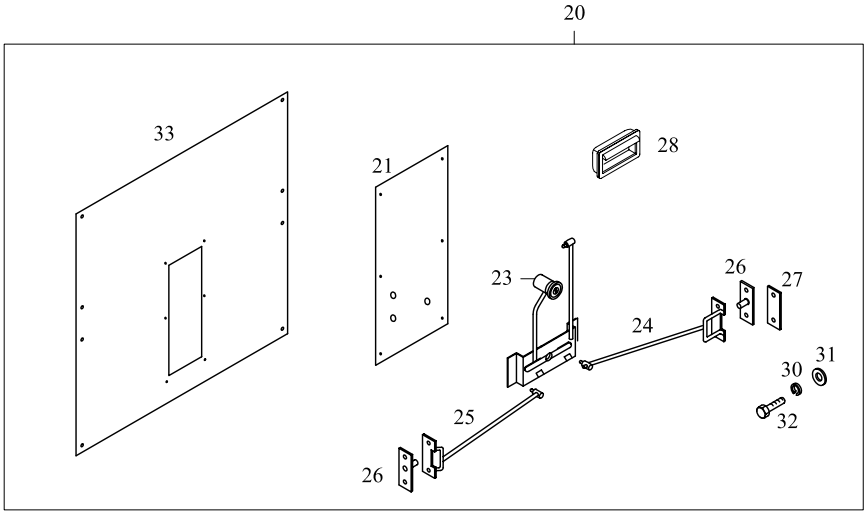

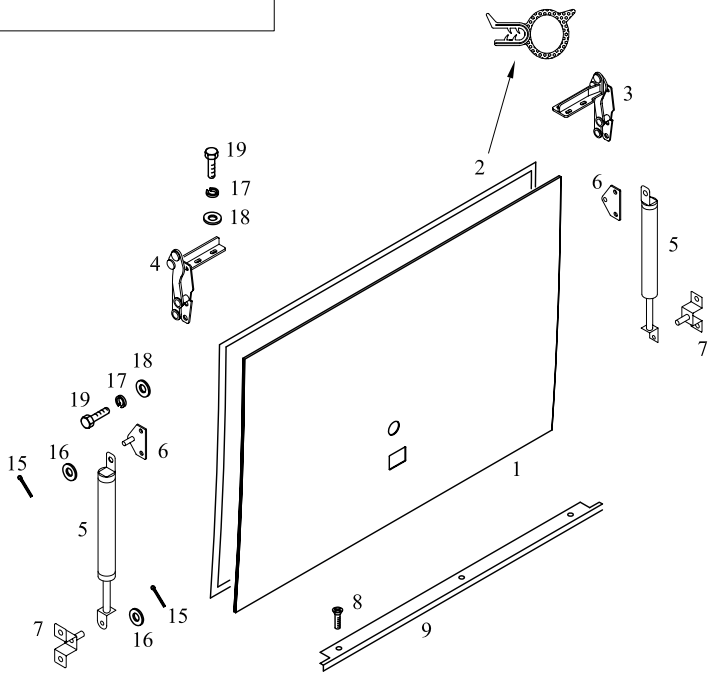

TEMSA	Yan kapak - Happich kilit Side lid - Happich lock Seiten deckeln	Drw.no 62102-97810-15Y Vehicle Model: **TB162Z** **TB163Z**	**28-047.1** RevDate: Page: 1

Pos	Part Number	Turkish	English	German	Qty	R/P	From	Up To	Original Number Supplier
1	62102-97750-76KY	YAN KAPAK	SIDE LID		1		150504		TOILET OPTION
2	62102-97550-20Y	FİTİL	WEATHER STRIP		1		1		
3	TC257622Y	MENTEŞE	HINGE ASSY		AR		1		
4	TC257623Y	MENTEŞE	HINGE ASSY		AR		1		
5	62102-70038-07Y	AMORTİSÖR	STAY DAMPER		4		1		
6	62102-94101-00Y	BRAKET	BRACKET		4		1		
7	MC211379Y	BRAKET	BRACKET		4		1		
8	MF453615Y	VİDA	SCREW TAPPING		36		1		
9	61714-96900-01Y	ALUMİNYUM ÇITA	PLATE EDGE		4		1		
15	MF472037Y	KOPİLYA	PIN SPLIT		AR		1		2*18
16	MF450005Y	PUL	WASHER PLAIN		AR		1		A8.5
17	MF450404Y	RONDELA	WASHER SPRING		AR		1		A6
18	MF450004Y	PUL	WASHER PLAIN		AR		1		A6.4
19	MF200079Y	CIVATA	SCREW MACHINE		AR		1		6*20
20	62102-97700-76AY	BAGAJ KİLİDİ KOMPLE	LOCK ASSY		1		1		
21	62102-80510-75Y	PANEL	PANEL		1		1		
23	6020601X	KİLİT KOMPLESİ standart	LOCK ASSY standard	SCHLOSS KOMPLEX	1		150504		(BBAG_KILIT_02) HAPPICH
23	6020600X	KİLİT KOMPLESİ merkezi kilit	LOCK ASSY central locking	SCHLOSS KOMPLEX	1		150504		(BBAG_KILIT_03) HAPPICH central lock
24	62102-97710-81Y	KİLİT TELİ	CONNECTING ROD		1		150504		
25	62102-97710-74Y	KİLİT TELİ	CONNECTING ROD		1		150504		
26	MC324121Y	TUTUCU	STRIKE ASSY		AR		1		
27	TU150136Y	ARA PARÇA	SHIM		AR		1		
28	6020578X	TUTAMAK standart	HANDLE standard	HALTER	1		150504		(BBAG_KILIT_02) HAPPICH
28	6020571X	TUTAMAK merkezi kilit	HANDLE central locking	HALTER	1		150504		(BBAG_KILIT_03) HAPPICH central lock
30	MF450404Y	RONDELA	WASHER SPRING		AR		1		
31	MF450004Y	PUL	WASHER PLAIN		AR		1		
32	MF200079Y	CIVATA M6*1*20	BOLT		AR		1		
33	62102-97710-98Y	PANEL	PANEL		1		150504		

TEMSA	Yan kapaklar - Happich kilit Side lids - Happich lock Seiten deckeln	Group No : 28-050 Draw. Num. : x Rev. Date : Page : 1
	Vehicle Model: TB162X, TB162Y, TB163X, TB163Y	

TB162X
TB163X

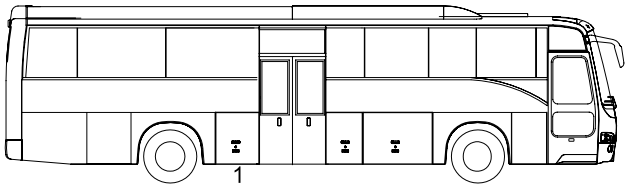

TB162Y
TB163Y

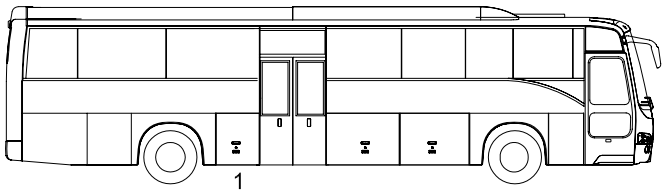

TB162X for toilet
TB163X for toilet

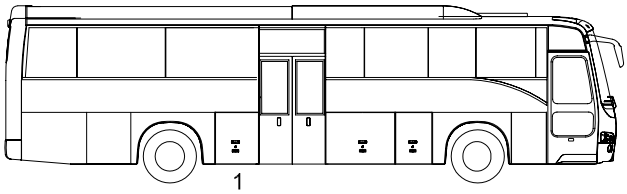

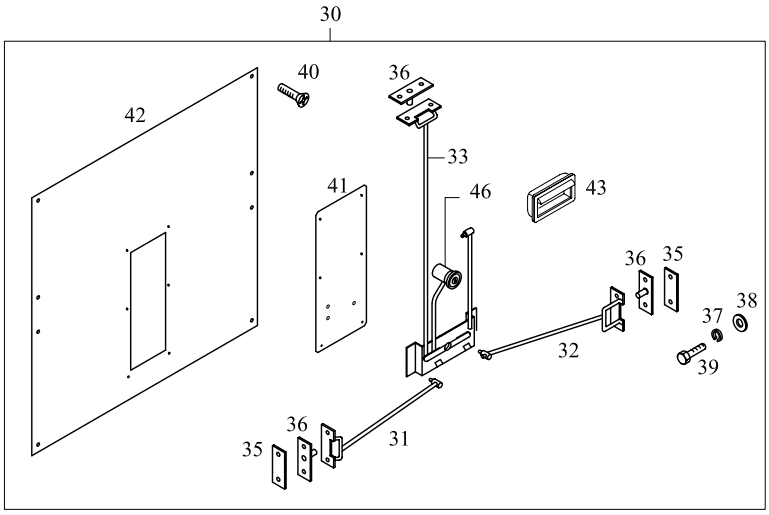

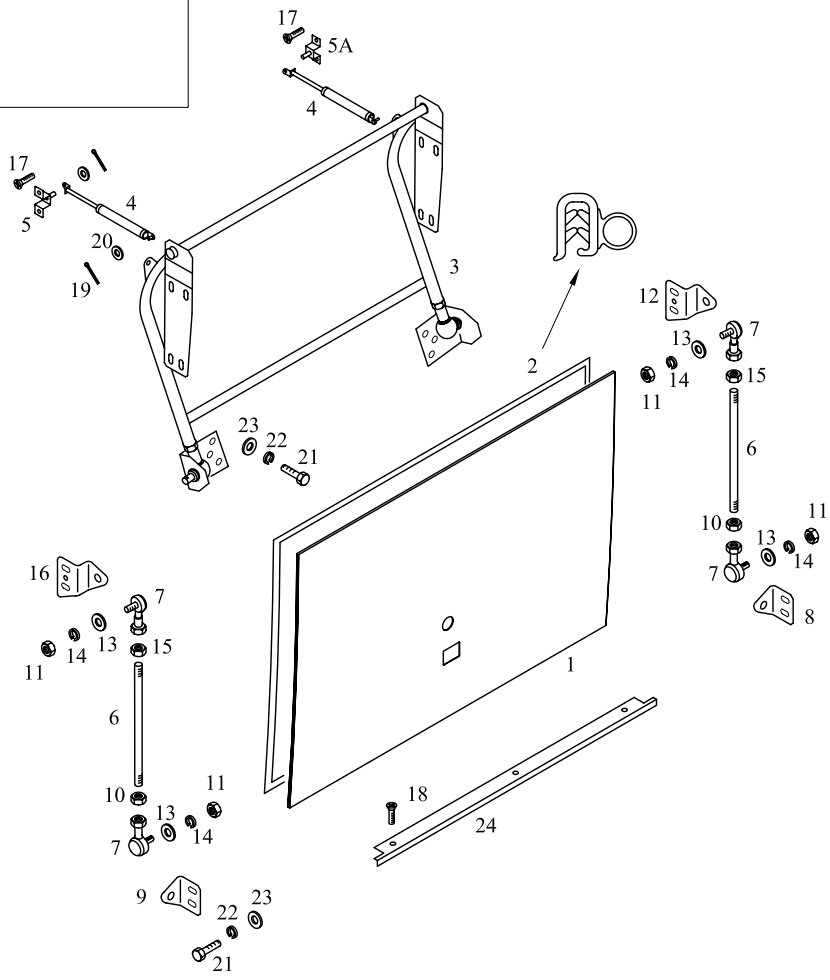

TEMSA	Yan kapak - Happich kilit Side lid - Happich lock Seiten deckeln	Drw.no 62102-98810-02Y Vehicle Model: **TB162X, TB162Y** **TB163X, TB163Y**	**28-050** RevDate: Page: 1

Pos	Part Number	Turkish	English	German	Qty	R/P	From	Up To	Original Number Supplier
1	62102-98750-73Y	YAN KAPAK	SIDE LID		1		1		
2	TB112268Y	FİTİL	WEATHER STRIP		mt		1		
3	62102-98160-73Y	BAGAJ KOLU	ARM ASSY HINGE		1		1		
4	62102-70028-01Y	AMORTİSÖR	STAY DAMPER		2		1		
5	62102-11290-77Y	BRAKET	BRAKET		1		1		
5A	62102-70018-01Y	BRAKET	BRAKET		1		1		
6	62102-91570-00Y	ROD	ROD		2		1		
7	62102-61650-01Y	ROTIL	ROD END		2		1		
8	62102-91110-04Y	BRAKET	BRACKET		2		1		
9	62102-91110-05Y	BRAKET	BRACKET		2		1		
10	MS440031Y	SOMUN	NUT		AR		1		
11	MF430005PY	SOMUN	NUT		AR		1		
12	62102-91110-08Y	BRAKET	BRACKET		2		1		
13	MF450005PY	PUL	WASHER PLAIN		AR		1		
14	MF450405Y	RONDELA	WASHER SPRING		AR		1		
15	MF430006Y	SOMUN	NUT		AR		1		
16	62102-91110-12Y	BRAKET	BRACKET		2		1		
17	MC386109	VİDA	SCREW TAPPING		AR		1		
18	MF453615Y	VİDA	SCREW TAPPING		AR		1		
19	MF472037Y	KOPİLYA	PIN SPLIT		AR		1		
20	MF450154Y	PUL	WASHER PLAIN		AR		1		
21	MF100057Y	CIVATA M8*1.25*25	BOLT		AR		1		
22	MF450405Y	RONDELA	WASHER SPRING		AR		1		
23	MF450154Y	PUL	WASHER PLAIN		AR		1		
24	62102-81220-11Y	ALUMİNYUM ÇITA	PLATE EDGE		1		1		
30	62102-98700-71Y	KİLİT	LOCK ASSY		1		1		
31	62102-98710-81Y	KİLİT TELİ	CONNECTING ROD		1		1		
32	62102-98710-70Y	KİLİT TELİ	CONNECTING ROD		1		1		
33	62102-87510-83Y	KİLİT TELİ	CONNECTING ROD		1		1		
35	TU150136Y	ARA PARÇA	SHIM		AR		1		
36	MC324121Y	TUTUCU	STRIKE ASSY		AR		1		
37	MF450404Y	RONDELA	WASHER SPRING		AR		1		
38	MF450004Y	PUL	WASHER PLAIN		AR		1		
39	MF100029Y	CIVATA M6*1*20	BOLT		AR		1		
40	MF453017X	VİDA	SCREW		AR		1		

TEMSA	Yan kapak - Happich kilit Side lid - Happich lock Seiten deckeln	Drw.no Vehicle Model: **TB162X, TB162Y** **TB163X, TB163Y**	**28-050** RevDate: Page: 2

Pos	Part Number	Turkish	English	German	Qty	R/P	From	Up To	Original Number Supplier
41	62102-97710-01Y	PANEL	PANEL		1		1		
42	62102-98510-91Y	PANEL	PANEL		1		1		
43	6020578X	TUTAMAK standart	HANDLE standard	HALTER	1		1		(BBAG_KILIT_02) HAPPICH
43	6020571X	TUTAMAK merkezi kilit	HANDLE central locking	HALTER	1		1		(BBAG_KILIT_03) HAPPICH central lock
46	6020601X	KİLİT KOMPLESİ standart	LOCK ASSY standard	SCHLOSS KOMPLEX	1		1		(BBAG_KILIT_02) HAPPICH
46	6020600X	KİLİT KOMPLESİ merkezi kilit	LOCK ASSY central locking	SCHLOSS KOMPLEX	1		1		(BBAG_KILIT_03) HAPPICH central lock

TEMSA	Yan kapaklar - Happich kilit Side lids - Happich lock Seiten deckeln	Group No : 28-051 Draw. Num. : x Rev. Date : Page : 1
	Vehicle Model: TB162X, TB163X,	

TB162X
TB163X

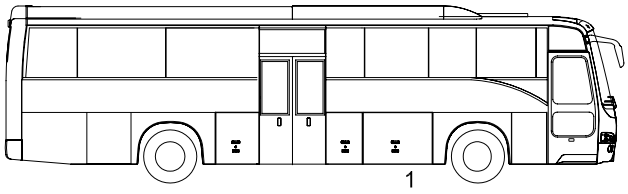

TB162Y
TB163Y

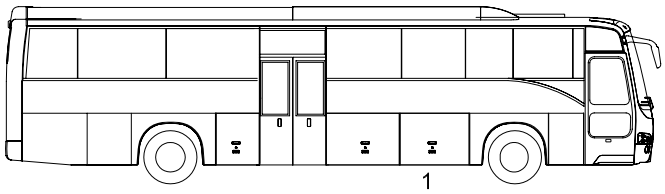

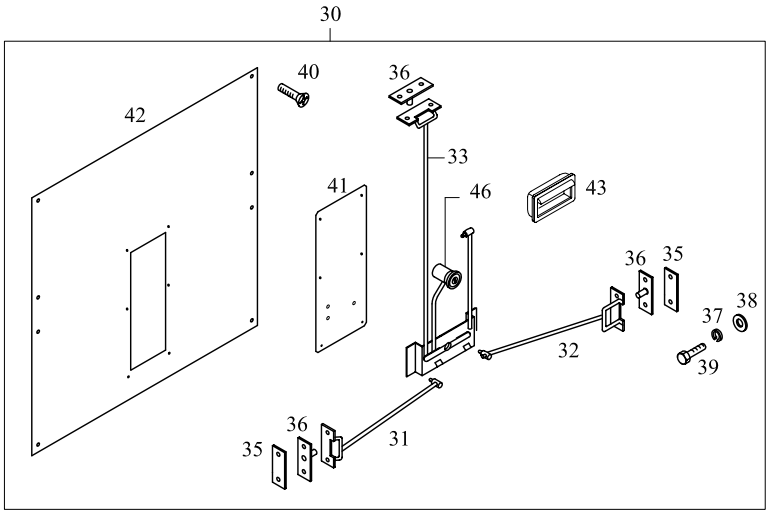

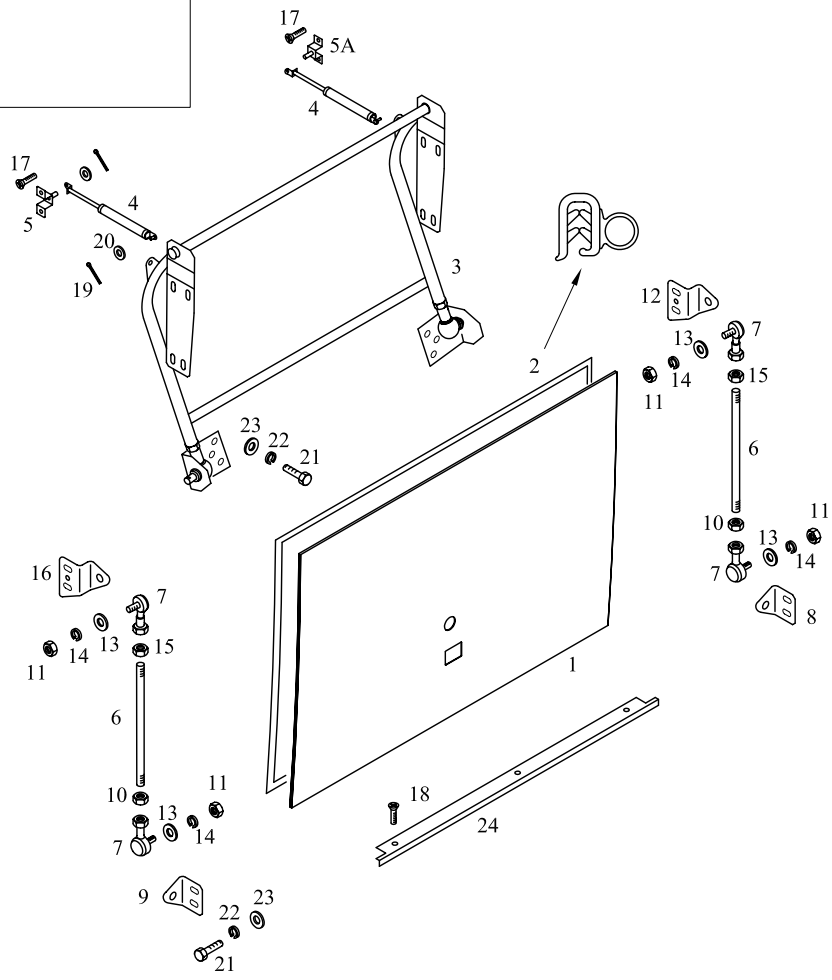

TEMSA	Yan kapak - Happich kilit Side lid - Happich lock Seiten deckeln	Drw.no 62102-97810-17 Vehicle Model: **TB162X, TB162Y** **TB163X, TB163Y**	**28-051** RevDate: Page: 1

Pos	Part Number	Turkish	English	German	Qty	R/P	From	Up To	Original Number Supplier
1	62102-97750-70KY	YAN KAPAK	SIDE LID		1		1		
2	TB112268Y	FİTİL	WEATHER STRIP		mt		1		
3	62102-97160-74Y	BAGAJ KOLU	ARM ASSY HINGE		1		1		
4	62102-70028-01Y	AMORTİSÖR	STAY DAMPER		2		1		
5	62102-11290-77Y	BRAKET	BRAKET		1		1		
5A	62102-70018-01Y	BRAKET	BRAKET		1		1		
6	62102-91570-00Y	ROD	ROD		2		1		
7	62102-61650-01Y	ROTIL	ROD END		2		1		
8	62102-91110-04Y	BRAKET	BRACKET		2		1		
9	62102-91110-05Y	BRAKET	BRACKET		2		1		
10	MS440031Y	SOMUN	NUT		AR		1		
11	MF430005PY	SOMUN	NUT		AR		1		
12	62102-91110-08Y	BRAKET	BRACKET		2		1		
13	MF450005PY	PUL	WASHER PLAIN		AR		1		
14	MF450405Y	RONDELA	WASHER SPRING		AR		1		
15	MF430006Y	SOMUN	NUT		AR		1		
16	62102-91110-12Y	BRAKET	BRACKET		2		1		
17	MC386109	VİDA	SCREW TAPPING		AR		1		
18	MF453615Y	VİDA	SCREW TAPPING		AR		1		
19	MF472037Y	KOPİLYA	PIN SPLIT		AR		1		
20	MF450154Y	PUL	WASHER PLAIN		AR		1		
21	MF100057Y	CIVATA M8*1.25*25	BOLT		AR		1		
22	MF450405Y	RONDELA	WASHER SPRING		AR		1		
23	MF450154Y	PUL	WASHER PLAIN		AR		1		
24	62102-81220-07Y	ALUMİNYUM ÇITA	PLATE EDGE		1		1		
30	62102-97700-70Y	KİLİT	LOCK ASSY		1		1		
31	62102-97710-80Y	KİLİT TELİ	CONNECTING ROD		1		1		
32	62102-97710-70Y	KİLİT TELİ	CONNECTING ROD		1		1		
33	62102-87510-83Y	KİLİT TELİ	CONNECTING ROD		1		1		
35	TU150136Y	ARA PARÇA	SHIM		AR		1		
36	MC324121Y	TUTUCU	STRIKE ASSY		AR		1		
37	MF450404Y	RONDELA	WASHER SPRING		AR		1		
38	MF450004Y	PUL	WASHER PLAIN		AR		1		
39	MF100029Y	CIVATA M6*1*20	BOLT		AR		1		
40	MF453017X	VİDA	SCREW		AR		1		

TEMSA	Yan kapak - Happich kilit Side lid - Happich lock Seiten deckeln	Drw.no Vehicle Model: **TB162X, TB162Y** **TB163X, TB163Y**	**28-051** RevDate: Page: 2

Pos	Part Number	Turkish	English	German	Qty	R/P	From	Up To	Original Number Supplier
41	62102-97710-01Y	PANEL	PANEL		1		1		
42	62102-97710-90Y	PANEL	PANEL		1		1		
43	6020578X	TUTAMAK standart	HANDLE standard	HALTER	1		1		(BBAG_KILIT_02) HAPPICH
43	6020571X	TUTAMAK merkezi kilit	HANDLE central locking	HALTER	1		1		(BBAG_KILIT_03) HAPPICH central lock
46	6020601X	KİLİT KOMPLESİ standart	LOCK ASSY standard	SCHLOSS KOMPLEX	1		1		(BBAG_KILIT_02) HAPPICH
46	6020600X	KİLİT KOMPLESİ merkezi kilit	LOCK ASSY central locking	SCHLOSS KOMPLEX	1		1		(BBAG_KILIT_03) HAPPICH central lock

TEMSA	Yan kapaklar - Happich kilit Side lids - Happich lock Seiten deckeln	Group No : 28-052 Draw. Num. : x Rev. Date : Page : 1
	Vehicle Model: TB162X, TB163X,	

TB162X for toilet
TB163X for toilet

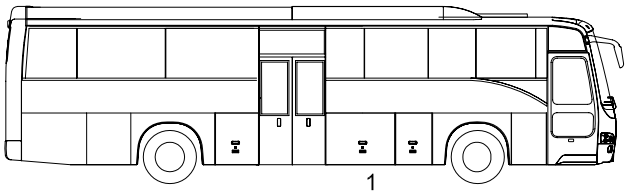

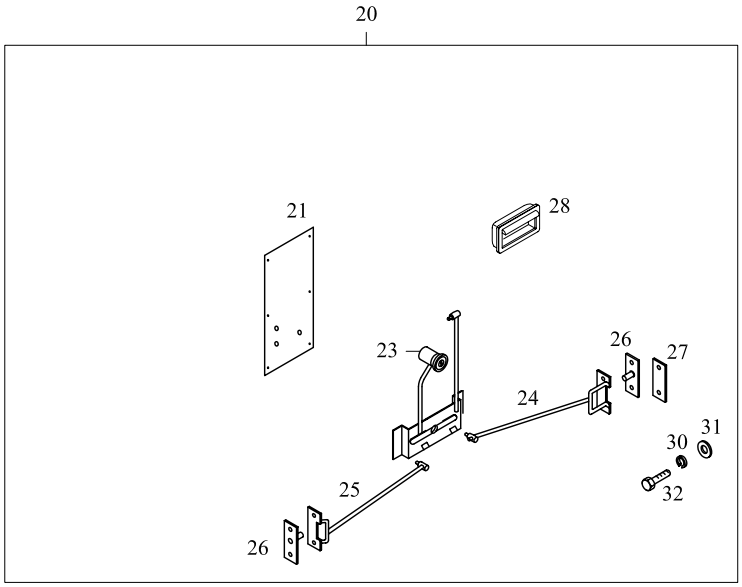

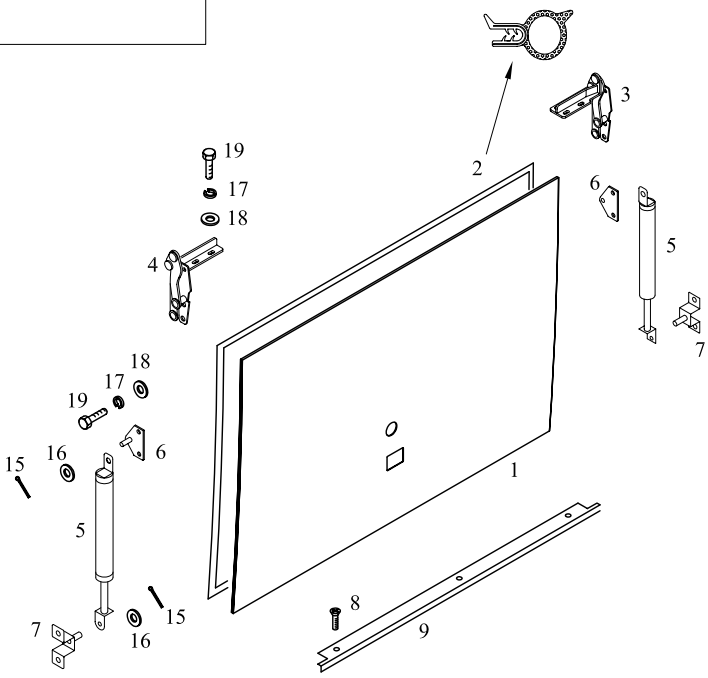

TEMSA	Yan kapak - Happich kilit Side lid - Happich lock Seiten deckeln	Drw.no 62102-92160-72Y Vehicle Model: **TB162X** **TB163X**	**28-052** RevDate: Page: 1

Pos	Part Number	Turkish	English	German	Qty	R/P	From	Up To	Original Number Supplier
1	62102-94150-16Y	YAN KAPAK	SIDE LID		1		150504		with toilet
2	62102-94000-23Y	FİTİL	WEATHER STRIP		1		1		
3	TC257622Y	MENTEŞE	HINGE ASSY		AR		1		
4	TC257623Y	MENTEŞE	HINGE ASSY		AR		1		
5	62102-70038-07Y	AMORTİSÖR	STAY DAMPER		2		1		
6	62102-94101-00Y	BRAKET	BRACKET		2		1		
7	MC211379Y	BRAKET	BRACKET		2		1		
8	MF453615Y	VİDA	SCREW TAPPING		AR		1		
9	61714-96900-01Y	ALUMİNYUM ÇITA	PLATE EDGE		1		1		
15	MF472037Y	KOPİLYA	PIN SPLIT		AR		1		2*18
16	MF450005Y	PUL	WASHER PLAIN		AR		1		A8.5
17	MF450404Y	RONDELA	WASHER SPRING		AR		1		A6
18	MF450004Y	PUL	WASHER PLAIN		AR		1		A6.4
19	MF200079Y	CIVATA	SCREW MACHINE		AR		1		6*20
20	62102-94150-33Y	KİLİT KOMPLE	LOCK ASSY		1		1		
21	62102-80510-75Y	PANEL	PANEL		1		150504		
23	6020601X	KİLİT KOMPLESİ standart	LOCK ASSY standard	SCHLOSS KOMPLEX	1		150504		(BBAG_KILIT_02) HAPPICH
23	6020600X	KİLİT KOMPLESİ merkezi kilit	LOCK ASSY central locking	SCHLOSS KOMPLEX	1		150504		(BBAG_KILIT_03) HAPPICH central lock
24	62102-94160-03Y	KİLİT TELİ	CONNECTING ROD		1		1		
25	62102-94160-07Y	KİLİT TELİ	CONNECTING ROD		1		1		
26	MC324121Y	TUTUCU	STRIKE ASSY		2		1		
27	TU150136Y	ARA PARÇA	SHIM		2		1		
28	6020578X	TUTAMAK standart	HANDLE standard	HALTER	1		150504		(BBAG_KILIT_02) HAPPICH
28	6020571X	TUTAMAK merkezi kilit	HANDLE central locking	HALTER	1		150504		(BBAG_KILIT_03) HAPPICH central lock
29	MF522401Y	SEGMAN	RING SNAP		AR		1		
30	MF450404Y	RONDELA	WASHER SPRING		AR		1		
31	MF450004Y	PUL	WASHER PLAIN		AR		1		
32	MF200079Y	CIVATA M6*1*20	BOLT		AR		1		

TEMSA	Yan kapaklar - Happich kilit Side lids - Happich lock Seiten deckeln	Group No : 28-053 Draw. Num. : x Rev. Date : Page : 1
	Vehicle Model: TB162X, TB163X,	

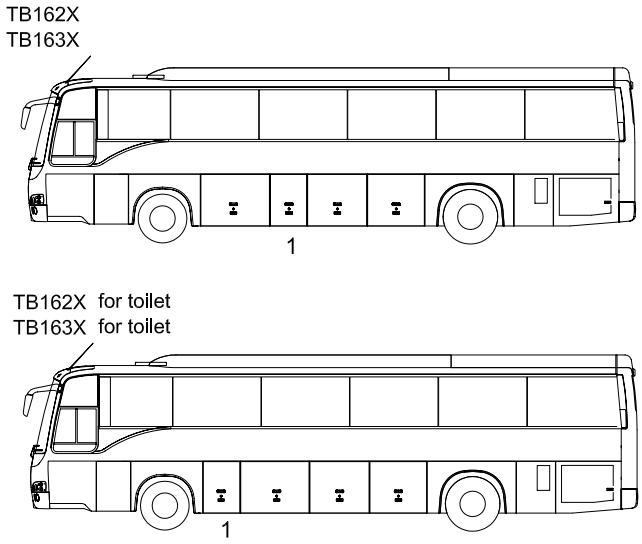

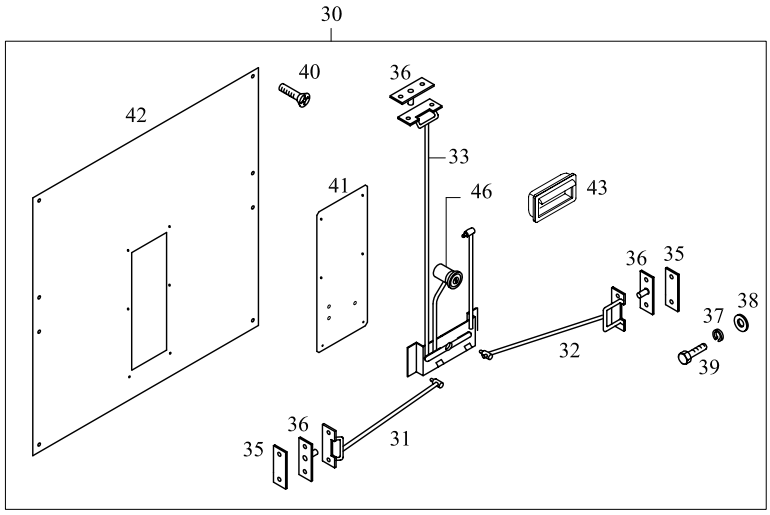

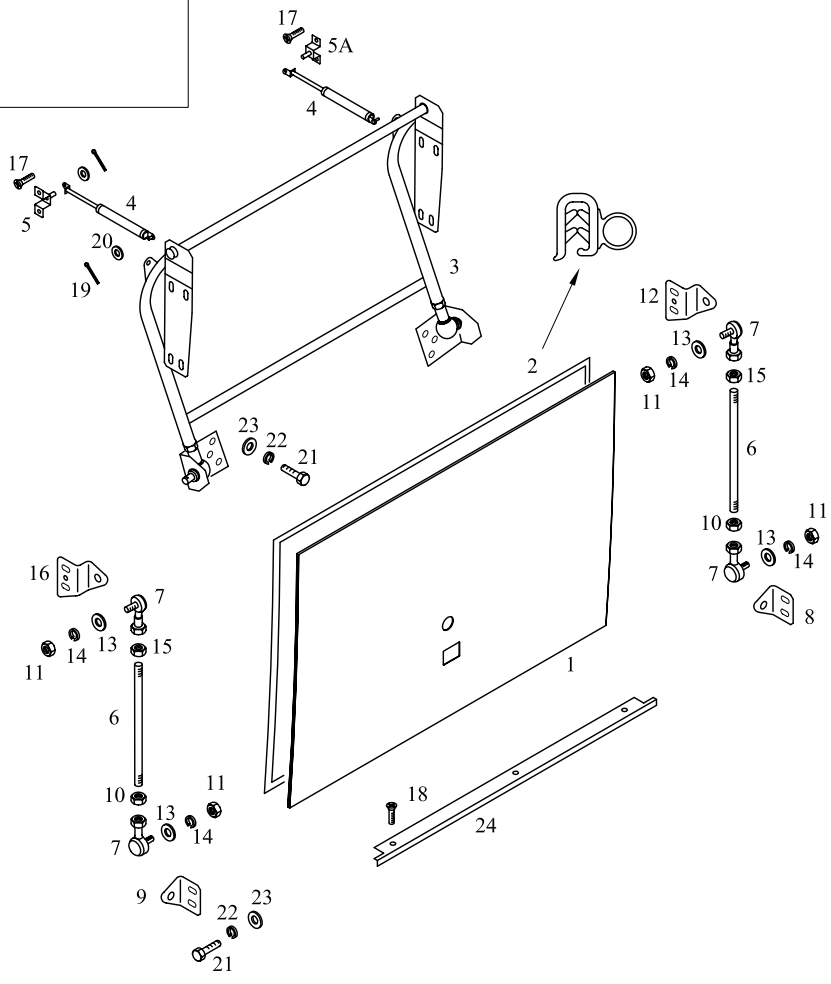

TEMSA	Yan kapak - Happich kilit Side lid - Happich lock Seiten deckeln	Drw.no 62102-98810-03Y Vehicle Model: **TB162X** **TB163X**	**28-053** RevDate: Page: 1

Pos	Part Number	Turkish	English	German	Qty	R/P	From	Up To	Original Number Supplier
1	62102-98750-71Y	YAN KAPAK	SIDE LID		2		1		
2	TB112268Y	FİTİL	WEATHER STRIP		mt		1		
3	62102-98160-71Y	BAGAJ KOLU	ARM ASSY HINGE		1		1		
4	62102-70028-01Y	AMORTİSÖR	STAY DAMPER		2		1		
5	62102-11290-77Y	BRAKET	BRAKET		1		1		
5A	62102-70018-01Y	BRAKET	BRAKET		1		1		
6	62102-91570-00Y	ROD	ROD		2		1		
7	62102-61650-01Y	ROTIL	ROD END		2		1		
8	62102-91110-04Y	BRAKET	BRACKET		2		1		
9	62102-91110-05Y	BRAKET	BRACKET		2		1		
10	MS440031Y	SOMUN	NUT		AR		1		
11	MF430005PY	SOMUN	NUT		AR		1		
12	62102-91110-08Y	BRAKET	BRACKET		2		1		
13	MF450005PY	PUL	WASHER PLAIN		AR		1		
14	MF450405Y	RONDELA	WASHER SPRING		AR		1		
15	MF430006Y	SOMUN	NUT		AR		1		
16	62102-91110-12Y	BRAKET	BRACKET		2		1		
17	MC386109	VİDA	SCREW TAPPING		AR		1		
18	MF453615Y	VİDA	SCREW TAPPING		AR		1		
19	MF472037Y	KOPİLYA	PIN SPLIT		AR		1		
20	MF450154Y	PUL	WASHER PLAIN		AR		1		
21	MF100057Y	CIVATA M8*1.25*25	BOLT		AR		1		
22	MF450405Y	RONDELA	WASHER SPRING		AR		1		
23	MF450154Y	PUL	WASHER PLAIN		AR		1		
24	62102-81220-12Y	ALUMİNYUM ÇITA	PLATE EDGE		1		1		
30	62102-98700-72Y	KİLİT	LOCK ASSY		1		1		
31	62102-98710-82Y	KİLİT TELİ	CONNECTING ROD		1		1		
32	62102-98710-71Y	KİLİT TELİ	CONNECTING ROD		1		1		
33	62102-87510-83Y	KİLİT TELİ	CONNECTING ROD		1		1		
35	TU150136Y	ARA PARÇA	SHIM		AR		1		
36	MC324121Y	TUTUCU	STRIKE ASSY		AR		1		
37	MF450404Y	RONDELA	WASHER SPRING		AR		1		
38	MF450004Y	PUL	WASHER PLAIN		AR		1		
39	MF100029Y	CIVATA M6*1*20	BOLT		AR		1		
40	MF453017X	VİDA	SCREW		AR		1		

TEMSA	Yan kapak - Happich kilit Side lid - Happich lock Seiten deckeln	Drw.no 62102-98810-03Y Vehicle Model: **TB162X** **TB163X**	**28-053** RevDate: Page: 2

Pos	Part Number	Turkish	English	German	Qty	R/P	From	Up To	Original Number Supplier
41	62102-97710-05Y	PANEL	PANEL		1		1		
42	62102-98510-92Y	PANEL	PANEL		1		1		
43	6020578X	TUTAMAK standart	HANDLE standard	HALTER	1		1		(BBAG_KILIT_02) HAPPICH
43	6020571X	TUTAMAK merkezi kilit	HANDLE central locking	HALTER	1		1		(BBAG_KILIT_03) HAPPICH central lock
46	6020601X	KİLİT KOMPLESİ standart	LOCK ASSY standard	SCHLOSS KOMPLEX	1		1		(BBAG_KILIT_02) HAPPICH
46	6020600X	KİLİT KOMPLESİ merkezi kilit	LOCK ASSY central locking	SCHLOSS KOMPLEX	1		1		(BBAG_KILIT_03) HAPPICH central lock

TEMSA	Yan kapaklar - Happich kilit Side lids - Happich lock Seiten deckeln	Group No : 28-054 Draw. Num. : x Rev. Date : Page : 1
	Vehicle Model: TB162Y, TB163Y	

TB162Y
TB163Y

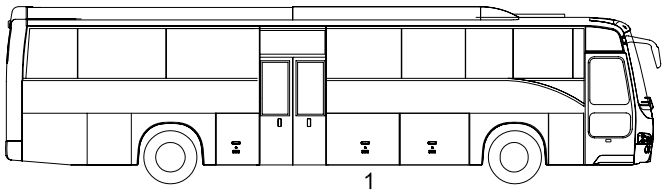

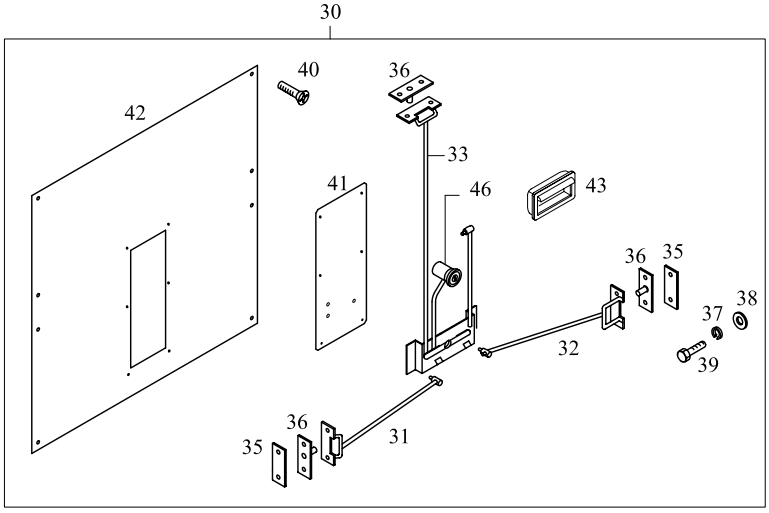

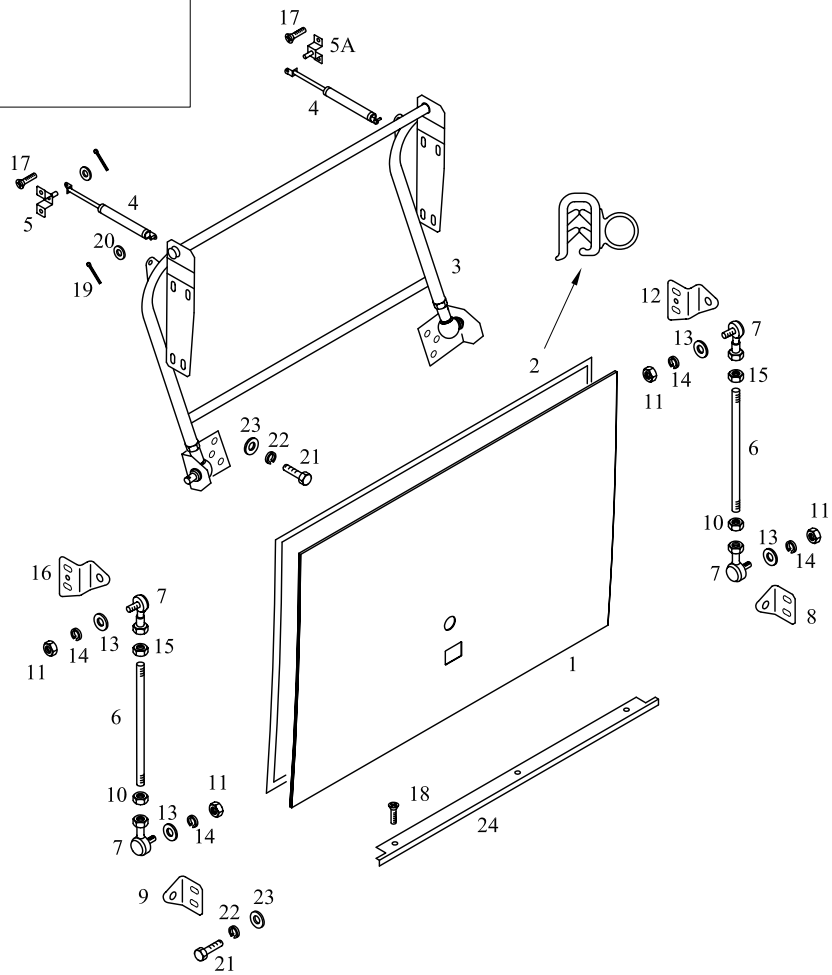

TEMSA	Yan kapak - Happich kilit Side lid - Happich lock Seiten deckeln	Drw.no 62102-99810-02Y Vehicle Model: **TB162Y** **TB163Y**	**28-054** RevDate: Page: 1

Pos	Part Number	Turkish	English	German	Qty	R/P	From	Up To	Original Number Supplier
1	62102-98750-75Y	YAN KAPAK	SIDE LID		2		1		
2	TB112268Y	FİTİL	WEATHER STRIP		mt		1		
3	62102-98160-75Y	BAGAJ KOLU	ARM ASSY HINGE		1		1		
4	62102-70028-01Y	AMORTİSÖR	STAY DAMPER		2		1		
5	62102-11290-77Y	BRAKET	BRAKET		1		1		
5A	62102-70018-01Y	BRAKET	BRAKET		1		1		
6	62102-91570-00Y	ROD	ROD		2		1		
7	62102-61650-01Y	ROTIL	ROD END		2		1		
8	62102-91110-04Y	BRAKET	BRACKET		2		1		
9	62102-91110-05Y	BRAKET	BRACKET		2		1		
10	MS440031Y	SOMUN	NUT		AR		1		
11	MF430005PY	SOMUN	NUT		AR		1		
12	62102-91110-08Y	BRAKET	BRACKET		2		1		
13	MF450005PY	PUL	WASHER PLAIN		AR		1		
14	MF450405Y	RONDELA	WASHER SPRING		AR		1		
15	MF430006Y	SOMUN	NUT		AR		1		
16	62102-91110-12Y	BRAKET	BRACKET		2		1		
17	MC386109	VİDA	SCREW TAPPING		AR		1		
18	MF453615Y	VİDA	SCREW TAPPING		AR		1		
19	MF472037Y	KOPİLYA	PIN SPLIT		AR		1		
20	MF450154Y	PUL	WASHER PLAIN		AR		1		
21	MF100057Y	CIVATA M8*1.25*25	BOLT		AR		1		
22	MF450405Y	RONDELA	WASHER SPRING		AR		1		
23	MF450154Y	PUL	WASHER PLAIN		AR		1		
24	62102-81220-13Y	ALUMİNYUM ÇITA	PLATE EDGE		1		1		
30	62102-99700-71Y	KİLİT	LOCK ASSY		1		1		
31	62102-98710-83Y	KİLİT TELİ	CONNECTING ROD		1		1		
32	62102-98710-74Y	KİLİT TELİ	CONNECTING ROD		1		1		
33	62102-87510-83Y	KİLİT TELİ	CONNECTING ROD		1		1		
35	TU150136Y	ARA PARÇA	SHIM		AR		1		
36	MC324121Y	TUTUCU	STRIKE ASSY		AR		1		
37	MF450404Y	RONDELA	WASHER SPRING		AR		1		
38	MF450004Y	PUL	WASHER PLAIN		AR		1		
39	MF100029Y	CIVATA M6*1*20	BOLT		AR		1		
40	MF453017X	VİDA	SCREW		AR		1		

TEMSA	Yan kapak - Happich kilit Side lid - Happich lock Seiten deckeln	Drw.no 62102-99810-02Y Vehicle Model: **TB162Y** **TB163Y**	**28-054** RevDate: Page: 2

Pos	Part Number	Turkish	English	German	Qty	R/P	From	Up To	Original Number Supplier
41	62102-97710-01Y	PANEL	PANEL		1		1		
42	62102-98510-95Y	PANEL	PANEL		1		1		
43	6020578X	TUTAMAK standart	HANDLE standard	HALTER	1		1		(BBAG_KILIT_02) HAPPICH
43	6020571X	TUTAMAK merkezi kilit	HANDLE central locking	HALTER	1		1		(BBAG_KILIT_03) HAPPICH central lock
46	6020601X	KİLİT KOMPLESİ standart	LOCK ASSY standard	SCHLOSS KOMPLEX	1		1		(BBAG_KILIT_02) HAPPICH
46	6020600X	KİLİT KOMPLESİ merkezi kilit	LOCK ASSY central locking	SCHLOSS KOMPLEX	1		1		(BBAG_KILIT_03) HAPPICH central lock

TEMSA	Yan kapaklar - Happich kilit Side lids - Happich lock Seiten deckeln	Group No : 28-055 Draw. Num. : x Rev. Date : Page : 1
	Vehicle Model: TB162X, TB162Y, TB163X, TB163Y	

TB162X
TB163X

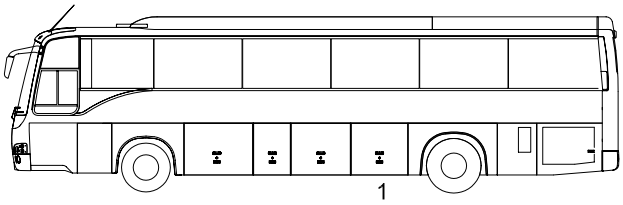

TB162Y
TB163Y

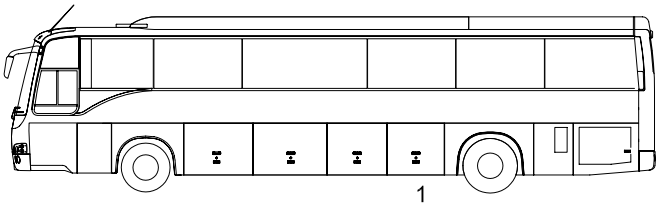

TB162X for toilet
TB163X for toilet

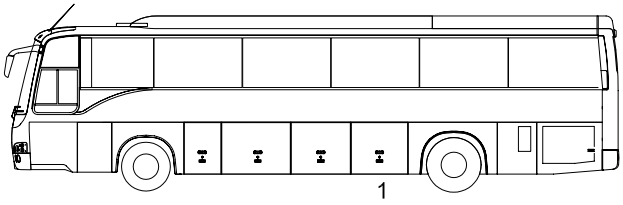

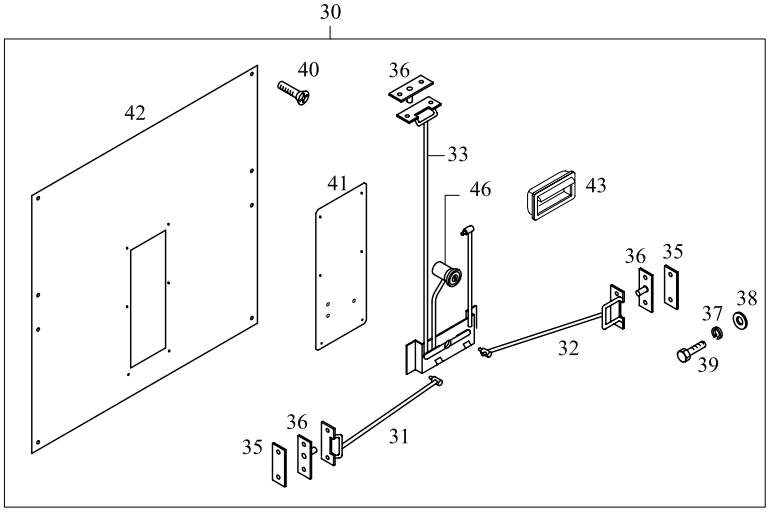

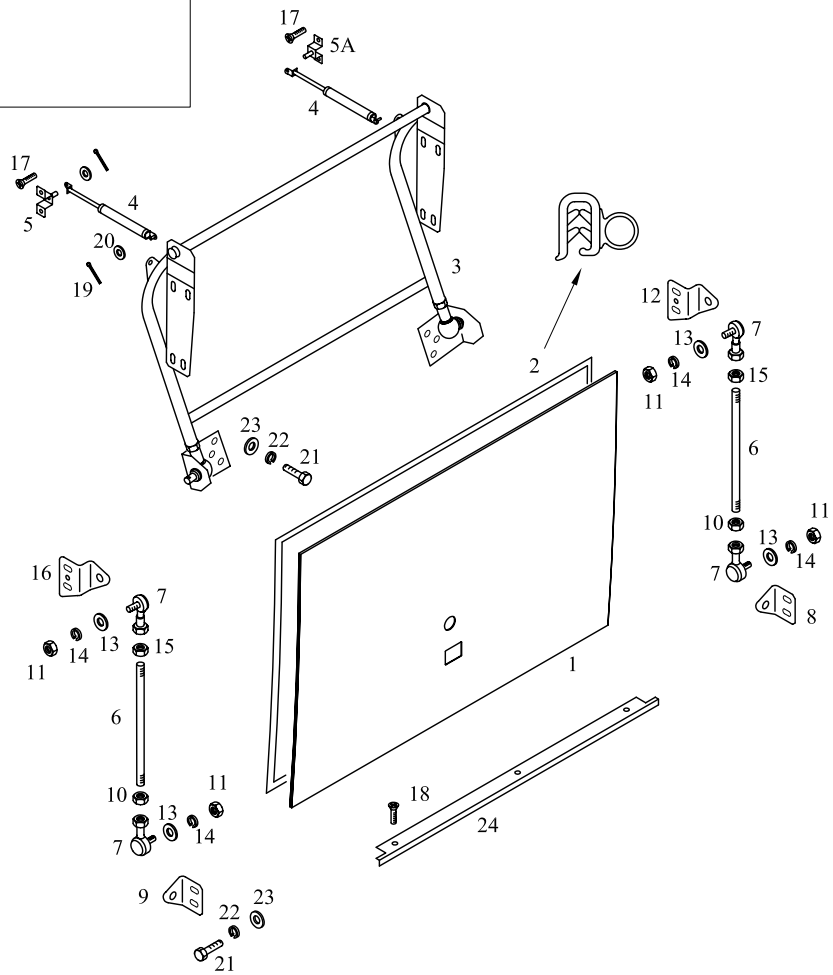

TEMSA	Yan kapak - Happich kilit Side lid - Happich lock Seiten deckeln	Drw.no Vehicle Model: TB162X, TB162Y TB163X, TB163Y	28-055 RevDate: Page: 1

Pos	Part Number	Turkish	English	German	Qty	R/P	From	Up To	Original Number Supplier
1	62102-98750-70Y	YAN KAPAK	SIDE LID		1		1		
2	TB112268Y	FİTİL	WEATHER STRIP		mt		1		
3	62102-98160-70Y	BAGAJ KOLU	ARM ASSY HINGE		1		1		
4	62102-70028-01Y	AMORTİSÖR	STAY DAMPER		2		1		
5	62102-11290-77Y	BRAKET	BRAKET		1		1		
5A	62102-70018-01Y	BRAKET	BRAKET		1		1		
6	62102-91570-00Y	ROD	ROD		2		1		
7	62102-61650-01Y	ROTIL	ROD END		2		1		
8	62102-91110-04Y	BRAKET	BRACKET		2		1		
9	62102-91110-05Y	BRAKET	BRACKET		2		1		
10	MS440031Y	SOMUN	NUT		AR		1		
11	MF430005PY	SOMUN	NUT		AR		1		
12	62102-91110-08Y	BRAKET	BRACKET		2		1		
13	MF450005PY	PUL	WASHER PLAIN		AR		1		
14	MF450405Y	RONDELA	WASHER SPRING		AR		1		
15	MF430006Y	SOMUN	NUT		AR		1		
16	62102-91110-12Y	BRAKET	BRACKET		2		1		
17	MC386109	VİDA	SCREW TAPPING		AR		1		
18	MF453615Y	VİDA	SCREW TAPPING		AR		1		
19	MF472037Y	KOPİLYA	PIN SPLIT		AR		1		
20	MF450154Y	PUL	WASHER PLAIN		AR		1		
21	MF100057Y	CIVATA M8*1.25*25	BOLT		AR		1		
22	MF450405Y	RONDELA	WASHER SPRING		AR		1		
23	MF450154Y	PUL	WASHER PLAIN		AR		1		
24	62102-81220-11Y	ALUMİNYUM ÇITA	PLATE EDGE		1		1		
30	62102-98700-70Y	KİLİT	LOCK ASSY		1		1		
31	62102-98710-80Y	KİLİT TELİ	CONNECTING ROD		1		1		
32	62102-98710-70Y	KİLİT TELİ	CONNECTING ROD		1		1		
33	62102-87510-83Y	KİLİT TELİ	CONNECTING ROD		1		1		
35	TU150136Y	ARA PARÇA	SHIM		AR		1		
36	MC324121Y	TUTUCU	STRIKE ASSY		AR		1		
37	MF450404Y	RONDELA	WASHER SPRING		AR		1		
38	MF450004Y	PUL	WASHER PLAIN		AR		1		
39	MF100029Y	CIVATA M6*1*20	BOLT		AR		1		
40	MF453017X	VİDA	SCREW		AR		1		

TEMSA	Yan kapak - Happich kilit Side lid - Happich lock Seiten deckeln	Drw.no Vehicle Model: **TB162X, TB162Y** **TB163X, TB163Y**	**28-055** RevDate: Page: 2

Pos	Part Number	Turkish	English	German	Qty	R/P	From	Up To	Original Number Supplier
41	62102-97710-01Y	PANEL	PANEL		1		1		
42	62102-98510-90Y	PANEL	PANEL		1		1		
43	6020578X	TUTAMAK standart	HANDLE standard	HALTER	1		1		(BBAG_KILIT_02) HAPPICH
43	6020571X	TUTAMAK merkezi kilit	HANDLE central locking	HALTER	1		1		(BBAG_KILIT_03) HAPPICH central lock
46	6020601X	KİLİT KOMPLESİ standart	LOCK ASSY standard	SCHLOSS KOMPLEX	1		1		(BBAG_KILIT_02) HAPPICH
46	6020600X	KİLİT KOMPLESİ merkezi kilit	LOCK ASSY central locking	SCHLOSS KOMPLEX	1		1		(BBAG_KILIT_03) HAPPICH central lock

TEMSA	Yan kapaklar - Happich kilit Side lids - Happich lock Seiten deckeln	Group No : 28-056 Draw. Num. : x Rev. Date : Page : 1
	Vehicle Model: TB162X, TB162Y, TB163X, TB163Y	

TB162X
TB163X

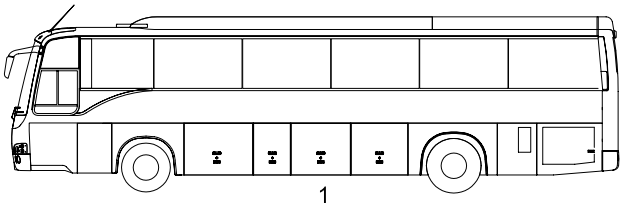

TB162Y
TB163Y

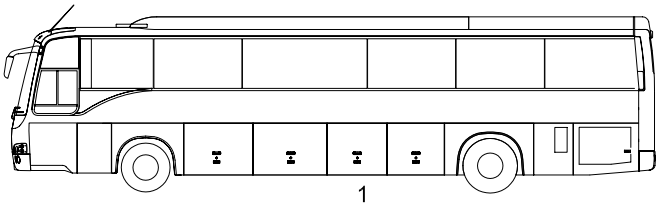

TB162X for toilet
TB163X for toilet

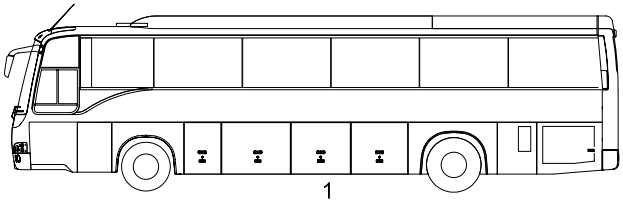

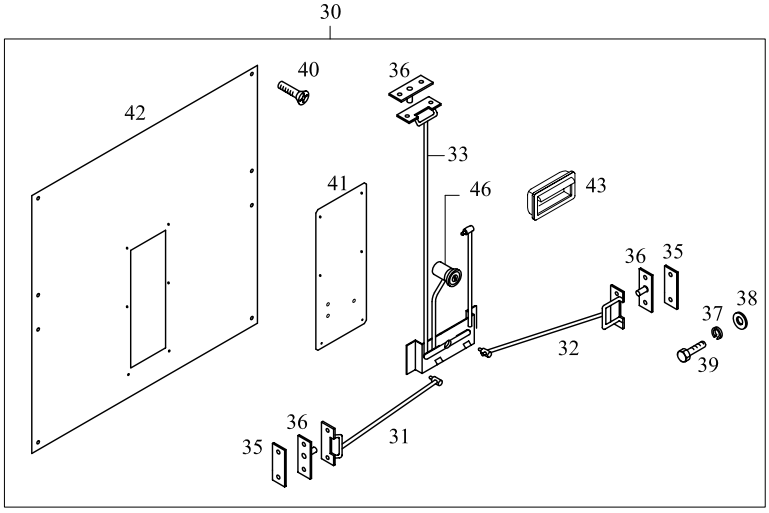

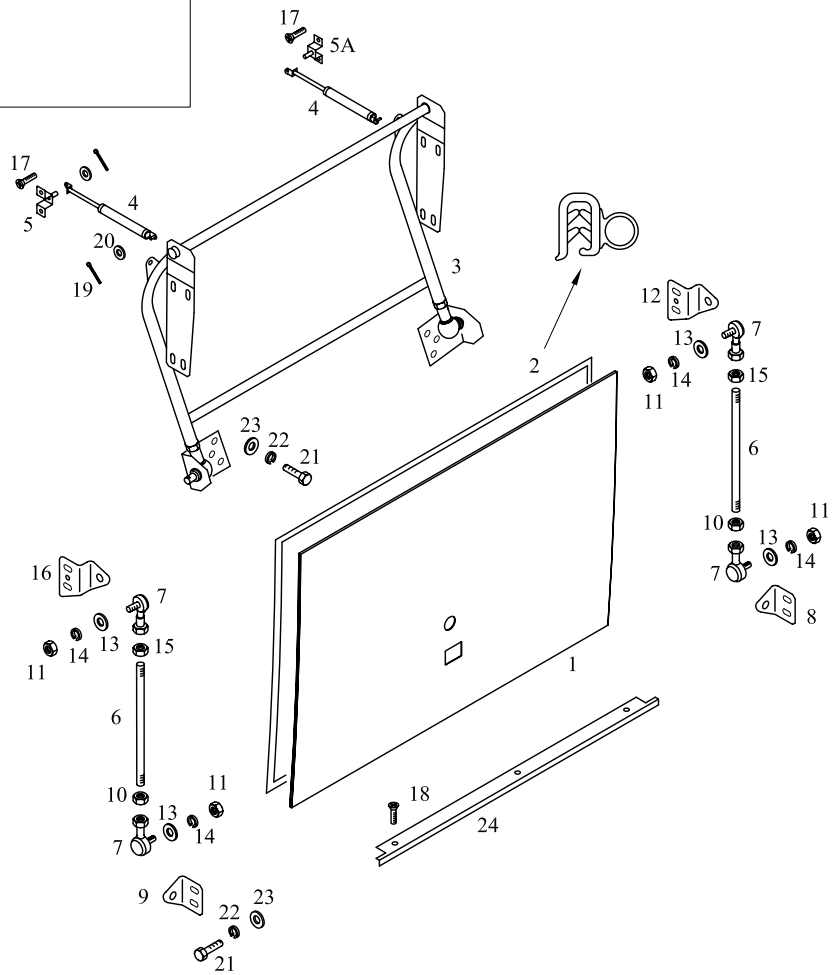

TEMSA	Yan kapak - Happich kilit Side lid - Happich lock Seiten deckeln	Drw.no 62102-96810-02 Vehicle Model: **TB162X, TB162Y** **TB163X, TB163Y**	**28-056** RevDate: Page: 1

Pos	Part Number	Turkish	English	German	Qty	R/P	From	Up To	Original Number Supplier
1	62102-96750-70KY	YAN KAPAK	SIDE LID		1		1		
2	TB112268Y	FİTİL	WEATHER STRIP		mt		1		
3	62102-96160-70Y	BAGAJ KOLU	ARM ASSY HINGE		1		1		
4	62102-70028-01Y	AMORTİSÖR	STAY DAMPER		2		1		
5	62102-11290-77Y	BRAKET	BRAKET		1		1		
5A	62102-70018-01Y	BRAKET	BRAKET		1		1		
6	62102-91570-00Y	ROD	ROD		2		1		
7	62102-61650-01Y	ROTIL	ROD END		2		1		
8	62102-91110-04Y	BRAKET	BRACKET		2		1		
9	62102-91110-05Y	BRAKET	BRACKET		2		1		
10	MS440031Y	SOMUN	NUT		AR		1		
11	MF430005PY	SOMUN	NUT		AR		1		
12	62102-91110-08Y	BRAKET	BRACKET		2		1		
13	MF450005PY	PUL	WASHER PLAIN		AR		1		
14	MF450405Y	RONDELA	WASHER SPRING		AR		1		
15	MF430006Y	SOMUN	NUT		AR		1		
16	62102-91110-12Y	BRAKET	BRACKET		2		1		
17	MC386109	VİDA	SCREW TAPPING		AR		1		
18	MF453615Y	VİDA	SCREW TAPPING		AR		1		
19	MF472037Y	KOPİLYA	PIN SPLIT		AR		1		
20	MF450154Y	PUL	WASHER PLAIN		AR		1		
21	MF100057Y	CIVATA M8*1.25*25	BOLT		AR		1		
22	MF450405Y	RONDELA	WASHER SPRING		AR		1		
23	MF450154Y	PUL	WASHER PLAIN		AR		1		
24	62102-81220-10Y	ALUMİNYUM ÇITA	PLATE EDGE		1		1		
30	62102-96700-70Y	KİLİT	LOCK ASSY		1		1		
31	62102-97710-86Y	KİLİT TELİ	CONNECTING ROD		1		1		
32	62102-97710-76Y	KİLİT TELİ	CONNECTING ROD		1		1		
33	62102-87510-83Y	KİLİT TELİ	CONNECTING ROD		1		1		
35	TU150136Y	ARA PARÇA	SHIM		AR		1		
36	MC324121Y	TUTUCU	STRIKE ASSY		AR		1		
37	MF450404Y	RONDELA	WASHER SPRING		AR		1		
38	MF450004Y	PUL	WASHER PLAIN		AR		1		
39	MF100029Y	CIVATA M6*1*20	BOLT		AR		1		
40	MF453017X	VİDA	SCREW		AR		1		

TEMSA	Yan kapak - Happich kilit Side lid - Happich lock Seiten deckeln	Drw.no Vehicle Model: **TB162X, TB162Y** **TB163X, TB163Y**	**28-056** RevDate: Page: 2

Pos	Part Number	Turkish	English	German	Qty	R/P	From	Up To	Original Number Supplier
41	62102-97710-01Y	PANEL	PANEL		1		1		
42	62102-97710-96Y	PANEL	PANEL		1		1		
43	6020578X	TUTAMAK standart	HANDLE standard	HALTER	1		1		(BBAG_KILIT_02) HAPPICH
43	6020571X	TUTAMAK merkezi kilit	HANDLE central locking	HALTER	1		1		(BBAG_KILIT_03) HAPPICH central lock
46	6020601X	KİLİT KOMPLESİ standart	LOCK ASSY standard	SCHLOSS KOMPLEX	1		1		(BBAG_KILIT_02) HAPPICH
46	6020600X	KİLİT KOMPLESİ merkezi kilit	LOCK ASSY central locking	SCHLOSS KOMPLEX	1		1		(BBAG_KILIT_03) HAPPICH central lock

TEMSA	Yan kapaklar / Side lids / Seiten deckeln — Kreş / Creche — - Happich kilit / - Happich lock		Group No : 28-057 Draw. Num. : x Rev. Date : Page : 1
	Vehicle Model:	TB162X, TB162Y, TB163X, TB163Y	

TB162X
TB163X

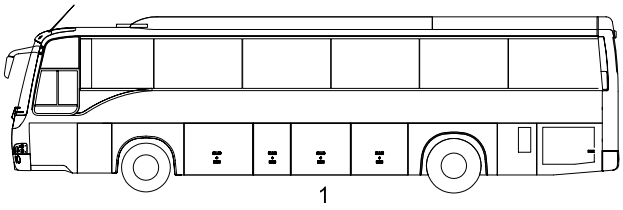

TB162Y
TB163Y

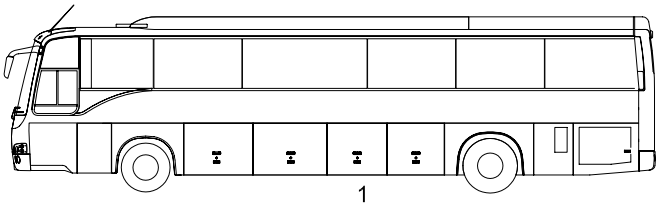

TB162X for toilet
TB163X for toilet

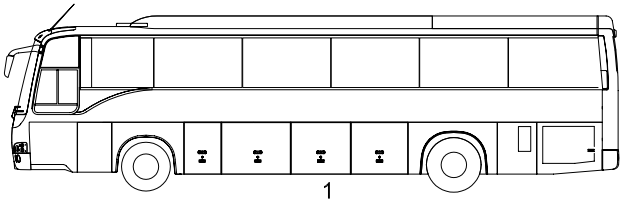

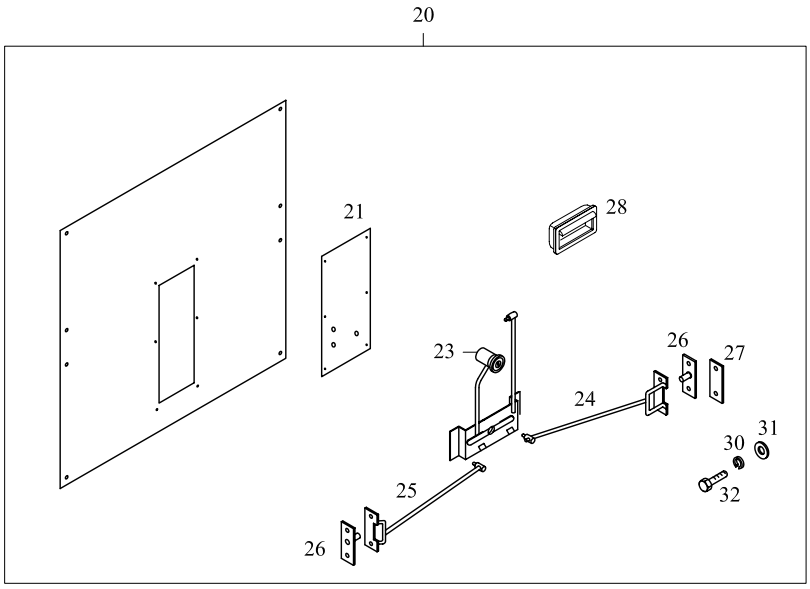

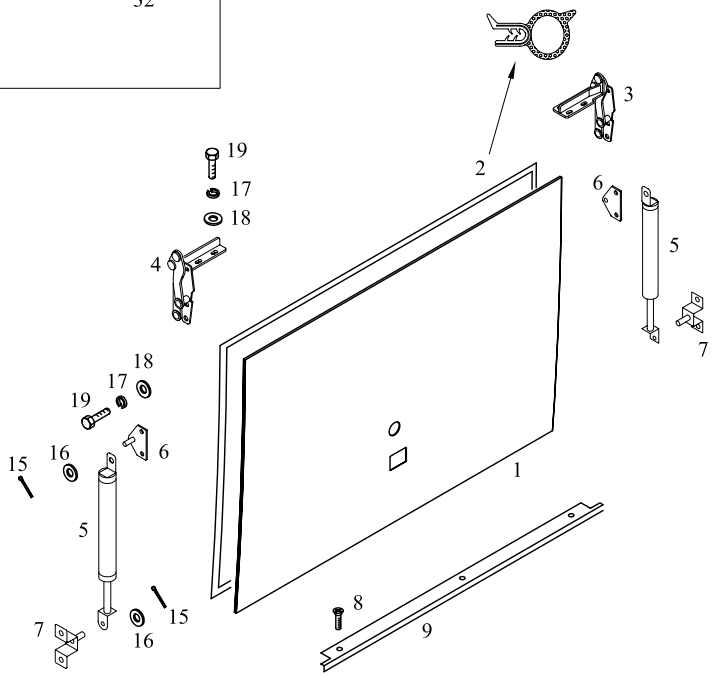

TEMSA	Yan kapak - Happich kilit Side lid - Happich lock Seiten deckeln	Drw.no 62102-96810-15Y Vehicle Model: **TB162X, TB162Y** **TB163X, TB163Y**	**28-057** RevDate: Page: 1

Pos	Part Number	Turkish	English	German	Qty	R/P	From	Up To	Original Number Supplier
1	62102-96750-72KY	YAN KAPAK	SIDE LID		1		1		FOR CRECHE
2	62102-97550-21Y	FİTİL	WEATHER STRIP		1		1		
3	TC257622Y	MENTEŞE	HINGE ASSY		AR		1		
4	TC257623Y	MENTEŞE	HINGE ASSY		AR		1		
5	62102-70038-07Y	AMORTİSÖR	STAY DAMPER		2		1		
6	62102-94101-00Y	BRAKET	BRACKET		2		1		
7	MC211379Y	BRAKET	BRACKET		2		1		
8	MF453615Y	VİDA	SCREW TAPPING		AR		1		
9	61714-96900-01Y	ALUMİNYUM ÇITA	PLATE EDGE		1		1		
15	MF472037Y	KOPİLYA	PIN SPLIT		AR		1		2*18
16	MF450005Y	PUL	WASHER PLAIN		AR		1		A8.5
17	MF450404Y	RONDELA	WASHER SPRING		AR		1		A6
18	MF450004Y	PUL	WASHER PLAIN		AR		1		A6.4
19	MF200079Y	CIVATA	SCREW MACHINE		AR		1		6*20
20	62102-96700-72Y	KİLİT KOMPLE	LOCK ASSY		1		1		
21	62102-97710-03Y	PANEL	PANEL		1		150504		
23	6020601X	KİLİT KOMPLESİ standart	LOCK ASSY standard	SCHLOSS KOMPLEX	1		150504		(BBAG_KILIT_02) HAPPICH
23	6020600X	KİLİT KOMPLESİ merkezi kilit	LOCK ASSY central locking	SCHLOSS KOMPLEX	1		150504		(BBAG_KILIT_03) HAPPICH central lock
24	62102-97710-86Y	KİLİT TELİ	CONNECTING ROD		1		1		
25	62102-97710-77Y	KİLİT TELİ	CONNECTING ROD		1		1		
26	MC324121Y	TUTUCU	STRIKE ASSY		2		1		
27	TU150136Y	ARA PARÇA	SHIM		2		1		
28	6020578X	TUTAMAK standart	HANDLE standard	HALTER	1		150504		(BBAG_KILIT_02) HAPPICH
28	6020571X	TUTAMAK merkezi kilit	HANDLE central locking	HALTER	1		150504		(BBAG_KILIT_03) HAPPICH central lock
29	MF522401Y	SEGMAN	RING SNAP		AR		1		
30	MF450404Y	RONDELA	WASHER SPRING		AR		1		
31	MF450004Y	PUL	WASHER PLAIN		AR		1		
32	MF200079Y	CIVATA M6*1*20	BOLT		AR		1		
34	62102-96710-98Y	PANEL	PANEL	1	1		1		

TEMSA	Yan kapaklar - Happich kilit Side lids - Happich lock Seiten deckeln	Group No : 28-058 Draw. Num. : x Rev. Date : Page : 1
	Vehicle Model: TB162X, TB162Y, TB163X, TB163Y	

TB162X
TB163X

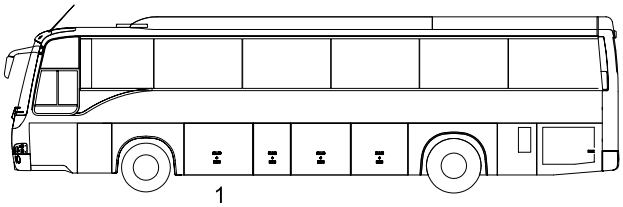

TB162Y
TB163Y

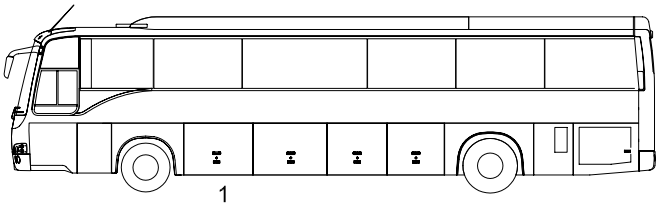

TB162X for toilet
TB163X for toilet

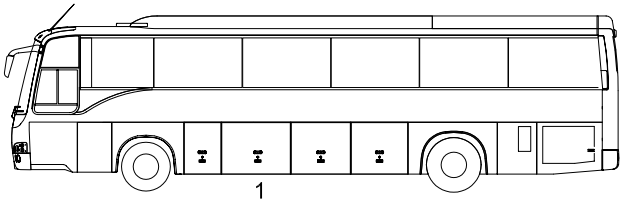

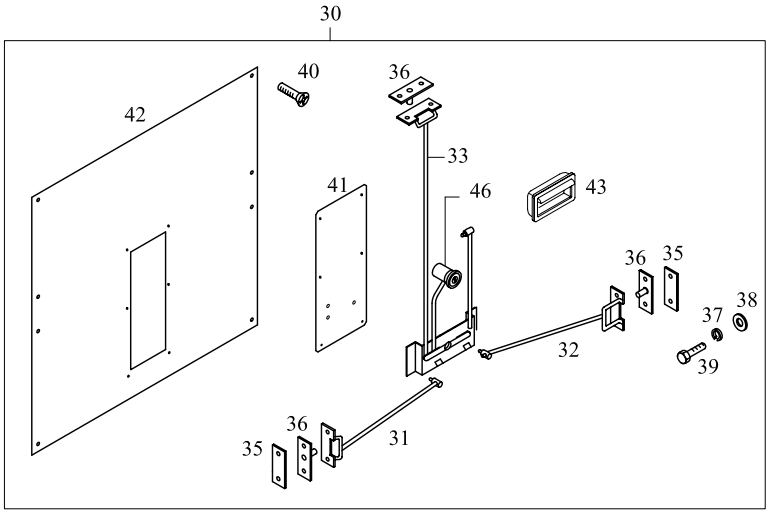

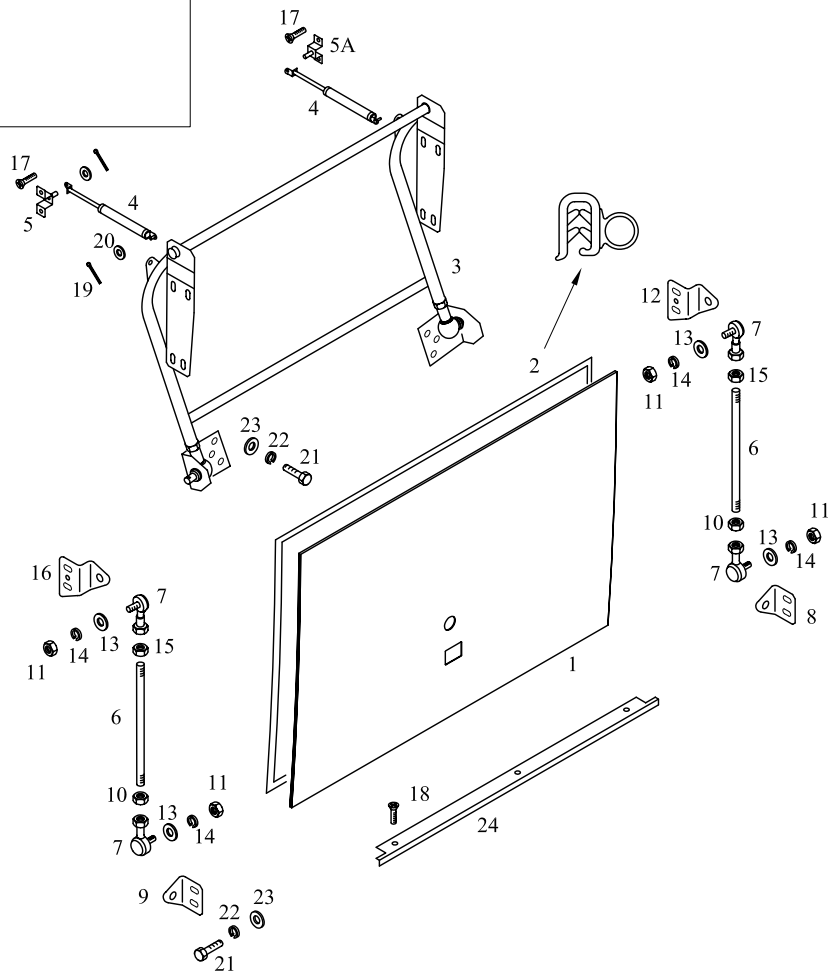

TEMSA	Yan kapak - Happich kilit Side lid - Happich lock Seiten deckeln	Drw.no 62102-97810-18 Vehicle Model: **TB162X, TB162Y** **TB163X, TB163Y**	**28-058** RevDate: Page: 1

Pos	Part Number	Turkish	English	German	Qty	R/P	From	Up To	Original Number Supplier
1	62102-97750-70KY	YAN KAPAK	SIDE LID		1		1		
2	TB112268Y	FİTİL	WEATHER STRIP		mt		1		
3	62102-97160-75Y	BAGAJ KOLU	ARM ASSY HINGE		1		1		
4	62102-70028-01Y	AMORTİSÖR	STAY DAMPER		2		1		
5	62102-11290-77Y	BRAKET	BRAKET		1		1		
5A	62102-70018-01Y	BRAKET	BRAKET		1		1		
6	62102-91570-00Y	ROD	ROD		2		1		
7	62102-61650-01Y	ROTIL	ROD END		2		1		
8	62102-91110-04Y	BRAKET	BRACKET		2		1		
9	62102-91110-05Y	BRAKET	BRACKET		2		1		
10	MS440031Y	SOMUN	NUT		AR		1		
11	MF430005PY	SOMUN	NUT		AR		1		
12	62102-91110-08Y	BRAKET	BRACKET		2		1		
13	MF450005PY	PUL	WASHER PLAIN		AR		1		
14	MF450405Y	RONDELA	WASHER SPRING		AR		1		
15	MF430006Y	SOMUN	NUT		AR		1		
16	62102-91110-12Y	BRAKET	BRACKET		2		1		
17	MC386109	VİDA	SCREW TAPPING		AR		1		
18	MF453615Y	VİDA	SCREW TAPPING		AR		1		
19	MF472037Y	KOPİLYA	PIN SPLIT		AR		1		
20	MF450154Y	PUL	WASHER PLAIN		AR		1		
21	MF100057Y	CIVATA M8*1.25*25	BOLT		AR		1		
22	MF450405Y	RONDELA	WASHER SPRING		AR		1		
23	MF450154Y	PUL	WASHER PLAIN		AR		1		
24	62102-81220-07Y	ALUMİNYUM ÇITA	PLATE EDGE		1		1		
30	62102-97700-70Y	KİLİT	LOCK ASSY		1		1		
31	62102-97710-80Y	KİLİT TELİ	CONNECTING ROD		1		1		
32	62102-97710-70Y	KİLİT TELİ	CONNECTING ROD		1		1		
33	62102-87510-83Y	KİLİT TELİ	CONNECTING ROD		1		1		
35	TU150136Y	ARA PARÇA	SHIM		AR		1		
36	MC324121Y	TUTUCU	STRIKE ASSY		AR		1		
37	MF450404Y	RONDELA	WASHER SPRING		AR		1		
38	MF450004Y	PUL	WASHER PLAIN		AR		1		
39	MF100029Y	CIVATA M6*1*20	BOLT		AR		1		
40	MF453017X	VİDA	SCREW		AR		1		

TEMSA	Yan kapak - Happich kilit Side lid - Happich lock Seiten deckeln	Drw.no 62102-97810-18 Vehicle Model: **TB162X, TB162Y** **TB163X, TB163Y**	**28-058** RevDate: Page: 2

Pos	Part Number	Turkish	English	German	Qty	R/P	From	Up To	Original Number Supplier
41	62102-97710-01Y	PANEL	PANEL		1		1		
42	62102-97710-90Y	PANEL	PANEL		1		1		
43	6020578X	TUTAMAK standart	HANDLE standard	HALTER	1		1		(BBAG_KILIT_02) HAPPICH
43	6020571X	TUTAMAK merkezi kilit	HANDLE central locking	HALTER	1		1		(BBAG_KILIT_03) HAPPICH central lock
46	6020601X	KİLİT KOMPLESİ standart	LOCK ASSY standard	SCHLOSS KOMPLEX	1		1		(BBAG_KILIT_02) HAPPICH
46	6020600X	KİLİT KOMPLESİ merkezi kilit	LOCK ASSY central locking	SCHLOSS KOMPLEX	1		1		(BBAG_KILIT_03) HAPPICH central lock

TEMSA	Yan kapaklar - Happich kilit Side lids - Happich lock Seiten deckeln	Group No : 28-059 Draw. Num. : x Rev. Date : Page : 1
	Vehicle Model: TB162X, TB163X,	

TB162X
TB163X

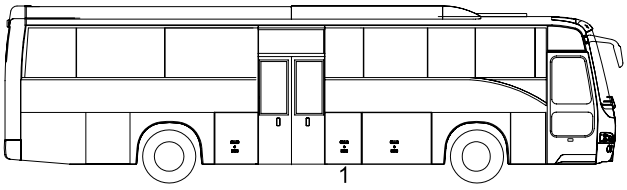

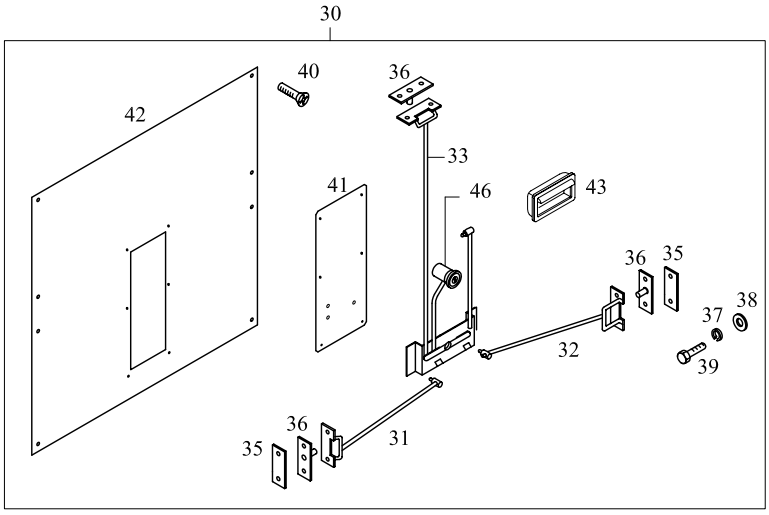

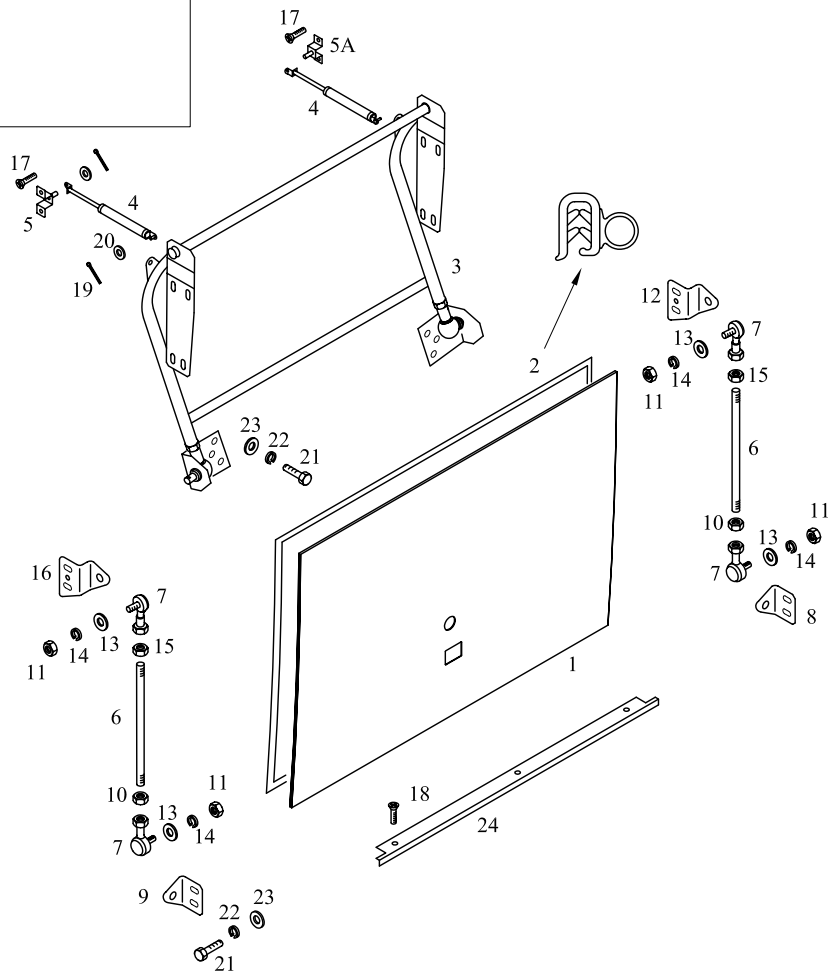

TEMSA	Yan kapak - Happich kilit Side lid - Happich lock Seiten deckeln	Drw.no 62102-98810-04 Vehicle Model: **TB162X** **TB163X**	**28-059** RevDate: Page: 1

Pos	Part Number	Turkish	English	German	Qty	R/P	From	Up To	Original Number Supplier
1	62102-98750-74Y	YAN KAPAK	SIDE LID		1		1		
2	TB112268Y	FİTİL	WEATHER STRIP		mt		1		
3	62102-98160-74Y	BAGAJ KOLU	ARM ASSY HINGE		1		1		
4	62102-70028-01Y	AMORTİSÖR	STAY DAMPER		2		1		
5	62102-11290-77Y	BRAKET	BRAKET		1		1		
5A	62102-70018-01Y	BRAKET	BRAKET		1		1		
6	62102-91570-00Y	ROD	ROD		2		1		
7	62102-61650-01Y	ROTIL	ROD END		2		1		
8	62102-91110-04Y	BRAKET	BRACKET		2		1		
9	62102-91110-05Y	BRAKET	BRACKET		2		1		
10	MS440031Y	SOMUN	NUT		AR		1		
11	MF430005PY	SOMUN	NUT		AR		1		
12	62102-91110-08Y	BRAKET	BRACKET		2		1		
13	MF450005PY	PUL	WASHER PLAIN		AR		1		
14	MF450405Y	RONDELA	WASHER SPRING		AR		1		
15	MF430006Y	SOMUN	NUT		AR		1		
16	62102-91110-12Y	BRAKET	BRACKET		2		1		
17	MC386109	VİDA	SCREW TAPPING		AR		1		
18	MF453615Y	VİDA	SCREW TAPPING		AR		1		
19	MF472037Y	KOPİLYA	PIN SPLIT		AR		1		
20	MF450154Y	PUL	WASHER PLAIN		AR		1		
21	MF100057Y	CIVATA M8*1.25*25	BOLT		AR		1		
22	MF450405Y	RONDELA	WASHER SPRING		AR		1		
23	MF450154Y	PUL	WASHER PLAIN		AR		1		
24	62102-81220-12Y	ALUMİNYUM ÇITA	PLATE EDGE		1		1		
30	62102-98700-73Y	KİLİT	LOCK ASSY		1		1		
31	62102-98710-82Y	KİLİT TELİ	CONNECTING ROD		1		1		
32	62102-98710-72Y	KİLİT TELİ	CONNECTING ROD		1		1		
33	62102-87510-83Y	KİLİT TELİ	CONNECTING ROD		1		1		
35	TU150136Y	ARA PARÇA	SHIM		AR		1		
36	MC324121Y	TUTUCU	STRIKE ASSY		AR		1		
37	MF450404Y	RONDELA	WASHER SPRING		AR		1		
38	MF450004Y	PUL	WASHER PLAIN		AR		1		
39	MF100029Y	CIVATA M6*1*20	BOLT		AR		1		
40	MF453017X	VİDA	SCREW		AR		1		

TEMSA	Yan kapak - Happich kilit Side lid - Happich lock Seiten deckeln	Drw.no 62102-98810-04 Vehicle Model: **TB162X** **TB163X**	**28-059** RevDate: Page: 2

Pos	Part Number	Turkish	English	German	Qty	R/P	From	Up To	Original Number Supplier
41	62102-97710-05Y	PANEL	PANEL		1		1		
42	62102-98510-93Y	PANEL	PANEL		1		1		
43	6020578X	TUTAMAK standart	HANDLE standard	HALTER	1		1		(BBAG_KILIT_02) HAPPICH
43	6020571X	TUTAMAK merkezi kilit	HANDLE central locking	HALTER	1		1		(BBAG_KILIT_03) HAPPICH central lock
46	6020601X	KİLİT KOMPLESİ standart	LOCK ASSY standard	SCHLOSS KOMPLEX	1		1		(BBAG_KILIT_02) HAPPICH
46	6020600X	KİLİT KOMPLESİ merkezi kilit	LOCK ASSY central locking	SCHLOSS KOMPLEX	1		1		(BBAG_KILIT_03) HAPPICH central lock

TEMSA	Yan kapaklar - Happich kilit Side lids - Happich lock Seiten deckeln	Group No : 28-060 Draw. Num. : x Rev. Date : Page : 1
	Vehicle Model: TB162Y, TB163Y	

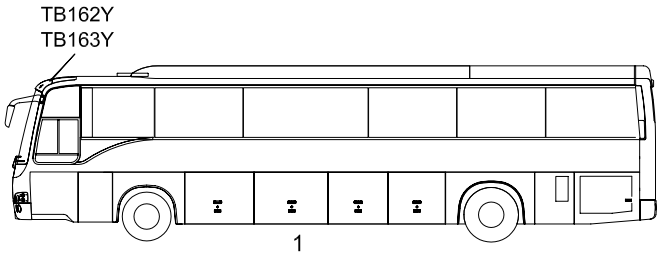

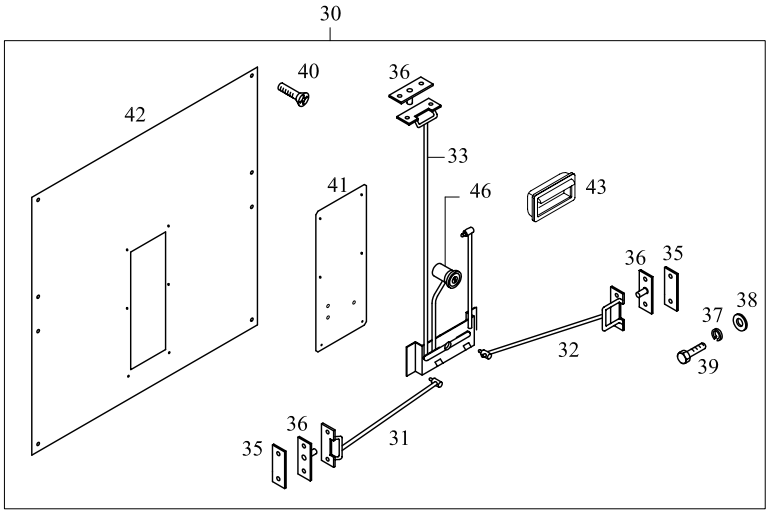

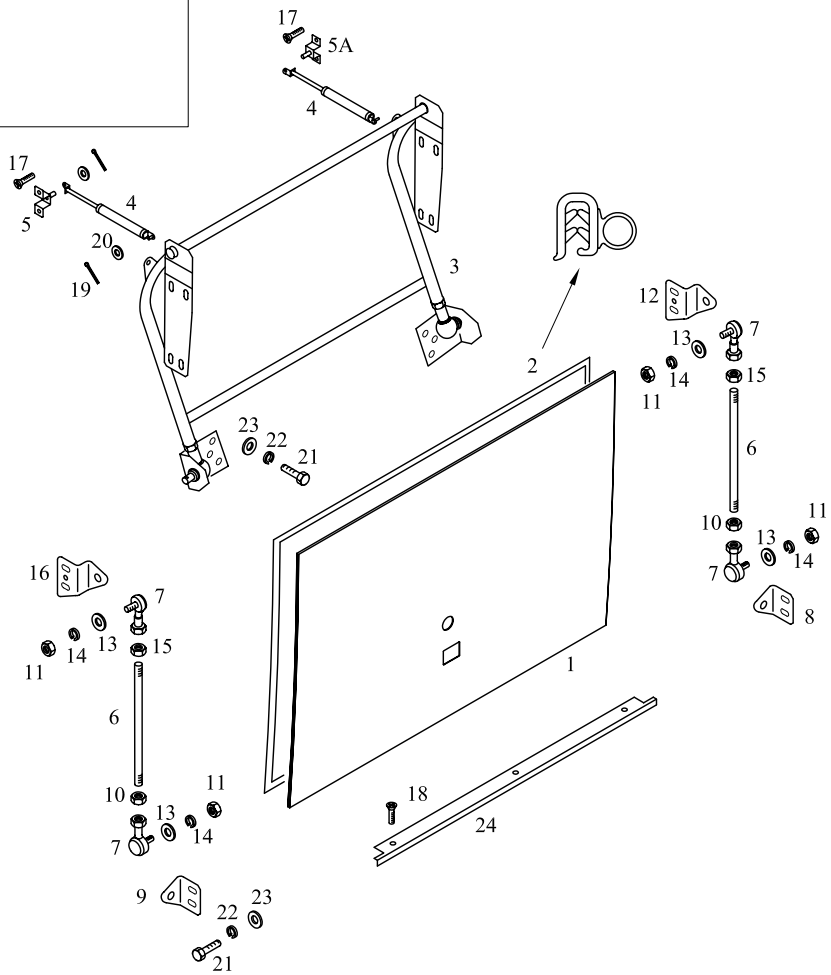

TEMSA	Yan kapak - Happich kilit Side lid - Happich lock Seiten deckeln	Drw.no 62102-99810-01 Vehicle Model: **TB162Y** **TB163Y**	**28-060** RevDate: Page: 1

Pos	Part Number	Turkish	English	German	Qty	R/P	From	Up To	Original Number Supplier
1	62102-98750-72Y	YAN KAPAK	SIDE LID		1		1		
2	TB112268Y	FİTİL	WEATHER STRIP		mt		1		
3	62102-98160-72Y	BAGAJ KOLU	ARM ASSY HINGE		1		1		
4	62102-70028-01Y	AMORTİSÖR	STAY DAMPER		2		1		
5	62102-11290-77Y	BRAKET	BRAKET		1		1		
5A	62102-70018-01Y	BRAKET	BRAKET		1		1		
6	62102-91570-00Y	ROD	ROD		2		1		
7	62102-61650-01Y	ROTIL	ROD END		2		1		
8	62102-91110-04Y	BRAKET	BRACKET		2		1		
9	62102-91110-05Y	BRAKET	BRACKET		2		1		
10	MS440031Y	SOMUN	NUT		AR		1		
11	MF430005PY	SOMUN	NUT		AR		1		
12	62102-91110-08Y	BRAKET	BRACKET		2		1		
13	MF450005PY	PUL	WASHER PLAIN		AR		1		
14	MF450405Y	RONDELA	WASHER SPRING		AR		1		
15	MF430006Y	SOMUN	NUT		AR		1		
16	62102-91110-12Y	BRAKET	BRACKET		2		1		
17	MC386109	VİDA	SCREW TAPPING		AR		1		
18	MF453615Y	VİDA	SCREW TAPPING		AR		1		
19	MF472037Y	KOPİLYA	PIN SPLIT		AR		1		
20	MF450154Y	PUL	WASHER PLAIN		AR		1		
21	MF100057Y	CIVATA M8*1.25*25	BOLT		AR		1		
22	MF450405Y	RONDELA	WASHER SPRING		AR		1		
23	MF450154Y	PUL	WASHER PLAIN		AR		1		
24	62102-81220-13Y	ALUMİNYUM ÇITA	PLATE EDGE		1		1		
30	62102-99700-70Y	KİLİT	LOCK ASSY		1		1		
31	62102-98710-83Y	KİLİT TELİ	CONNECTING ROD		1		1		
32	62102-98710-73Y	KİLİT TELİ	CONNECTING ROD		1		1		
33	62102-87510-83Y	KİLİT TELİ	CONNECTING ROD		1		1		
35	TU150136Y	ARA PARÇA	SHIM		AR		1		
36	MC324121Y	TUTUCU	STRIKE ASSY		AR		1		
37	MF450404Y	RONDELA	WASHER SPRING		AR		1		
38	MF450004Y	PUL	WASHER PLAIN		AR		1		
39	MF100029Y	CIVATA M6*1*20	BOLT		AR		1		
40	MF453017X	VİDA	SCREW		AR		1		

TEMSA	Yan kapak - Happich kilit Side lid - Happich lock Seiten deckeln	Drw.no 62102-99810-01 Vehicle Model: **TB162Y** **TB163Y**	**28-060** RevDate: Page: 1

Pos	Part Number	Turkish	English	German	Qty	R/P	From	Up To	Original Number Supplier
41	62102-97710-05Y	PANEL	PANEL		1		1		
42	62102-98510-94Y	PANEL	PANEL		1		1		
43	6020578X	TUTAMAK standart	HANDLE standard	HALTER	1		1		(BBAG_KILIT_02) HAPPICH
43	6020571X	TUTAMAK merkezi kilit	HANDLE central locking	HALTER	1		1		(BBAG_KILIT_03) HAPPICH central lock
46	6020601X	KİLİT KOMPLESİ standart	LOCK ASSY standard	SCHLOSS KOMPLEX	1		1		(BBAG_KILIT_02) HAPPICH
46	6020600X	KİLİT KOMPLESİ merkezi kilit	LOCK ASSY central locking	SCHLOSS KOMPLEX	1		1		(BBAG_KILIT_03) HAPPICH central lock

TEMSA	Yan kapaklar Side lids Seiten deckeln	Group No : 28-070 Draw. Num. : x Rev. Date : Page : 1
	Vehicle Model: TB162W, TB162Z, TB162X, TB162Y, TB163W, TB163Z, TB163X, TB163Y	

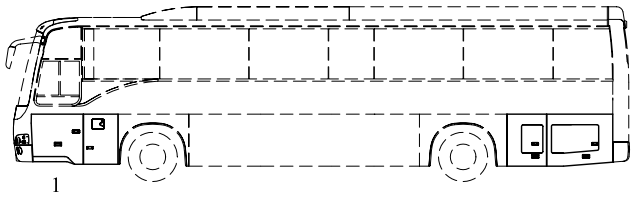

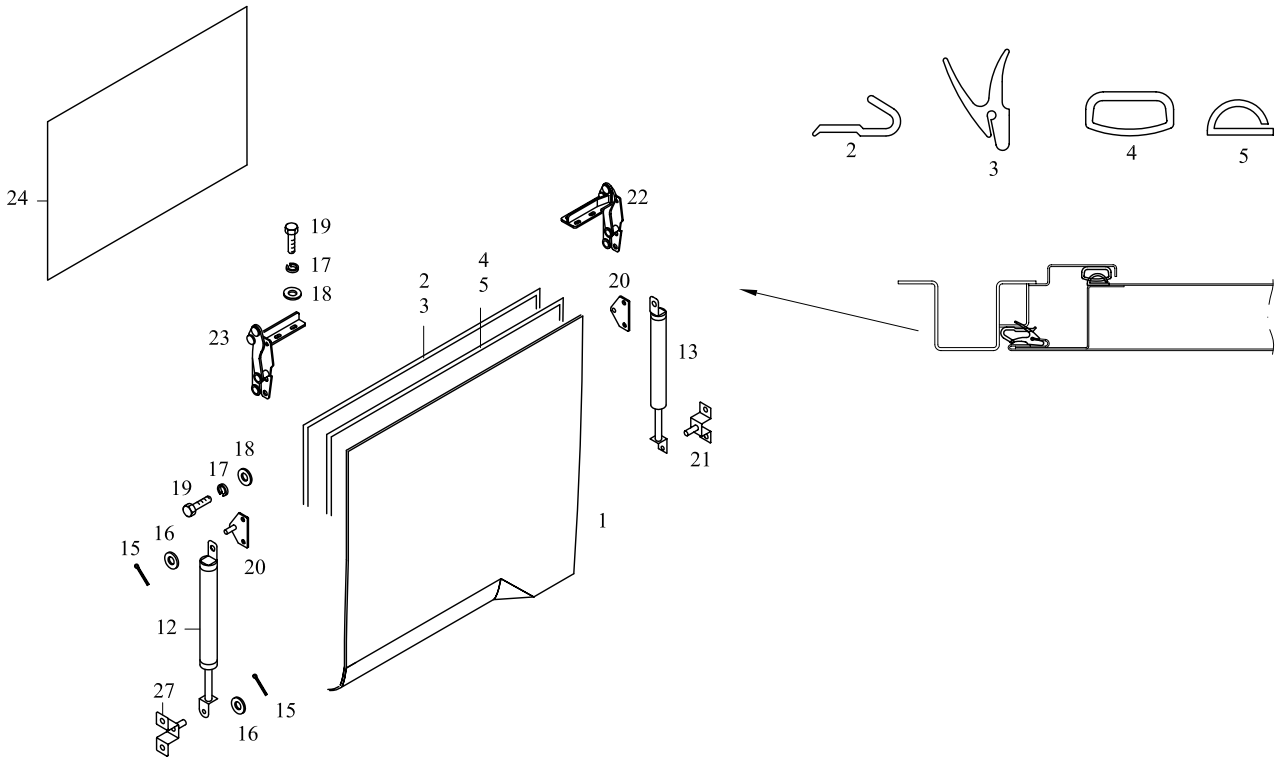

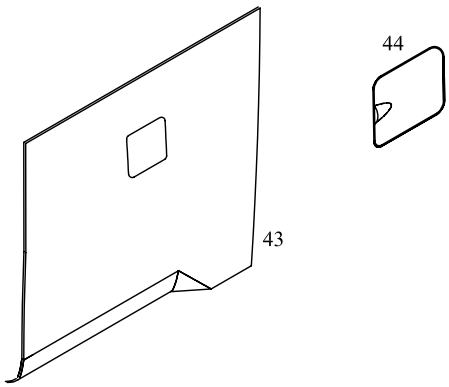

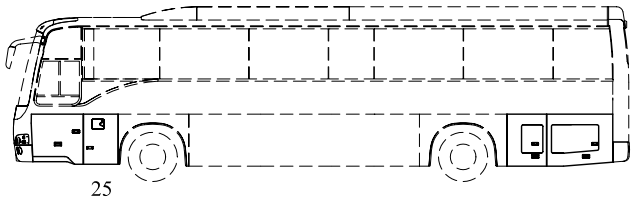
25

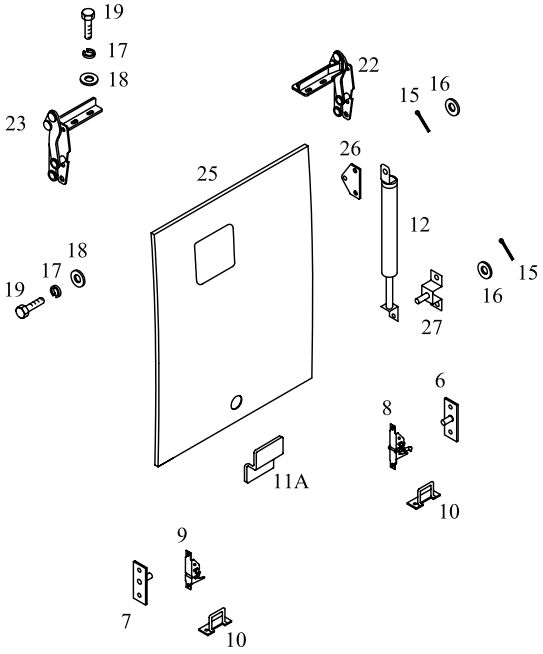
19
17
18
23
22
15
16
26
25
12
18
17
19
15
16
27
6
8
11A
10
9
7
10

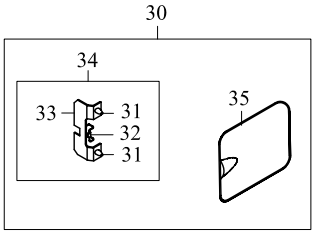
30
34
33
31
32
31
35

TEMSA	Yan kapaklar Side lids Seiten deckeln	Group No : 28-070 Draw. Num. : x Rev. Date : Page : 3
	Vehicle Model: TB162W, TB162Z, TB162X, TB162Y, TB163W, TB163Z, TB163X, TB163Y	

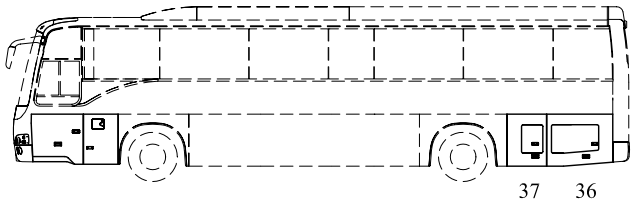

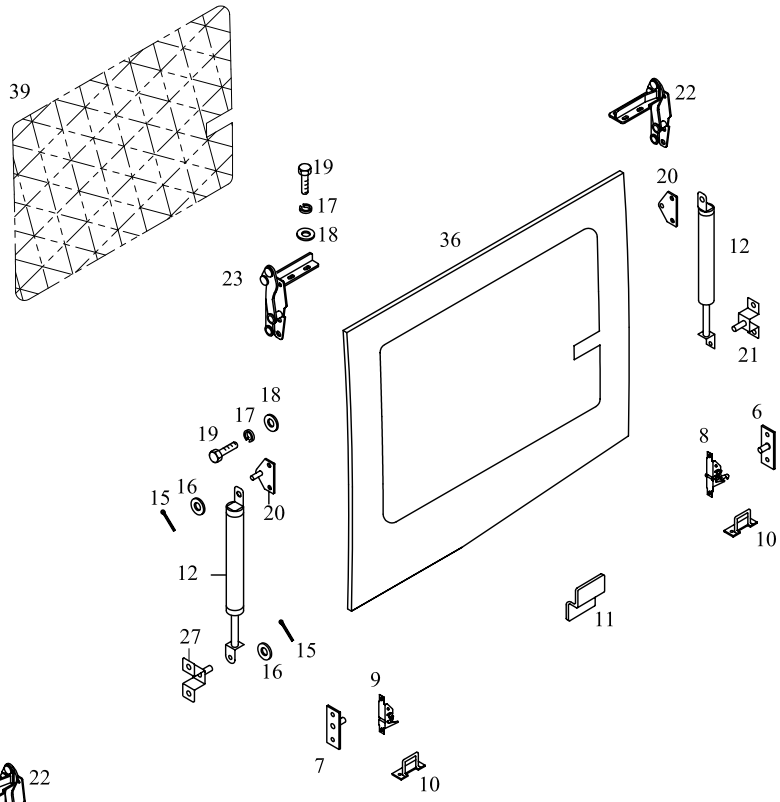

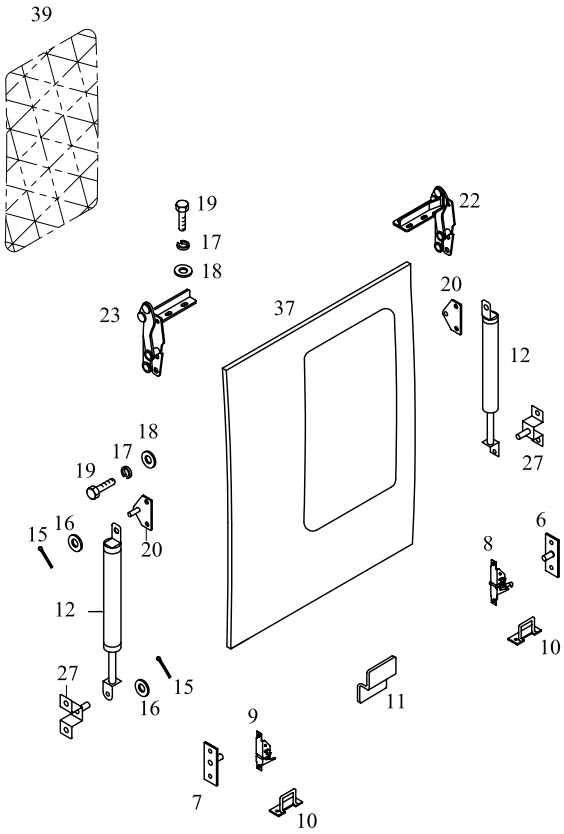

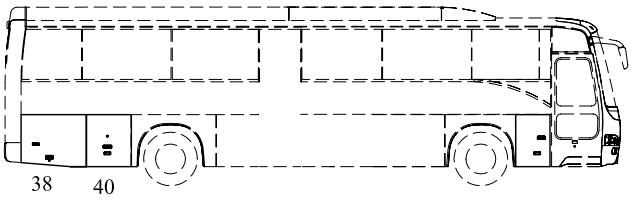
38
40

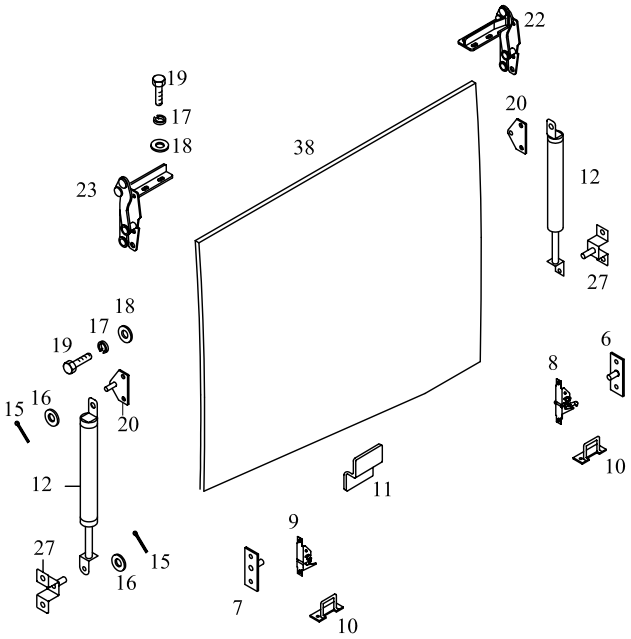
22
19
17
18
38
20
23
12
27
18
17
19
6
8
15
16
20
10
12
11
9
27
15
16
7
10

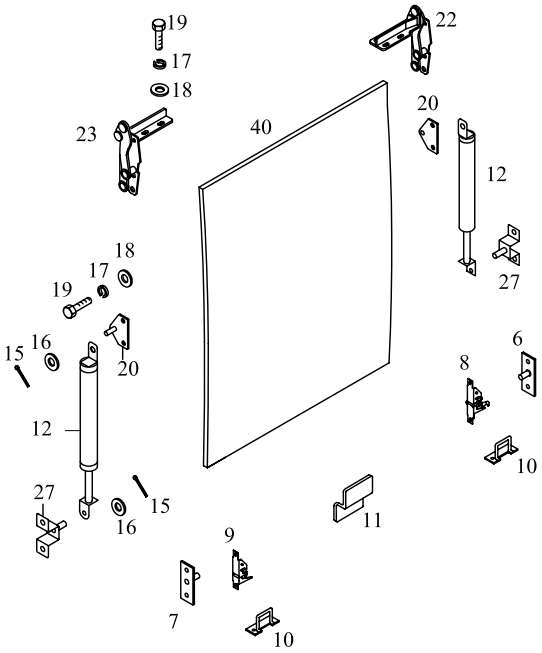
19
22
17
18
20
23
40
12
18
17
27
19
6
15
16
20
8
12
10
27
15
16
11
9
7
10

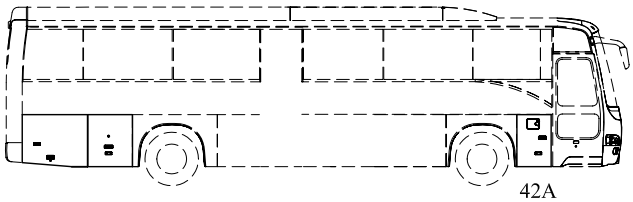
42A

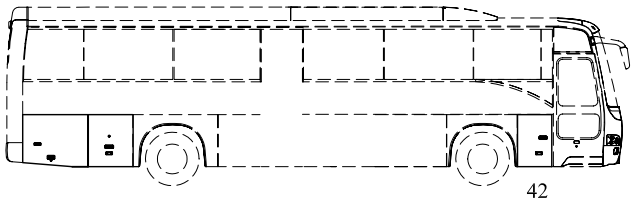
42

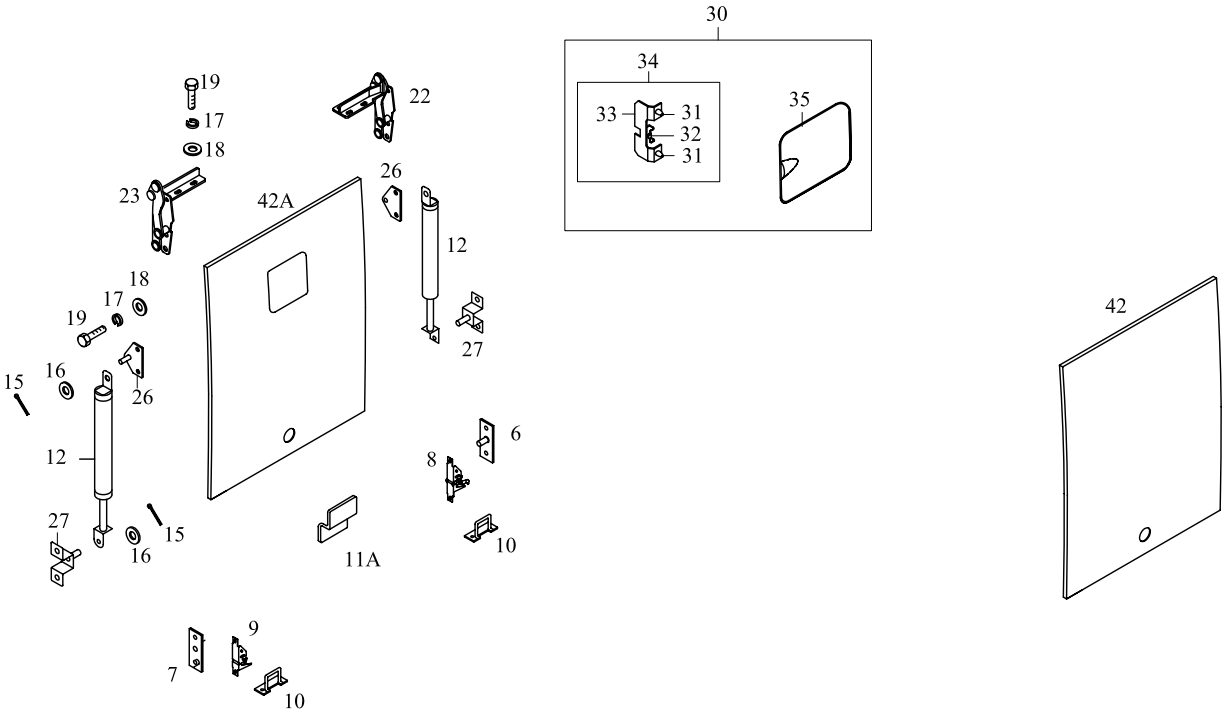
30
34
33
31
32
31
35
19
17
18
22
23
42A
26
12
27
18
17
19
15
16
26
12
27
15
16
6
8
10
11A
9
7
10
42

TEMSA	Yan kapak Side lid Seiten deckeln	Drw.no Vehicle Model: TB162W, TB162Z, TB162X, TB162Y TB163W, TB163Z, TB163X, TB163Y	28-070 RevDate: Page: 1

Pos	Part Number	Turkish	English	German	Qty	R/P	From	Up To	Original Number Supplier
1	62102-71000-70Y	YAN KAPAK	SIDE LID		1		1	?	
1	62102-71000-72Y	YAN KAPAK - ALÜMINYUM	SIDE LID		1		?	150504	
1	62102-71000-72KY	YAN KAPAK - ALÜMINYUM	SIDE LID		1		150504		
2	62102-71050-70Y	FİTİL	WEATHER STRIP		1		1		
3	62102-61040-81Y	FİTİL	WEATHER STRIP		1		1		
4	62102-71060-70Y	FİTİL	WEATHER STRIP		1		1		
5	62102-71040-70Y	FİTİL	WEATHER STRIP		1		1		
6	MC381016Y	TUTUCU	STRIKER		1		1		
7	62102-94100-23Y	TUTUCU	STRIKER		1		1		
8	MC375296Y	KİLİT	LOCK		1		1		
9	MC375615Y	KİLİT	LOCK		1		1		
10	TM150301Y	STOPLAYICI	STOPPER		2		1		
11	62102-80010-22Y	BRAKET	BRACKET		2		1		
11A	62102-96100-01Y	BRAKET	BRACKET		2		1		
11B	62102-96100-01Y	BRAKET	BRACKET		2		1		
12	62102-70028-02Y	AMORTİSÖR	STAY DAMPER		4		1		
13	62102-70028-01Y	AMORTİSÖR	STAY DAMPER		4		1		
15	MF472037Y	KOPİLYA	PIN SPLIT		AR		1		2*18
16	MF450005Y	PUL	WASHER PLAIN		AR		1		A8.5
17	MF450404Y	RONDELA	WASHER SPRING		AR		1		A6
18	MF450004Y	PUL	WASHER PLAIN		AR		1		A6.4
19	MF200079Y	CIVATA	SCREW MACHINE		AR		1		6*20
20	62101-10250-72Y	BRAKET	BRACKET		2		1		
21	MC211383Y	BRAKET	BRACKET		2		1		
22	TC257622Y	MENTEŞE	HINGE ASSY		6		1		
23	TC257623Y	MENTEŞE	HINGE ASSY		6		1		
24	62102-71030-70Y	AL. PANEL	AL. PANEL		1		1		
25	62102-96100-06Y	YAN KAPAK	SIDE LID		1		1	150504	
25	62102-96100-06KY	YAN KAPAK	SIDE LID		1		150504	010205	
25	62102-96100-08Y	YAN KAPAK	SIDE LID		1		010205		
26	62101-10250-72Y	BRAKET	BRACKET		4		1		
27	MC211379Y	BRAKET	BRACKET		4		1		
28	62102-70028-02Y	AMORTİSÖR	STAY DAMPER		2		1		
30	62102-40910-70Y	KAPAK KOMPLE	LID ASSY		1		1		
31	MA141871Y	DAMPER	TUTUCU		2		1		

TEMSA	Yan kapak Side lid Seiten deckeln	Drw.no 62102-96010-70/71 Vehicle Model: **TB162W, TB162Z, TB162X, TB162Y** **TB163W, TB163Z, TB163X, TB163Y**	**28-070** RevDate: Page: 2

Pos	Part Number	Turkish	English	German	Qty	R/P	From	Up To	Original Number Supplier
32	MC236216Y	KANCA	HOOK		1		1		
33	MC236202Y	STOPLAYICI	STOPPER		1		1		
34	MC236201Y	KİLİT KOMPLESİ	LOCK		1		1		
35	62102-40910-20Y	KAPAK	LID		1		1	150504	
35	62102-40910-20KY	KAPAK	LID		1		150504		
36	62102-94100-09Y	YAN KAPAK	SIDE LID		1		1	150504	
36	62102-94100-09KY	YAN KAPAK	SIDE LID		1		150504		
37	62102-94100-08Y	YAN KAPAK	SIDE LID		1		1	150504	
37	62102-94100-18KY	YAN KAPAK	SIDE LID		1		150504		
38	62102-94100-11Y	YAN KAPAK	SIDE LID		1		1	150504	
38	62102-94100-11KY	YAN KAPAK	SIDE LID		1		150504		
39	62102-94110-00Y	TEL IZGARA	GRILLE		MT		1		
40	62102-94100-10Y	YAN KAPAK	SIDE LID		1		1	150504	
40	62102-94100-10KY	YAN KAPAK	SIDE LID		1		150504		
41	62102-70028-02Y	AMORTİSÖR	STAY DAMPER		2		1		
42	62102-96100-05Y	YAN KAPAK	SIDE LID		1		1	010205	
42A	62102-96100-09Y	YAN KAPAK	SIDE LID		1		010205		
43	62102-96050-70Y	YAN KAPAK	SIDE LID		1		1		OPTION
44	61714-96000-70Y	KAPAK- SU TANKI	LID , WASHER TANK		1		1		OPTION

TEMSA	Çamurluk kapakları Fender lids Kotflügel Deckeln	Group No : 28-075 Draw. Num. : x Rev. Date : Page : 1
	Vehicle Model: TB162W, TB162Z, TB162X, TB162Y, TB163W, TB163Z, TB163X, TB163Y	

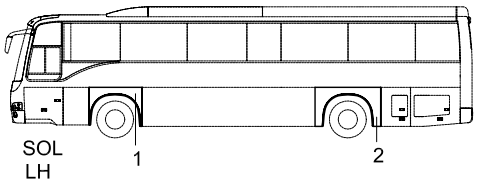

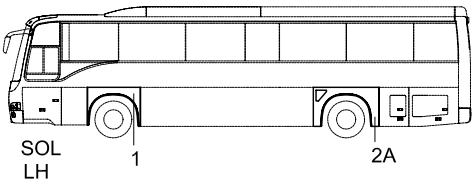

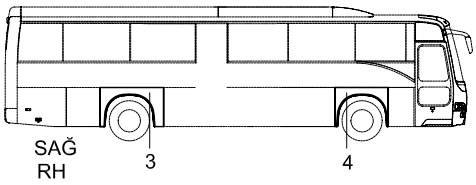

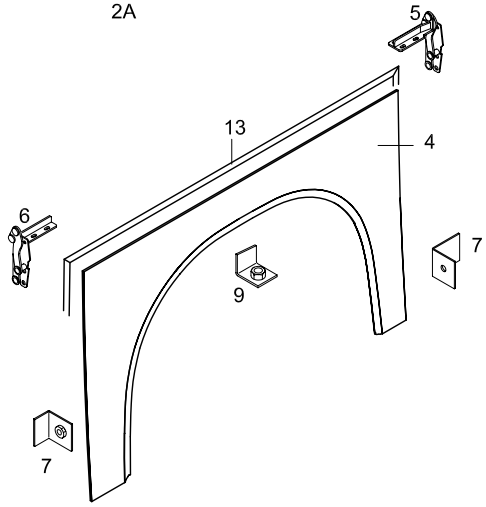

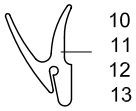

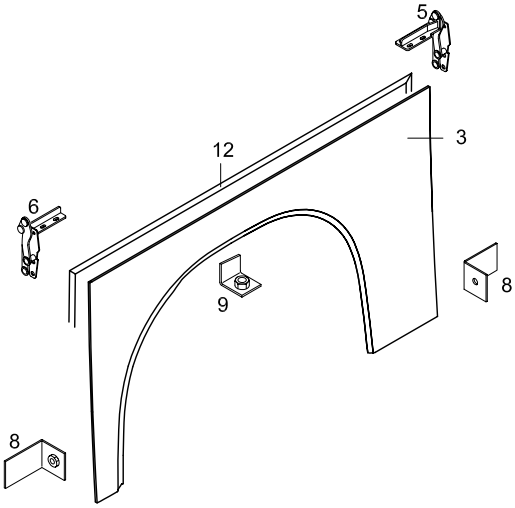

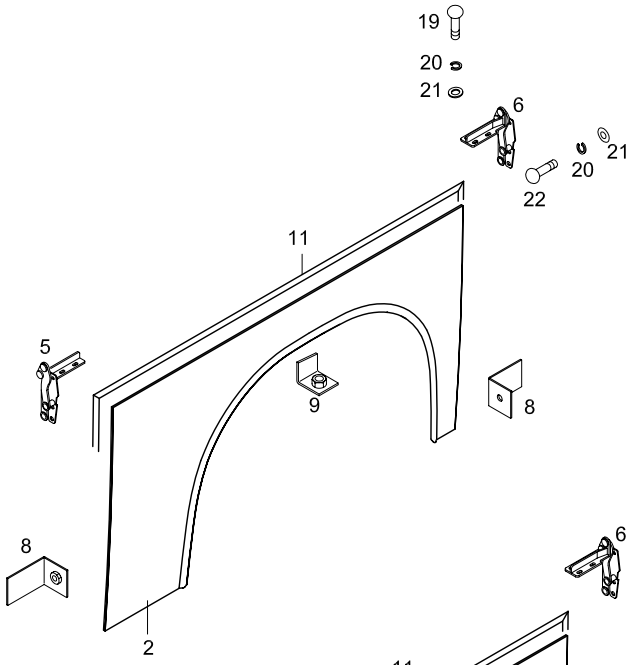

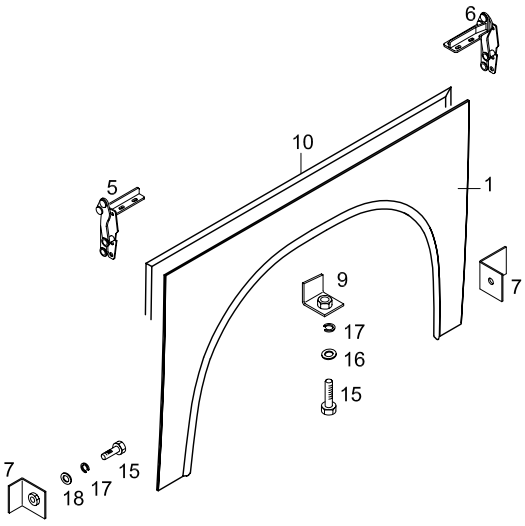

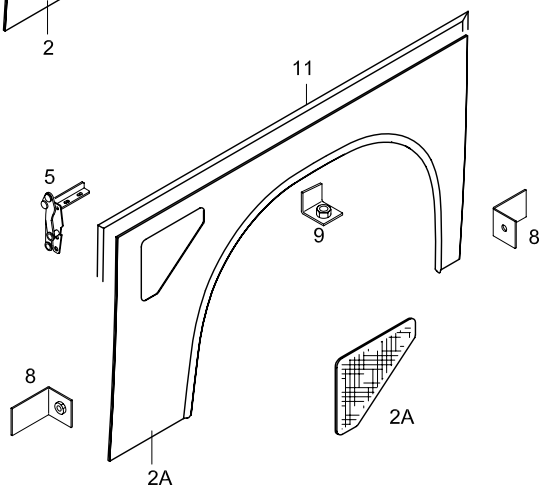

TEMSA	Çamurluk kapakları Fender lids Kotflügel Deckeln	Drw.no 62102-94020-72Y Vehicle Model: **TB162W, TB162Z, TB162X, TB162Y** **TB163W, TB163Z, TB163X, TB163Y**	**28-075** RevDate: Page: 1

Pos	Part Number	Turkish	English	German	Qty	R/P	From	Up To	Original Number Supplier
1	62102-94000-70Y	SOL ÖN ÇAMURLUK	FENDER ASSY (LH-FR)		1		1	150504	
1	62102-94000-73Y	SOL ÖN ÇAMURLUK	FENDER ASSY (LH-FR)		1		150504		
2	62102-94010-70Y	SOL ARKA ÇAMURLUK	FENDER ASSY (LH-RR)		1		1	150504	
2A	62102-94010-72Y	SOL ARKA ÇAMURLUK	FENDER ASSY (LH-RR)		1		150504		
3	62102-94010-71Y	SAĞ ARKA ÇAMURLUK	FENDER ASSY (RH-RR)		1		1		
4	62102-94000-72Y	SAĞ ÖN ÇAMURLUK	FENDER ASSY (RH-FR)		1		1		
5	TC257622Y	MENTEŞE KOMPLE	HINGE ASSY		4		1		
6	TC257623Y	MENTEŞE KOMPLE	HINGE ASSY		4		1		
7	62102-40520-70Y	BRAKET	BRACKET		4		1		
8	62102-94020-01Y	BRAKET	BRACKET		4		1		
9	62101-10700-02Y	BRAKET	BRACKET		4		1		
10	62102-41040-01Y	FİTİL	WEATHER STRIP		1		1		
11	62102-41040-02Y	FİTİL	WEATHER STRIP		1		1		
12	62102-41040-03Y	FİTİL	WEATHER STRIP		1		1		
13	62102-41040-04Y	FİTİL	WEATHER STRIP		1		1		
15	MC204625Y	VİDA	SCREW		12		1		
16	MF450005Y	PUL	WASHER PLAIN		4		1		
17	MF450405Y	RONDELA	WASHER SPRING		12		1		
18	MF450154Y	PUL	WASHER PLAIN		8		1		
19	MF200079Y	VİDA	SCREW		8		1		
20	MF450404Y	RONDELA	WASHER SPRING		14		1		
21	MF450004Y	PUL	WASHER PLAIN		14		1		
22	MC386109Y	VİDA	SCREW		AR		1		
23	62102-94020-02Y	HAVA EMİŞ IZGARASI	AIR INLET GRILLE		1		150504		

TEMSA	Motor bakım kapağı Engine inspection lid Motor Wartungsdeckel	Group No : 28-080 Draw. Num. : x Rev. Date : Page : 1
	Vehicle Model: TB162W, TB162Z, TB162X, TB162Y, TB163W, TB163Z, TB163X, TB163Y	

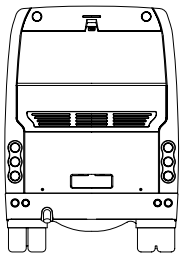

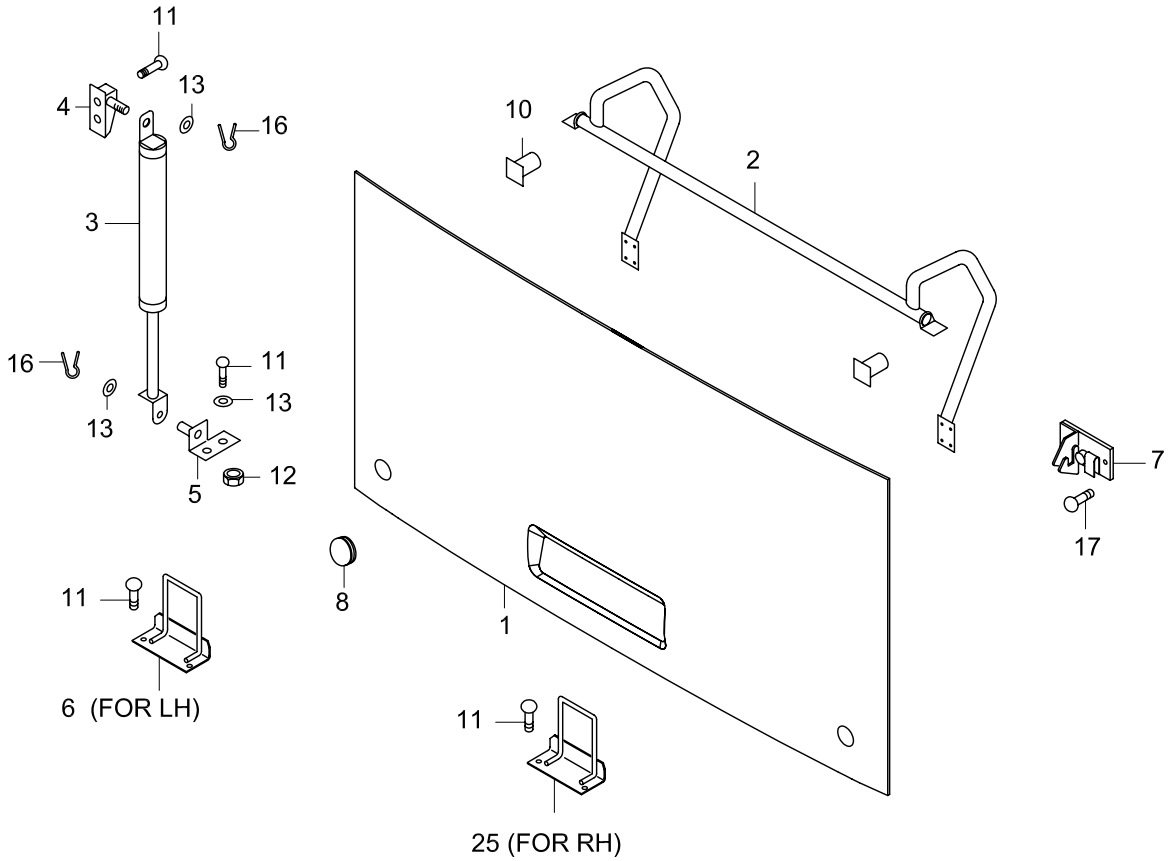

TEMSA	Motor bakım kapağı Engine inspection lid Motor Wartungsdeckel	Drw.no 62205-90250-70/-90250-80 Vehicle Model: **TB162W, TB162Z, TB162X, TB162Y** **TB163W, TB163Z, TB163X, TB163Y**	**28-080** RevDate: Page: 1

Pos	Part Number	Turkish	English	German	Qty	R/P	From	Up To	Original Number Supplier
1	62204-90260-90HY	ARKA KAPAK	REAR LID		1		1		
2	62204-90270-70Y	MENTEŞE KOLU	ARM ASSY HINGE		1		1		
3	62204-90260-71Y	AMORTİSÖR	STAY DAMPER		2		1		
4	62204-90250-01AY	BRAKET	BRACKET		2		1		
5	62204-90260-72Y	BRAKET	BRACKET		2		1		
6	62204-90260-73Y	KİLİT SAĞ	STRIKER RH		1		1		
7	MC375615Y	KİLİT	STRIKER		2		1		
8	62102-60890-01Y	ARA PARÇA	SPACER		2		1		
10	62204-90250-03Y	DAYAMA	SUPPORT		2		1		
11	MF100055Y	CIVATA	BOLT		AR		1		M8*1.25*20
12	MF430005Y	SOMUN	NUT		AR		1		M8
13	MF450005Y	PUL	WASHER PLAIN		AR		1		A8.5
16	MF472024Y	KOPİLYA	PIN SPLIT		AR		1		1.6*15
17	MF200077Y	VİDA	SCREW MACHINE		AR		1		6*15
25	62204-90260-74Y	KİLİT SOL	STRIKER LH		1		1		

TEMSA	Sürücü bölmesi kapısı Drivers Compartment Lid Fahrerklappen	Group No : 28-085 Draw. Num. : x Rev. Date :
	Vehicle Model: TB162X, TB162Y, TB163X, TB163Y	Page : 1

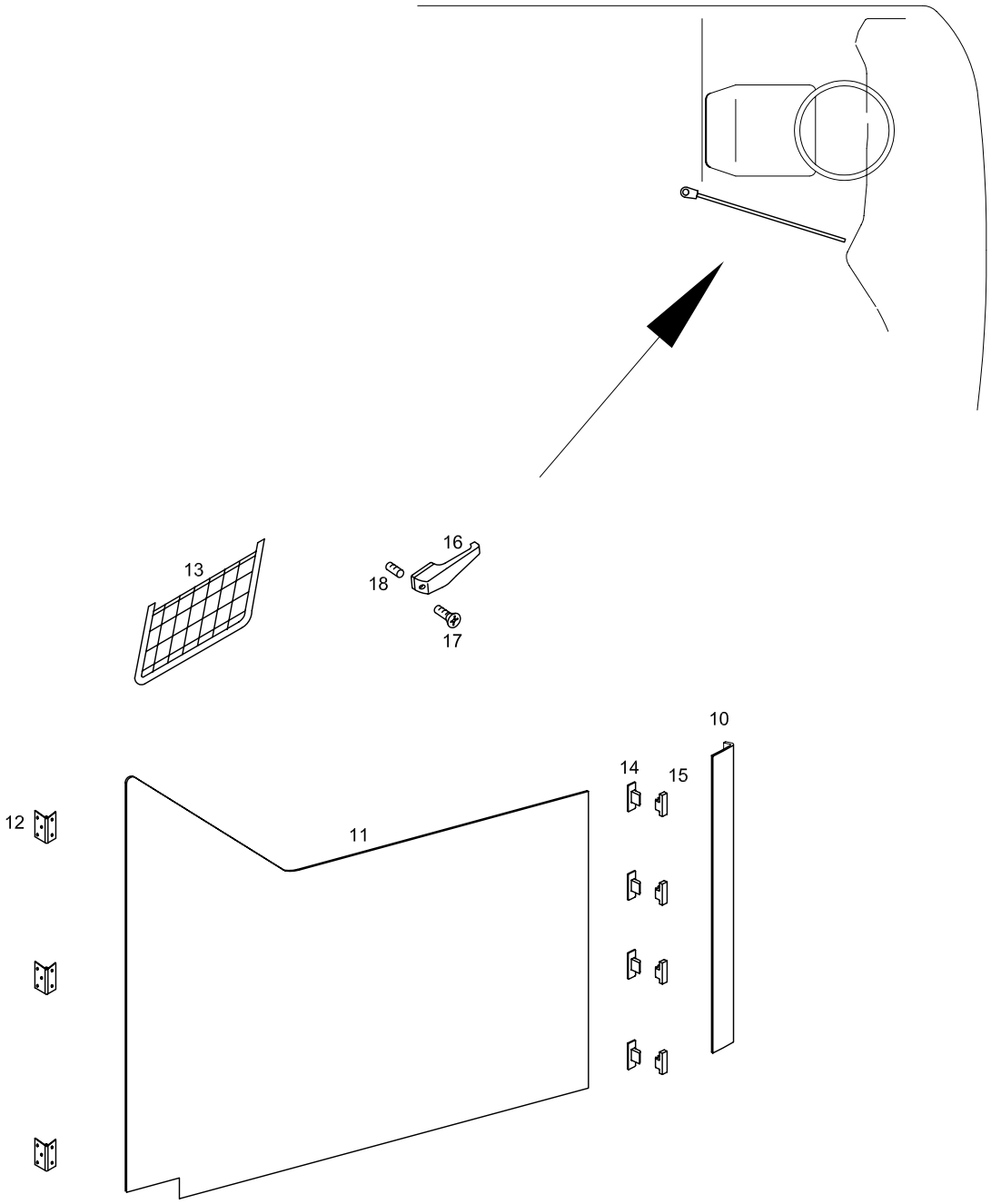

TEMSA	Sürücü bölmesi kapısı Drivers Compartment Lid Fahrerklappen	Drw.no: Vehicle Model: TB162X, TB162Y TB163X, TB163Y	28-085 RevDate: Page: 1

Pos	Part Number	Turkish	English	German	Qty	R/P	From	Up To	Original Number Supplier
10	62079-99000-21Y	SÜRÜCÜ BÖLMESİ KARKASI	FRAME, DRIVERS PARTITION		1		300704		
11	62079-99000-20Y	SÜRÜCÜ BÖLMESİ KAPISI	DOOR, DRIVERS PARTITION		1		300704		
12	HI01-00-048-41Y	MENTEŞE	HINGE		3		300704		
13	63258-30120-70Y	FİLELİ CEP	DOCUMENT NET		1		300704		
14	62079-99000-28Y	TUTUCU	STRIKER		4		300704		
15	62079-99000-27Y	STOPLAYICI	STOPPER		1		300704		
16	600N046Y	TUTAMAK	HANDLE		1		300704		HAPPICH
17	62079-99000-26Y	DÜBEL	SEAT		4		300704		
18	MF201556Y	VİDA M5*30	SCREW		AR		300704		

TEMSA	Kilit Lock Schloss	Group No : 28-090 Draw. Num. : x Rev. Date : Page : 1
	Vehicle Model: TB162W, TB163W,	

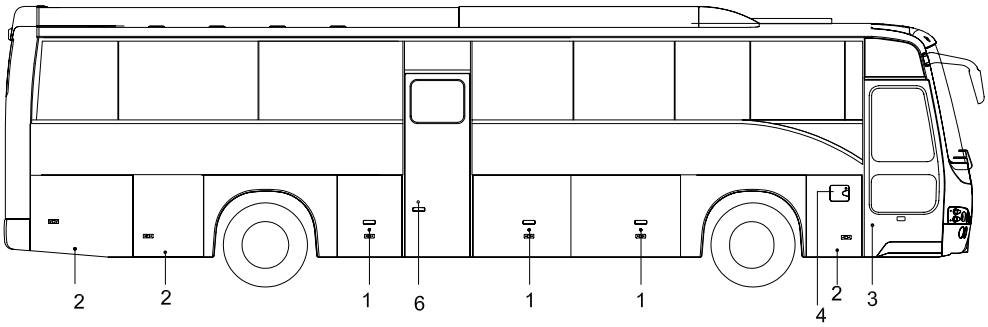

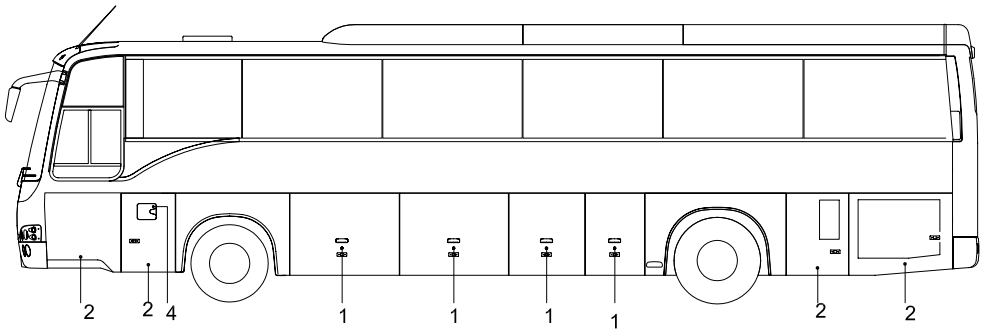

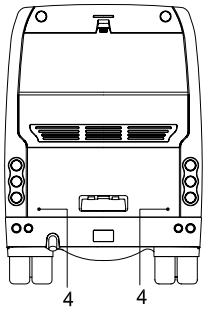

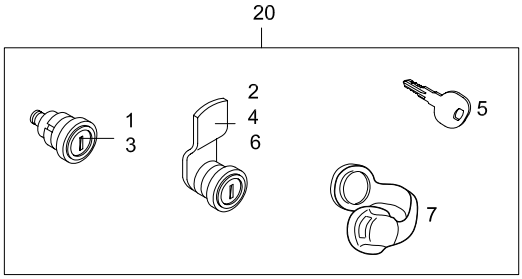

BBAG_KILIT_01

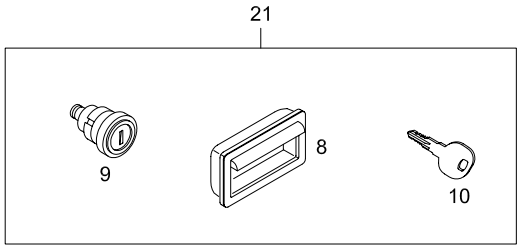

BBAG_KILIT_02 (HAPPICH - STANDARD)

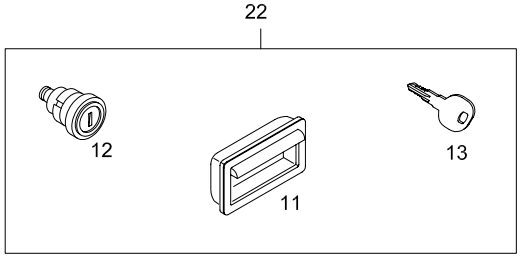

BBAG_KILIT_03 (HAPPICH CENTRAL LOCKING)

TEMSA	Kilit Lock Schloss	Drw.no: Vehicle Model: **TB162W** **TB163W**	**28-090** RevDate: Page: 1

Pos	Part Number	Turkish	English	German	Qty	R/P	From	Up To	Original Number Supplier
1	62102-94200-01X	KİLİT	LOCK	SCHLOSS	7		1		BBAG_KILIT_01
2	62102-60890-70X	KİLİT	LOCK	SCHLOSS	7		1		BBAG_KILIT_01
3	62102-70047-72X	KİLİT	LOCK	SCHLOSS	1		1		BBAG_KILIT_01
4	62102-70047-71X	KİLİT	LOCK	SCHLOSS	3		1		BBAG_KILIT_01
5	62102-70027-05X	ANAHTAR	KEY	SCHLÜSSEL	3		1		BBAG_KILIT_01
6	TY150119X	KİLİT	LOCK	SCHLOSS	1		1		BBAG_KILIT_01
7	62102-60890-02X	KİLİT KAPAĞI	CAP LOCK		AR		1		BBAG_KILIT_01
8	6020578X	TUTAMAK	HANDLE	HALTER	7		150404		BBAG_KILIT_02 HAPPICH STD
9	6020601X	KİLİT	LOCK	SCHLOSS	7		150404		BBAG_KILIT_02 HAPPICH STD
10	6020621X	ANAHTAR	KEY	SCHLÜSSEL	3		150404		BBAG_KILIT_02 HAPPICH STD
11	6020571X	TUTAMAK	HANDLE	HALTER	7		150404		BBAG_KILIT_03 HAPPICH CENTLOCK
12	6020600X	KİLİT	LOCK	SCHLOSS	7		150404		BBAG_KILIT_03 HAPPICH CENTLOCK
13	6020620X	ANAHTAR	KEY	SCHLÜSSEL	2		150404		BBAG_KILIT_03 HAPPICH CENTLOCK
20	62102-96020-71Y	KİLİT SETİ	LOCK SET	SCHLOSS SET	SET		1		BBAG_KILIT_01 NORMAL
20	62102-96020-72Y	KİLİT SETİ	LOCK SET secret code	SCHLOSS SET	SET		1		BBAG_KILIT_01 secret code
20	62102-91030-73Y	KİLİT SETİ	LOCK SET secret code random	SCHLOSS SET	SET		1		BBAG_KILIT_01 secret code random
21	62102-98020-72Y	KİLİT SETİ - HAPPICH STANDARD	LOCK SET - HAPPICH STANDARD	SCHLOSS SET	SET		150404		BBAG_KILIT_02 HAPPICH STD
22	62102-91030-71Y	KİLİT SETİ - HAPPICH MERKEZİ KİLİT	LOCK SET - HAPPICH CENTRAL LOCKING	SCHLOSS SET	SET		150404		BBAG_KILIT_03 HAPPICH CENTLOCK

TEMSA	Kilit Lock Schloss	Group No : 28-091 Draw. Num. : x Rev. Date : Page : 1
	Vehicle Model: TB162Z, TB163Z,	

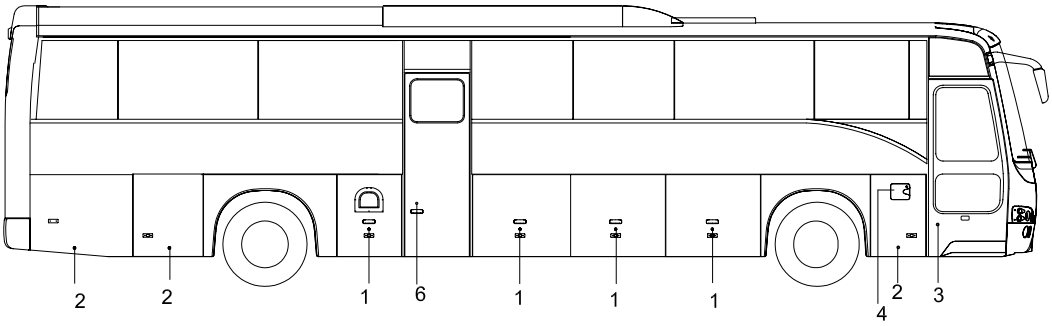

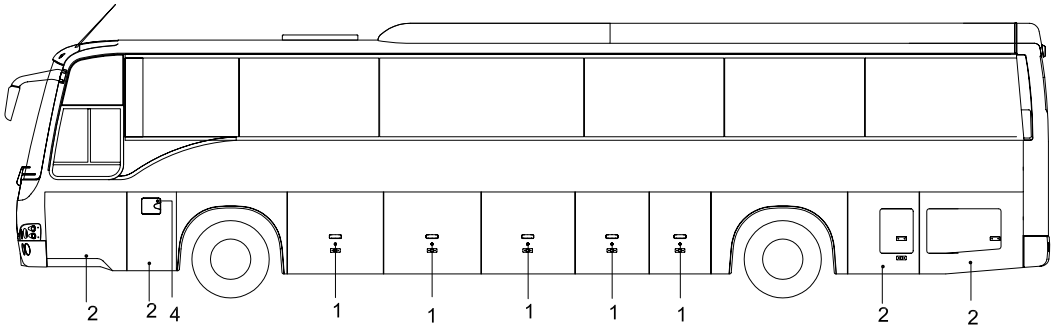

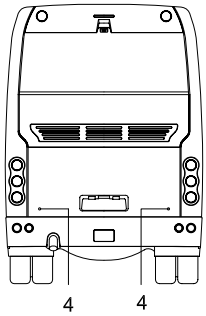

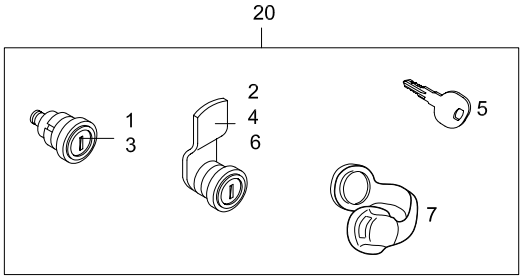

BBAG_KILIT_01

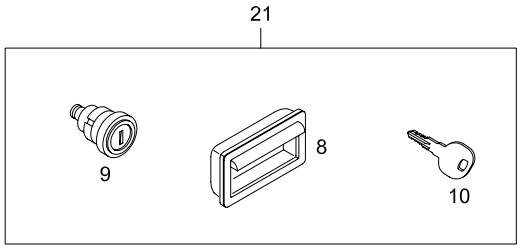

BBAG_KILIT_02 (HAPPICH - STANDARD)

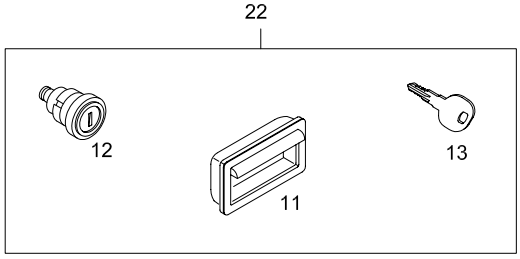

BBAG_KILIT_03 (HAPPICH CENTRAL LOCKING)

TEMSA	Kilit Lock Schloss	Drw.no: Vehicle Model: **TB162Z** **TB163Z**	**28-091** RevDate: Page: 1

Pos	Part Number	Turkish	English	German	Qty	R/P	From	Up To	Original Number Supplier
1	62102-94200-01X	KİLİT	LOCK	SCHLOSS	7		1		BBAG_KILIT_01
2	62102-60890-70X	KİLİT	LOCK	SCHLOSS	7		1		BBAG_KILIT_01
3	62102-70047-72X	KİLİT	LOCK	SCHLOSS	1		1		BBAG_KILIT_01
4	62102-70047-71X	KİLİT	LOCK	SCHLOSS	3		1		BBAG_KILIT_01
5	62102-70027-05X	ANAHTAR	KEY	SCHLÜSSEL	3		1		BBAG_KILIT_01
6	TY150119X	KİLİT	LOCK	SCHLOSS	1		1		BBAG_KILIT_01
7	62102-60890-02X	KİLİT KAPAĞI	CAP LOCK		AR		1		BBAG_KILIT_01
8	6020578X	TUTAMAK	HANDLE	HALTER	7		150404		BBAG_KILIT_02 HAPPICH STD
9	6020601X	KİLİT	LOCK	SCHLOSS	7		150404		BBAG_KILIT_02 HAPPICH STD
10	6020621X	ANAHTAR	KEY	SCHLÜSSEL	3		150404		BBAG_KILIT_02 HAPPICH STD
11	6020571X	TUTAMAK	HANDLE	HALTER	7		150404		BBAG_KILIT_03 HAPPICH CENTLOCK
12	6020600X	KİLİT	LOCK	SCHLOSS	7		150404		BBAG_KILIT_03 HAPPICH CENTLOCK
13	6020620X	ANAHTAR	KEY	SCHLÜSSEL	2		150404		BBAG_KILIT_03 HAPPICH CENTLOCK
20	62102-97020-71Y	KİLİT SETİ	LOCK SET	SCHLOSS SET	SET		1		BBAG_KILIT_01 NORMAL
20	62102-97020-72Y	KİLİT SETİ	LOCK SET secret code	SCHLOSS SET	SET		1		BBAG_KILIT_01 secret code
20	62102-91030-73Y	KİLİT SETİ	LOCK SET secret code random	SCHLOSS SET	SET		1		BBAG_KILIT_01 secret code random
21	62102-91030-72Y	KİLİT SETİ - HAPPICH STANDARD	LOCK SET - HAPPICH STANDARD	SCHLOSS SET	SET		150404		BBAG_KILIT_02 HAPPICH STD
22	62102-91030-81Y	KİLİT SETİ - HAPPICH MERKEZİ KİLİT	LOCK SET - HAPPICH CENTRAL LOCKING	SCHLOSS SET	SET		150404		BBAG_KILIT_03 HAPPICH CENTLOCK

TEMSA	Kilit Lock Schloss	Group No : 28-092 Draw. Num. : x Rev. Date : Page : 1
	Vehicle Model: TB162X, TB163X,	

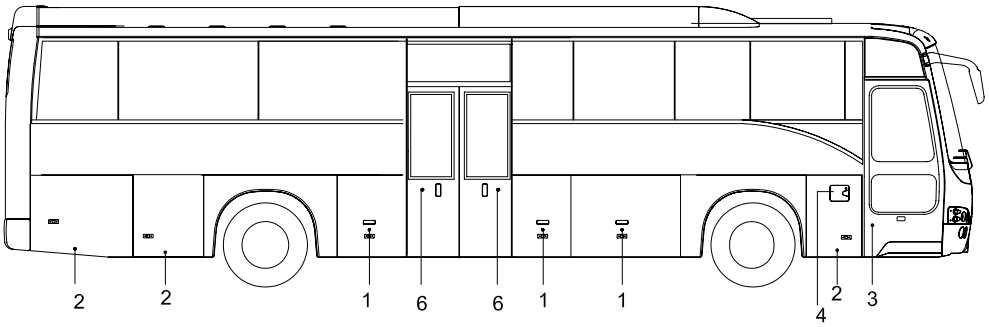

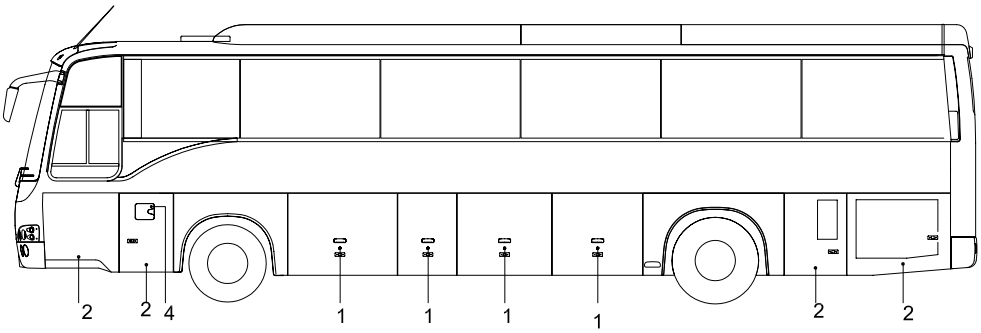

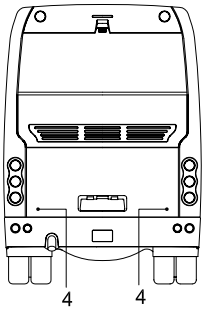

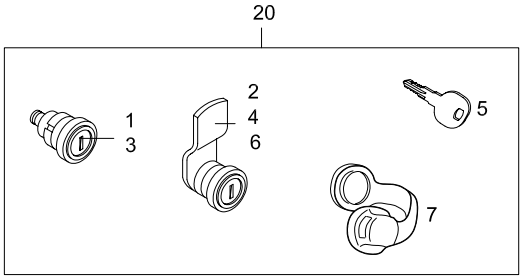

BBAG_KILIT_01

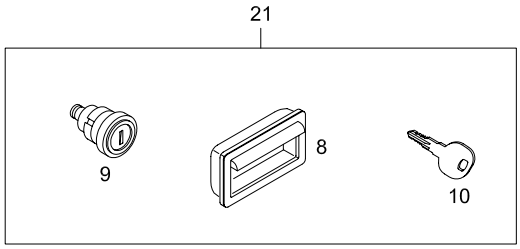

BBAG_KILIT_02 (HAPPICH - STANDARD)

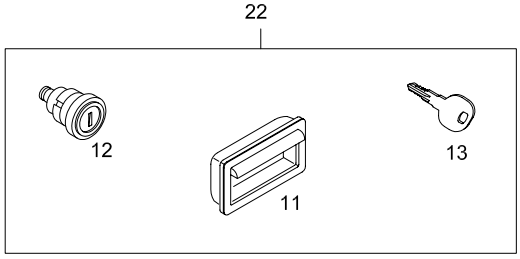

BBAG_KILIT_03 (HAPPICH CENTRAL LOCKING)

TEMSA	Kilit Lock Schloss	Drw.no: Vehicle Model: **TB162X** **TB163X**	**28-092** RevDate: Page: 1

Pos	Part Number	Turkish	English	German	Qty	R/P	From	Up To	Original Number Supplier
1	62102-94200-01X	KİLİT	LOCK	SCHLOSS	7		1		BBAG_KILIT_01
2	62102-60890-70X	KİLİT	LOCK	SCHLOSS	7		1		BBAG_KILIT_01
3	62102-70047-72X	KİLİT	LOCK	SCHLOSS	1		1		BBAG_KILIT_01
4	62102-70047-71X	KİLİT	LOCK	SCHLOSS	3		1		BBAG_KILIT_01
5	62102-70027-05X	ANAHTAR	KEY	SCHLÜSSEL	3		1		BBAG_KILIT_01
6	TY150119X	KİLİT	LOCK	SCHLOSS	1		1		BBAG_KILIT_01
7	62102-60890-02X	KİLİT KAPAĞI	CAP LOCK		AR		1		BBAG_KILIT_01
8	6020578X	TUTAMAK	HANDLE	HALTER	7		150404		BBAG_KILIT_02 HAPPICH STD
9	6020601X	KİLİT	LOCK	SCHLOSS	7		150404		BBAG_KILIT_02 HAPPICH STD
10	6020621X	ANAHTAR	KEY	SCHLÜSSEL	3		150404		BBAG_KILIT_02 HAPPICH STD
11	6020571X	TUTAMAK	HANDLE	HALTER	7		150404		BBAG_KILIT_03 HAPPICH CENTLOCK
12	6020600X	KİLİT	LOCK	SCHLOSS	7		150404		BBAG_KILIT_03 HAPPICH CENTLOCK
13	6020620X	ANAHTAR	KEY	SCHLÜSSEL	2		150404		BBAG_KILIT_03 HAPPICH CENTLOCK
20	62102-98020-71Y	KİLİT SETİ	LOCK SET secret code random	SCHLOSS SET	SET		1		BBAG_KILIT_01 secret code random
21	62102-98020-72Y	KİLİT SETİ - HAPPICH STANDARD	LOCK SET - HAPPICH STANDARD	SCHLOSS SET	SET		150404		BBAG_KILIT_02 HAPPICH STD
22	62102-91030-71Y	KİLİT SETİ - HAPPICH MERKEZİ KİLİT	LOCK SET - HAPPICH CENTRAL LOCKING	SCHLOSS SET	SET		150404		BBAG_KILIT_03 HAPPICH CENTLOCK

TEMSA	Kilit Lock Schloss	Group No : 28-093 Draw. Num. : x Rev. Date : Page : 1
	Vehicle Model: TB162Y, TB163Y	

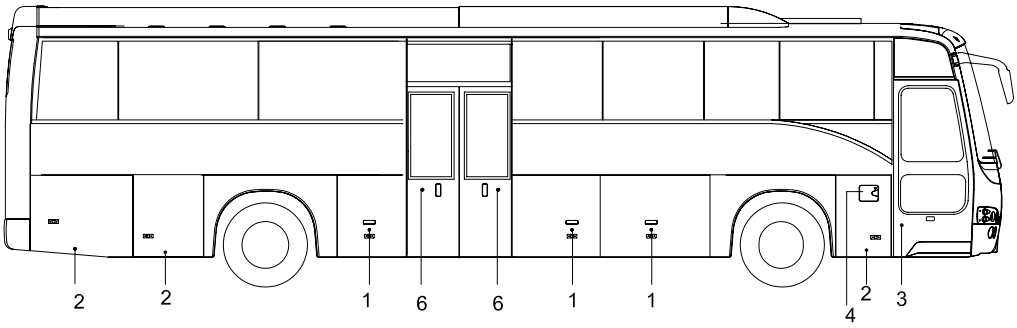

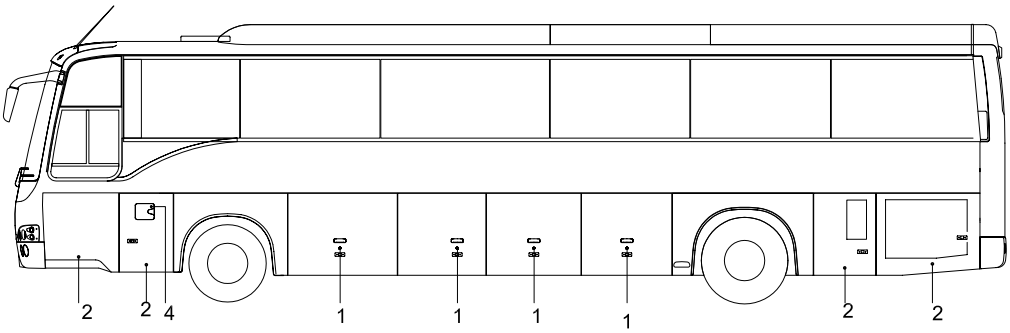

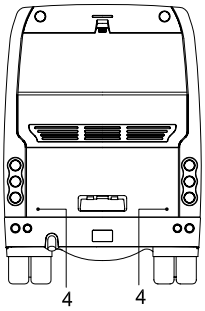

20

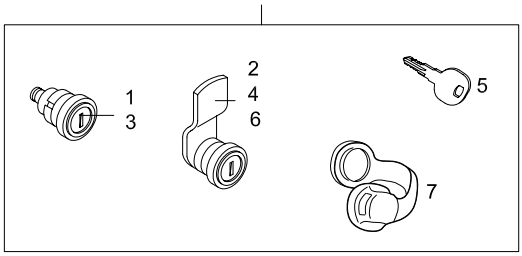

BBAG_KILIT_01

21

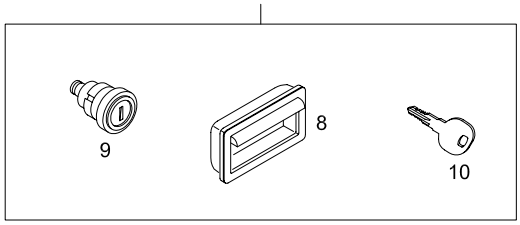

BBAG_KILIT_02 (HAPPICH - STANDARD)

22

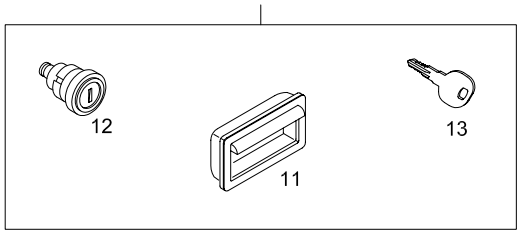

BBAG_KILIT_03 (HAPPICH CENTRAL LOCKING)

TEMSA	Kilit Lock Schloss	Drw.no: Vehicle Model: **TB162Y** **TB163Y**	**28-093** RevDate: Page: 1

Pos	Part Number	Turkish	English	German	Qty	R/P	From	Up To	Original Number Supplier
1	62102-94200-01X	KİLİT	LOCK	SCHLOSS	7		1		BBAG_KILIT_01
2	62102-60890-70X	KİLİT	LOCK	SCHLOSS	7		1		BBAG_KILIT_01
3	62102-70047-72X	KİLİT	LOCK	SCHLOSS	1		1		BBAG_KILIT_01
4	62102-70047-71X	KİLİT	LOCK	SCHLOSS	3		1		BBAG_KILIT_01
5	62102-70027-05X	ANAHTAR	KEY	SCHLÜSSEL	3		1		BBAG_KILIT_01
6	TY150119X	KİLİT	LOCK	SCHLOSS	1		1		BBAG_KILIT_01
7	62102-60890-02X	KİLİT KAPAĞI	CAP LOCK		AR		1		BBAG_KILIT_01
8	6020578X	TUTAMAK	HANDLE	HALTER	7		150404		BBAG_KILIT_02 HAPPICH STD
9	6020601X	KİLİT	LOCK	SCHLOSS	7		150404		BBAG_KILIT_02 HAPPICH STD
10	6020621X	ANAHTAR	KEY	SCHLÜSSEL	3		150404		BBAG_KILIT_02 HAPPICH STD
11	6020571X	TUTAMAK	HANDLE	HALTER	7		150404		BBAG_KILIT_03 HAPPICH CENTLOCK
12	6020600X	KİLİT	LOCK	SCHLOSS	7		150404		BBAG_KILIT_03 HAPPICH CENTLOCK
13	6020620X	ANAHTAR	KEY	SCHLÜSSEL	2		150404		BBAG_KILIT_03 HAPPICH CENTLOCK
20	62102-98020-71Y	KİLİT SETİ	LOCK SET secret code random	SCHLOSS SET	SET		1		BBAG_KILIT_01 secret code random
21	62102-98020-72Y	KİLİT SETİ - HAPPICH STANDARD	LOCK SET - HAPPICH STANDARD	SCHLOSS SET	SET		150404		BBAG_KILIT_02 HAPPICH STD
22	62102-91030-71Y	KİLİT SETİ - HAPPICH MERKEZİ KİLİT	LOCK SET - HAPPICH CENTRAL LOCKING	SCHLOSS SET	SET		150404		BBAG_KILIT_03 HAPPICH CENTLOCK

TEMSA	Kapı motoru hava hattı Door engine air line Tür Motor Lüftungsrohre	Group No : 28-100 Draw. Num. : x Rev. Date : Page : 1
	Vehicle Model: TB162W, TB162Z, TB162X, TB162Y, TB163W, TB163Z, TB163X, TB163Y	

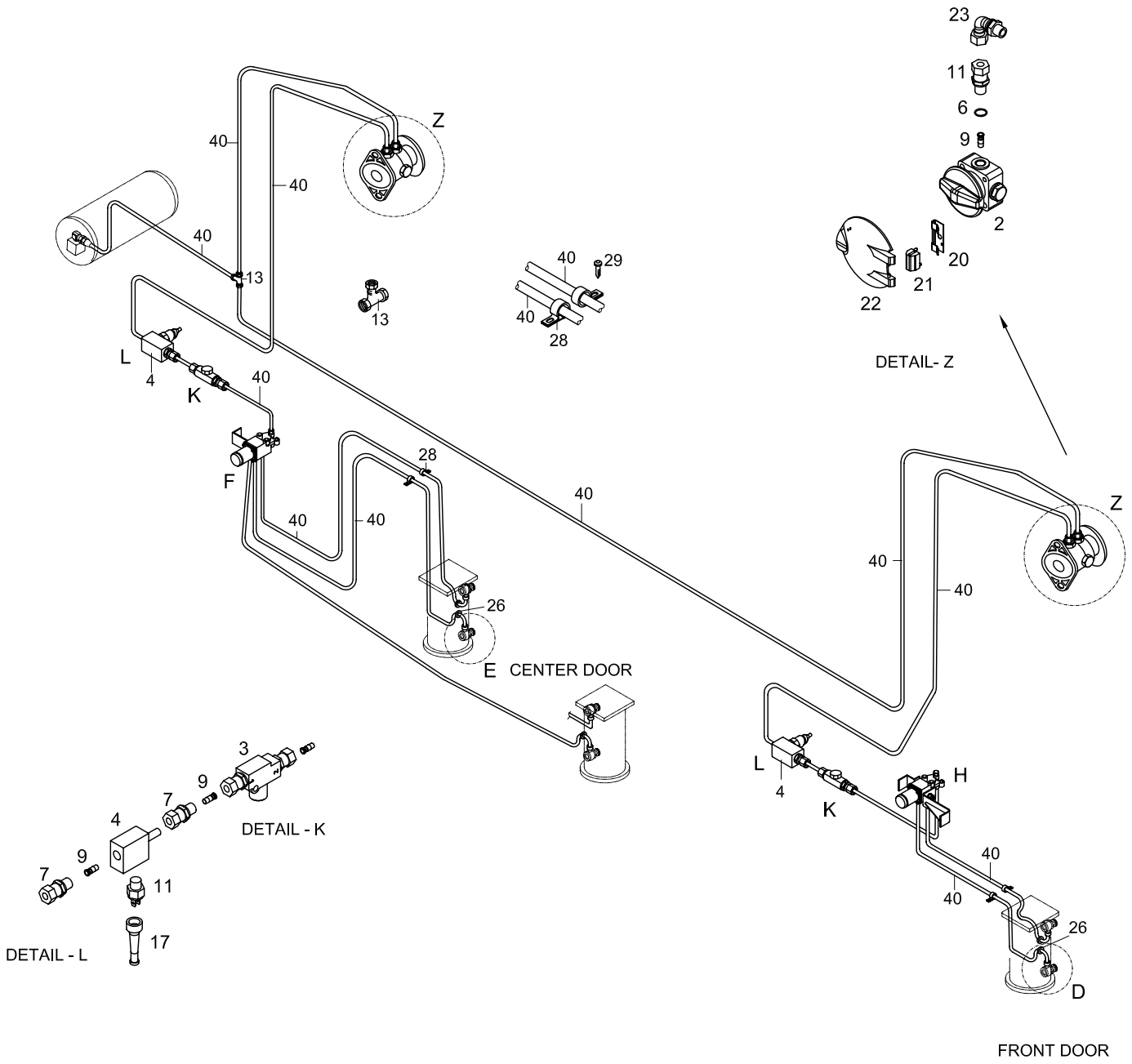

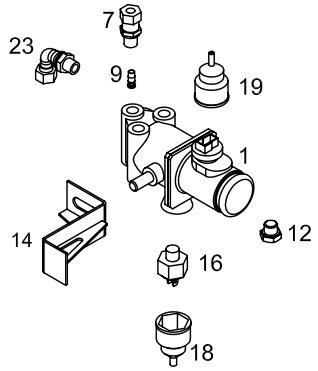

DETAIL- H

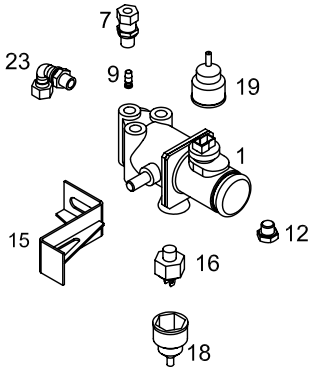

DETAIL - F

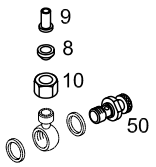

DETAIL - D

TEMSA	Kapı motoru hava hattı Door engine air line Tür Motor Lüftungsrohre	Drw.no: 61201-97050-70Y Vehicle Model: **TB162W, TB162Z, TB162X, TB162Y** **TB163W, TB163Z, TB163X, TB163Y**	**28-0100** RevDate: Page: 1

Pos	Part Number	Turkish	English	German	Qty	R/P	From	Up To	Original Number Supplier
1	TM153213	VALF	VALVE	VENTIL	2		1		0 481 500 101 BOSCH
2	61201-94050-24Y	HAVA MUSLUĞU	DRAIN VALVE	LUFTHAHN	2		1	010305	
2	61201-94050-26Y	HAVA MUSLUĞU	DRAIN VALVE	LUFTHAHN	2		010305		
3	TM153203	VALF	VALVE	VENTIL	2		1		0 481 015 002 BOSCH
4	TM153308	ADAPTÖR	ADAPTER	ADAPTER	3		1		
6	TC298806-53	SIZDIRMAZLIK ELEMANI	THRUST RING	VERDICHTUNGSELEMENT	25		1		478.0012.5 WIRA
7	TM153109	KONNEKTÖR	CONNECTOR	STECKVERBINDER	18		1		101.0812.2 WIRA
8	TM153227	DIŞ YÜZÜK	OUTER RING	AUSSEN RING	6		1		462.0322.2 WIRA
9	TM152109	İÇ YÜZÜK	INNER RING	INNEN RING	25		1		682.0810.5 WIRA
10	TM153228Y	SOMUN	NUT	MUTTER	6		1		
11	TM153199	BASINÇ MÜŞİRİ	GOVERNOR PRESSURE SWITCH	DRUCKFÜHLER	2		1		6ZL 003 259-131 HELLA
12	TM153107	KÖR TAPA	PLUG	BLIND STÖPSEL	2		1		401.1222.2 WIRA
13	TM153261	T-KONNEKTÖR	CONNECTOR - T	T-STECKVERBINDUNG	1		1		111.0808.2 WIRA
14	61201-94050-14Y	BRAKET	BRACKET	BRACKET	1		1		
15	61201-97060-41Y	BRAKET	BRACKET	BRACKET	1		1		
16	TM153220Y	BASINÇ MÜŞİRİ	GOVERNOR PRESSURE	DRUCKFÜHLER	2		1		
17	61201-96050-22Y	LASTİK KAPAK	RUBBER CAP	GUMMI DECKEL	2		1		
18	61201-96050-23Y	LASTİK KAPAK	RUBBER CAP	GUMMI DECKEL	2		1		
19	TM254115Y	LASTİK KAPAK	RUBBER CAP	GUMMI DECKEL	2		1		
20	63113-94010-29Y	YAY	SPRING		2		1		
21	63113-94010-31Y	BRAKET	BRACKET		2		1		
22	63113-94010-27Y	KAPAK	COVER		2		1		
23	TC298106	L-KONNEKTÖR	CONNECTOR-L		2		1		405.0812.2 WIRA
26	MA275717Y	GROMMET	GROMMET	GROMMET	8		1		black 18
28	MA275754Y	KLİP	CLIP	CLIP	AR		1		8
29	MF453029Y	VİDA	SCREW	SCHRAUBE	AR		1		4.8*9.5
40	TM153030Y	POLYAMİD HORTUM	POLYAMIDE HOSE	POLYAMID SCHLAUCH	AR		1		(Ø8x1) TOB=M
50	TC252650Y	AYAR VİDASI	THROTTLE SCREW	DROSSELSCHWENK	4		1		REVAR

29 BAKIM KAPAKLARI
INSPECTION LIDS
x

29-010	Motor bakım kapağı Engine Inspection Lid x	TB162W TB163W	TB162Z TB163Z	TB162X TB163X	TB162Y TB163Y
29-020	Şanzuman ve vites bakım kapağı Transmission & gearshift inspection lid Wartungsdeckel, Getriebe und Gang	TB162W TB163W	TB162Z TB163Z	TB162X TB163X	TB162Y TB163Y
29-030	Yakıt tankı bakım kapağı Fuel tank inspection lid x	TB162W TB163W	TB162Z TB163Z	TB162X TB163X	TB162Y TB163Y
29-040	Hava filtresi bakım kapağı Air filter inspection lid x	TB162W TB163W	TB162Z TB163Z	TB162X TB163X	TB162Y TB163Y
29-060	Hava tankı bakım kapağı Air tank inspection lid x	TB162W TB163W	TB162Z TB163Z	TB162X TB163X	TB162Y TB163Y

TEMSA	Motor bakım kapağı Engine inspection lid Motor Wartungsdeckel	Group No : 29-010 Draw. Num. : x Rev. Date : Page : 1
	Vehicle Model: TB162W, TB162Z, TB162X, TB162Y, TB163W, TB163Z, TB163X, TB163Y	

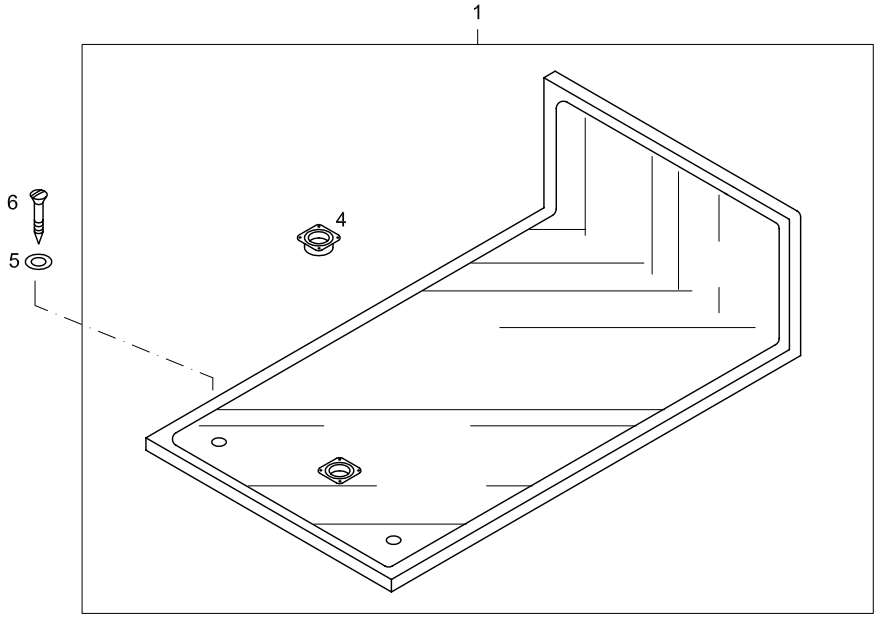

TEMSA	Motor bakım kapağı Engine inspection lid Motor Wartungsdeckel	Drw.no: 62202-90600-71 Vehicle Model: **TB162W, TB162Z, TB162X, TB162Y** **TB163W, TB163Z, TB163X, TB163Y**	**29-010** RevDate: Page: 1

Pos	Part Number	Turkish	English	German	Qty	R/P	From	Up To	Original Number Supplier
1	62202-90600-65Y	MOTOR BAKIM KAPAĞI KOMPLE	ENGINE INSPECTION LID ASSY		1		110404		
4	TC234900X	TUTAMAK	HANDLE		1				
5	MC258530Y	ÖZEL PUL	WASHER PRIVATE		AR		1		
6	MC395445Y	VİDA	SCREW MACHINE		AR		1		M8*55

TEMSA	Şanzuman ve vites bakım kapağı Transmission & gearshift inspection lid Wartungsdeckel, Getriebe und Gang	Group No : 29-020 Draw. Num. : x Rev. Date : Page : 1
	Vehicle Model: TB162W, TB162Z, TB162X, TB162Y, TB163W, TB163Z, TB163X, TB163Y	

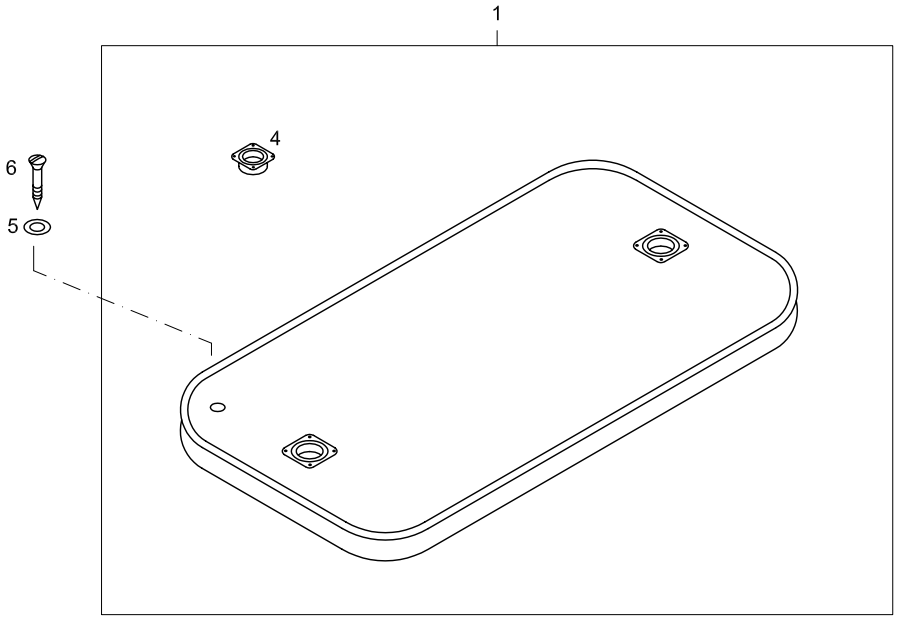

TEMSA	Şanzuman ve vites bakım kapağı Transmission & gearshift inspection lid Wartungsdeckel, Getriebe und Gang	Drw.no.62202-94600-70 Vehicle Model: **TB162W, TB162Z, TB162X, TB162Y** **TB163W, TB163Z, TB163X, TB163Y**	**29-020** RevDate: Page: 1

Pos	Part Number	Turkish	English	German	Qty	R/P	From	Up To	Original Number Supplier
1	62202-90481-65Y	ŞANZUMAN BAKIM KAPAĞI KOMPLE	TRANSMISSION INSPECTION LID ASSY		1		110404		
4	TC234900X	TUTAMAK	WASHER PRIVATE		1		1		
5	MC258530Y	ÖZEL PUL	SCREW MACHINE		AR		1		
6	MC395445Y	VİDA	SCREW		AR		1		M8*55

TEMSA	Yakıt tankı bakım kapağı Fuel tank inspection lid Kraftstofftank Wartungsdeckel	Group No : 29-030 Draw. Num. : x Rev. Date :
	Vehicle Model: TB162W, TB162Z, TB162X, TB162Y, TB163W, TB163Z, TB163X, TB163Y	Page : 1

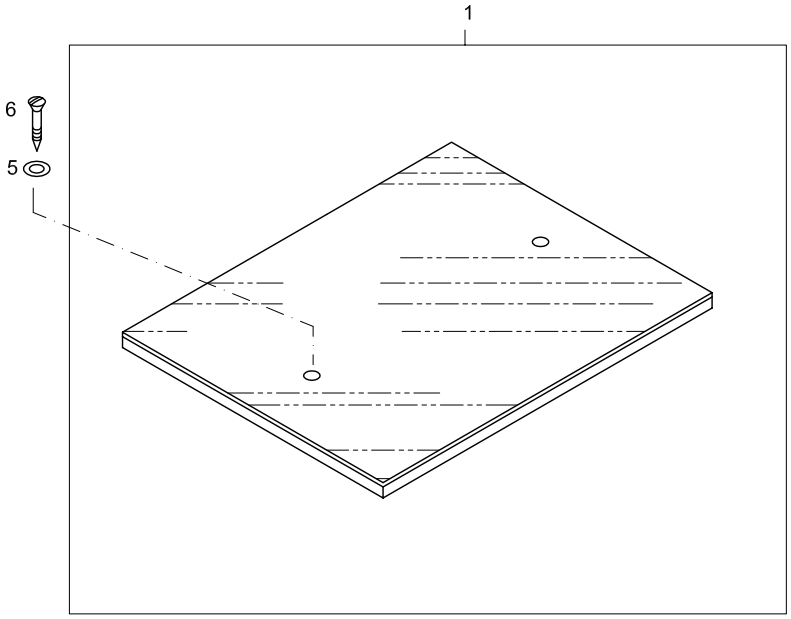

TEMSA	Yakıt tankı bakım kapağı Fuel tank inspection lid Kraftstofftank Wartungsdeckel	Drw.no: Vehicle Model: TB162W, TB162Z, TB162X, TB162Y TB163W, TB163Z, TB163X, TB163Y	29-030 RevDate: Page: 1

Pos	Part Number	Turkish	English	German	Qty	R/P	From	Up To	Original Number Supplier
1	61723-94000-65Y	YAKIT TANKI BAKIM KAPAĞI KOMPLE	FUEL TANK INSPECTION LID ASSY		1		110404		
5	MC258530Y	ÖZEL PUL	WASHER PRIVATE		AR		1		
6	MC395445Y	VİDA	SCREW MACHINE		AR		1		M8*55

TEMSA	Hava filtresi bakım kapağı Air filter, inspection lid	Group No : 29-040 Draw. Num. : x Rev. Date : Page : 1
	Vehicle Model: TB162W, TB162Z, TB162X, TB162Y, TB163W, TB163Z, TB163X, TB163Y	

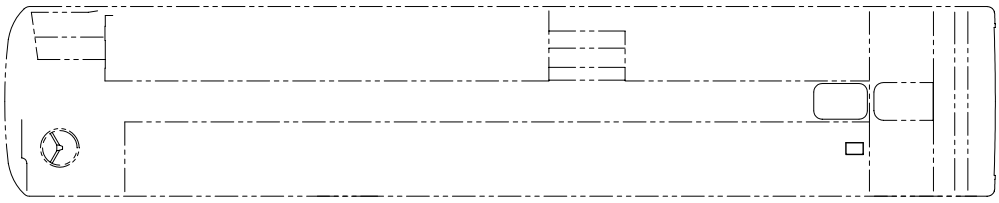

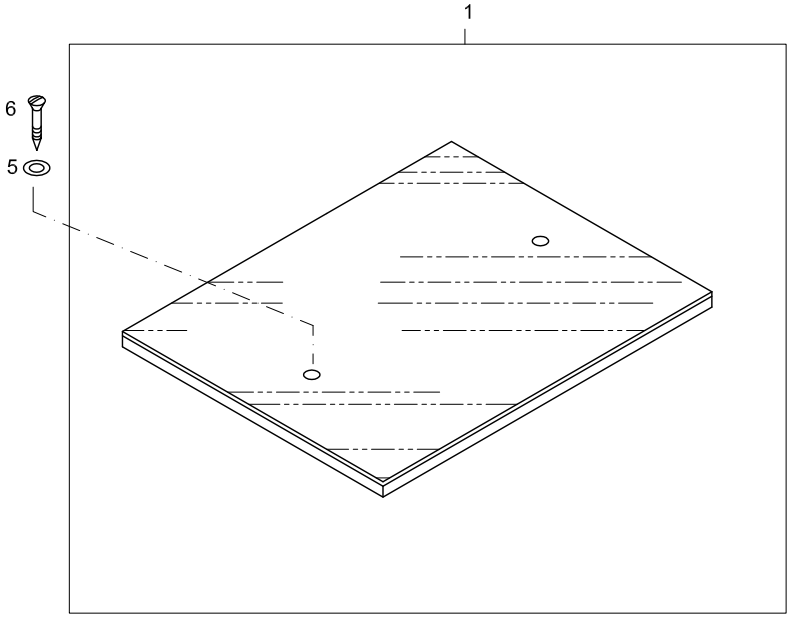

TEMSA	Hava filtresi bakım kapağı Air filter inspection lid	Drw.no: Vehicle Model: **TB162W, TB162Z, TB162X, TB162Y** **TB163W, TB163Z, TB163X, TB163Y**	**29-040** RevDate: Page: 1

Pos	Part Number	Turkish	English	German	Qty	R/P	From	Up To	Original Number Supplier
1	61723-96200-65Y	HAVA FİLTRESİ BAKIM KAPAĞI KOMPLE	AIR FILTER INSPECTION LID ASSY		1		110404		
5	MC258530Y	ÖZEL PUL	WASHER PRIVATE		AR		1		
6	MC395445Y	VİDA	SCREW MACHINE		AR		1		M8*55

TEMSA	Hava tankı bakım kapağı Air tank inspection lid	Group No : 29-060 Draw. Num. : x Rev. Date : Page : 1
	Vehicle Model: TB162W, TB162Z, TB162X, TB162Y, TB163W, TB163Z, TB163X, TB163Y	

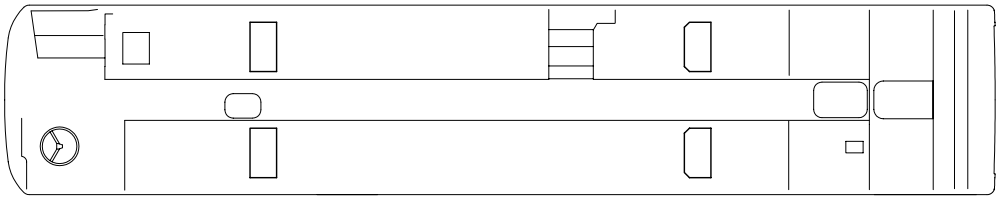

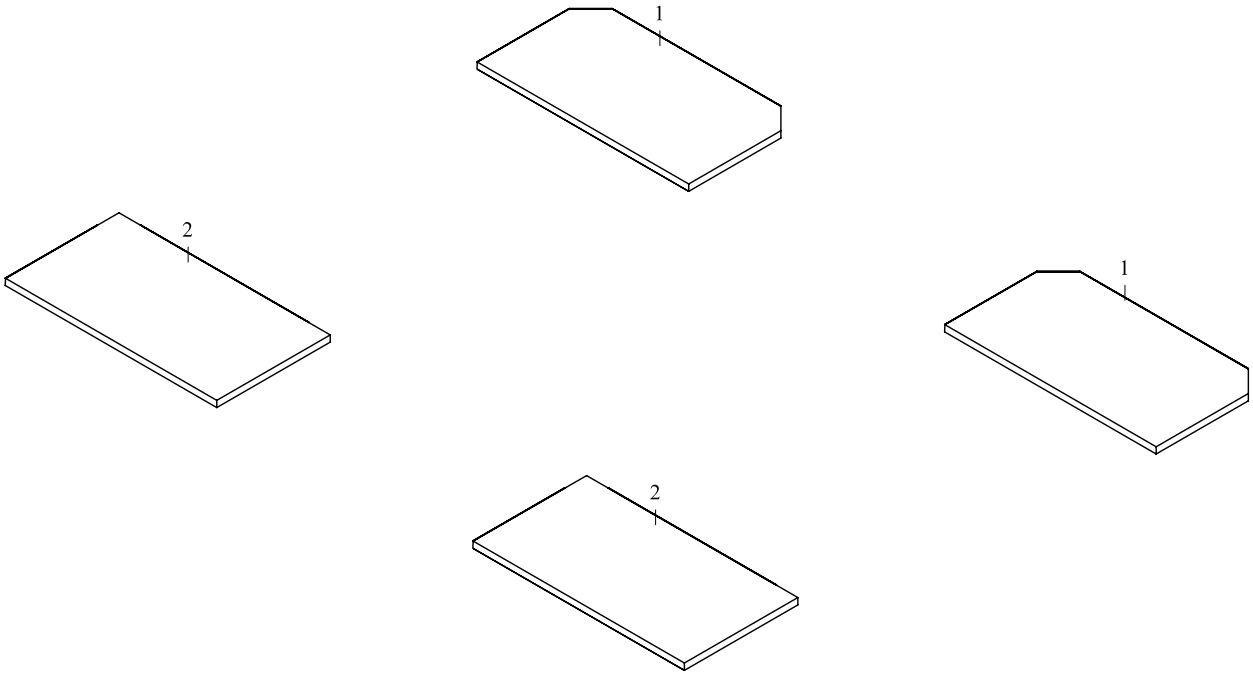

TEMSA	Hava tankı bakım kapağı Air tank inspection lid	Drw.no: Vehicle Model: **TB162W, TB162Z, TB162X, TB162Y** **TB163W, TB163Z, TB163X, TB163Y**	**29-060** RevDate: Page: 1

Pos	Part Number	Turkish	English	German	Qty	R/P	From	Up To	Original Number Supplier
1	61723-91100-65Y	BAKIM KAPAĞI KOMPLE	INSPECTION LID ASSY		2		110404		
2	61723-96100-65Y	BAKIM KAPAĞI KOMPLE	INSPECTION LID ASSY		2		110404		

30 İÇ
INTERIOR
x

30-010	Ön trim Front Trimming x	TB162W TB163W	TB162Z TB163Z	TB162X TB163X	TB162Y TB163Y
30-020	Tavan trim panelleri Roof Trimming Panel x	TB162W TB163W		TB162X TB163X	
30-025	Tavan trim panelleri Roof Trimming Panel x		TB162Z TB163Z		TB162Y TB163Y
30-030	İç yan trim Inside Trimming x	TB162W TB163W			
30-031	İç yan trim Inside Trimming x			TB162X TB163X	
30-035	İç yan trim Inside Trimming x		TB162Z TB163Z		
30-036	İç yan trim Inside Trimming x				TB162Y TB163Y
30-040	Yolcu rafları Luggage racks x	TB162W TB163W		TB162X TB163X	
30-040	Yolcu rafları Luggage racks x		TB162Z TB163Z		TB162Y TB163Y
30-050	Raf kapakları Rack lids x	TB162W TB163W	TB162Z TB163Z	TB162X TB163X	TB162Y TB163Y
30-051	Raf kapakları Rack lids x		TB162Z TB163Z		
30-052	Raf kapakları Rack lids x	TB162W TB163W			
30-060	Bölmeler ve tırabzan Partitions and parapet x	TB162W TB163W	TB162Z TB163Z		
30-061	Bölmeler ve tırabzan - İsrail Partitions and parapet - Israel x	TB162W			
30-062	Bölmeler ve tırabzan Partitions and parapet x				TB162Y TB163Y
30-063	Bölmeler ve tırabzan Partitions and parapet x				TB162Y TB163Y
30-064	Bölmeler Partitions x		TB162Z TB163Z		

30-065	Bölme - İsrail Partition - Israel x	TB162W			
30-070	Güneşlik, iç ayna, saat+termometre Sun visor, inside mirror, clock + thermometer x	TB162W TB163W	TB162Z TB163Z	TB162X TB163X	TB162Y TB163Y
30-080	Hava kanalı iç paneli Panel inner, air duct x	TB162W TB163W			
30-081	Hava kanalı iç paneli Panel inner, air duct x			TB162X TB163X	
30-082	Hava kanalı iç paneli Panel inner, air duct x		TB162Z TB163Z		
30-083	Hava kanalı iç paneli Panel inner, air duct x				TB162Y TB163Y
30-090	Perde Curtain x	TB162W TB163W			
30-091	Perde Curtain x		TB162Z TB163Z		
30-092	Perde Curtain x			TB162X TB163X	
30-093	Perde Curtain x				TB162Y TB163Y
30-100	Halı Carpet x	TB162W TB163W	TB162Z TB163Z	TB162X TB163X	TB162Y TB163Y
30-110	Döşeme trimi Flooring trim x	TB162W TB163W	TB162Z TB163Z	TB162X TB163X	TB162Y TB163Y

TEMSA	Ön trim Front trim Verkleidung Vorne	Group No : 30-010 Draw. Num. : x Rev. Date : Page : 1
	Vehicle Model: TB162W, TB162Z, TB162X, TB162Y, TB163W, TB163Z, TB163X, TB163Y	

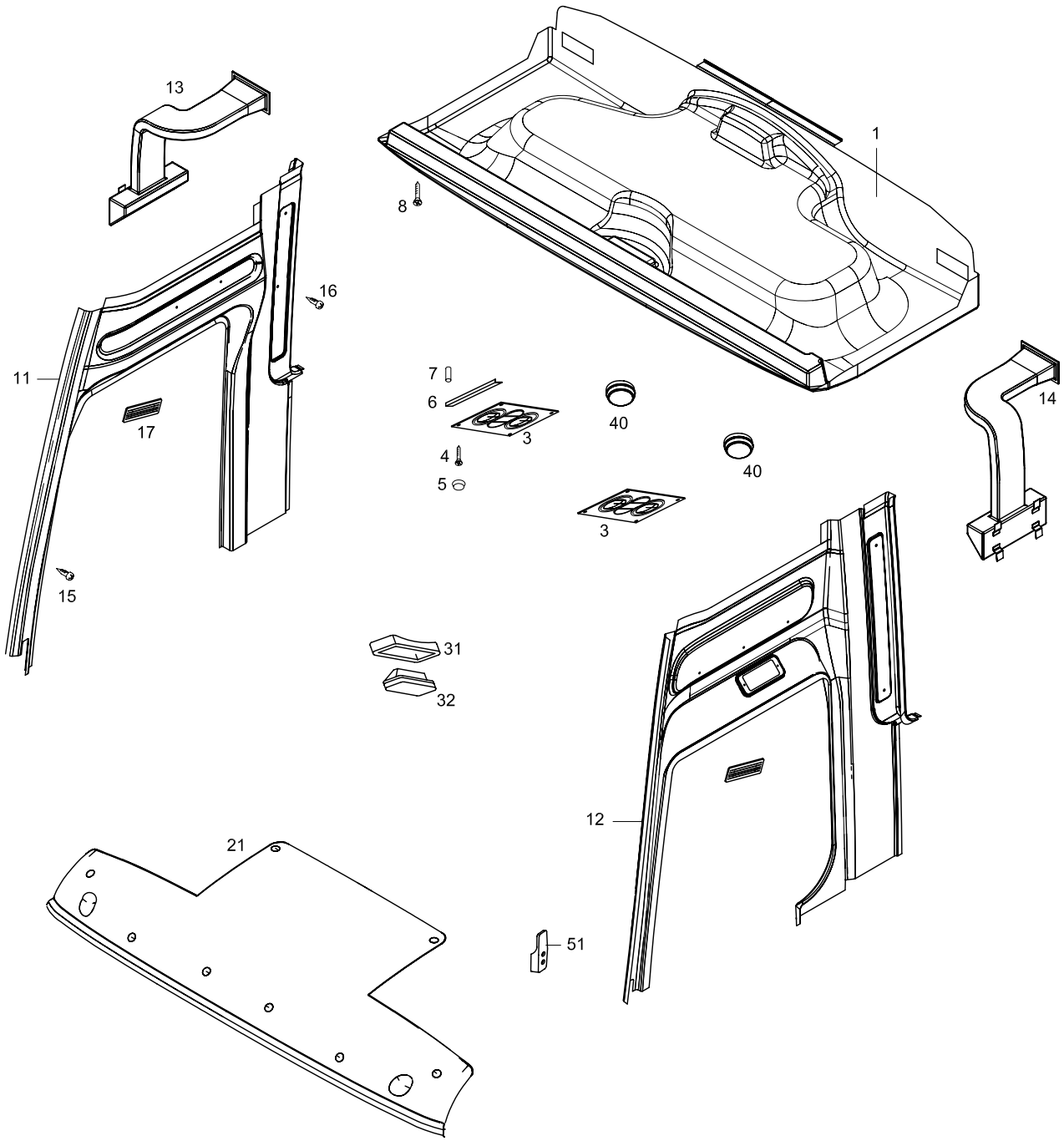

TEMSA	Ön trim Front trim Verkleidung Vorne	Drw.no Vehicle Model: TB162W, TB162Z, TB162X, TB162Y TB163W, TB163Z, TB163X, TB163Y	30-010 RevDate: Page: 1

Pos	Part Number	Turkish	English	German	Qty	R/P	From	Up To	Original Number Supplier
1	3200448Y	ÖN TAVAN TRİMİ	FRONT HEADLINING		1		1		3200448 ELLAMP
3	4997083	LAMBA	LAMP		2		1		4997083 ELLAMP
4	TF457595Y	VİDA	SCREW TAPPING		AR		1		4*16
5	3210015	VİDA BAŞLIĞI	SCREW CAP		AR		1		3210015 ELLAMP
6	TM155107Y	L-PLAKA	PLATE-L		4		1		
7	TC395120Y	PERÇİN	RIVET		AR		1		4*10
8	MF453615Y	VİDA	SCREW TAPPING		AR		1		4.2*16
11	TC238244-02Y	DİREK KAPAĞI- SAĞ	TRIM PILLAR - RH		1		1		
12	TC238245-02Y	DİREK KAPAĞI - SOL	TRIM PILLAR-LH		1		1		
13	TC243302-40AY	KANAL - SAĞ	DUCT - RH		1		1		
14	TC243303-40AY	KANAL - SOL	DUCT - LH		1		1		
15	TC395122Y	PERÇİN	RIVET		AR		1		4*14
16	TU344112Y	PLASTİK PERÇİN	PLASTIC RIVET		AR		1		
17	63113-90379-02A	MENFEZ	AIR DIFFUSER		2		1		P391/66579 PRIMA
21	TC339621CX	ÖN DIŞ SÜSLEME	GARNISH FRONT ROOF		1		1		
31	63111-90300-01Y	STOP LAMBASI ÇERÇEVESİ	STOP LAMP COVER		1		1		
32	63111-90300-02Y	STOP LAMBASI	STOP LAMP		1		1		
40	62202-91014-74Y	SPOT LAMBASI	SPOT LAMP		2		1		
51	TU340192Y	ASKI	HAMMER		1		1		

TEMSA	Tavan trim panelleri Roof panel trimming Dachverkleidung	Group No : 30-020 Draw. Num. : x Rev. Date : Page : 1
	Vehicle Model: TB162W, TB162X, TB163W, TB163X,	

For SAFKAR A/C

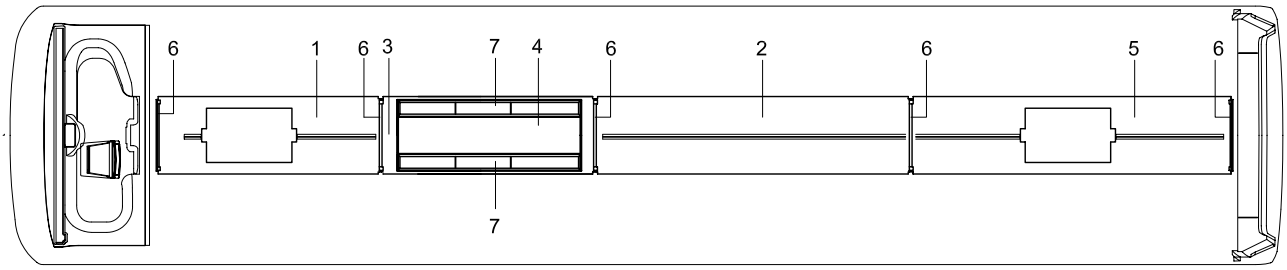

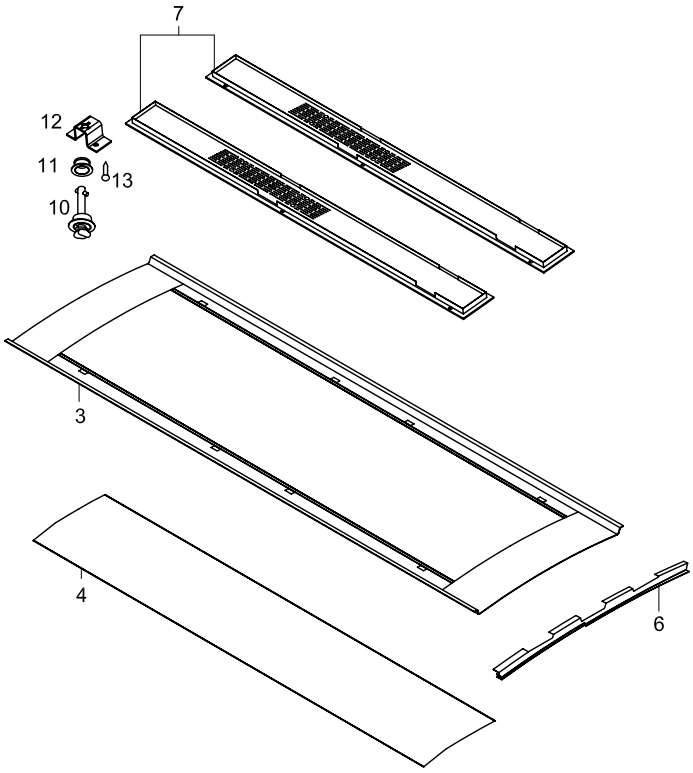

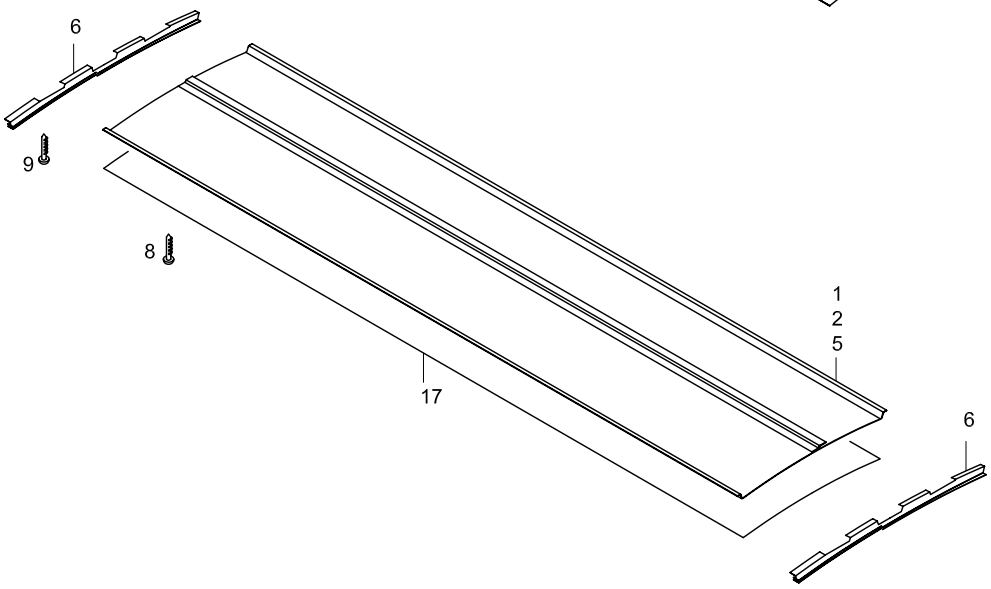

For SÜTRAK A/C

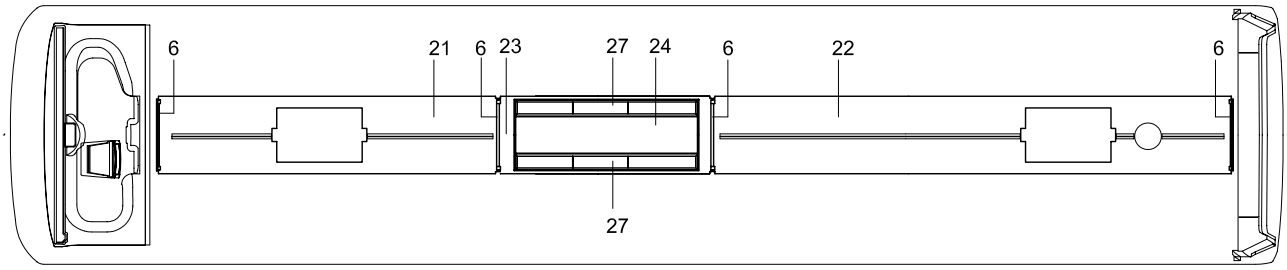

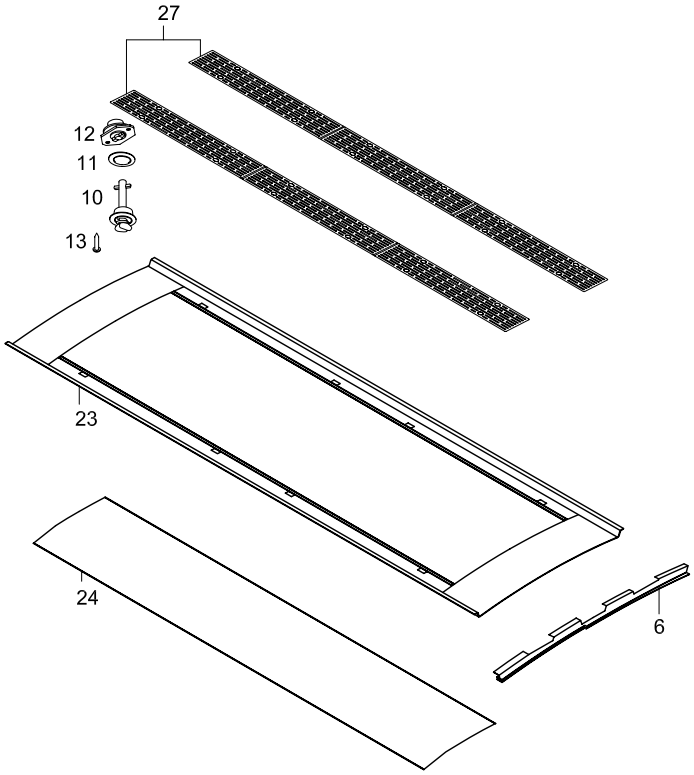

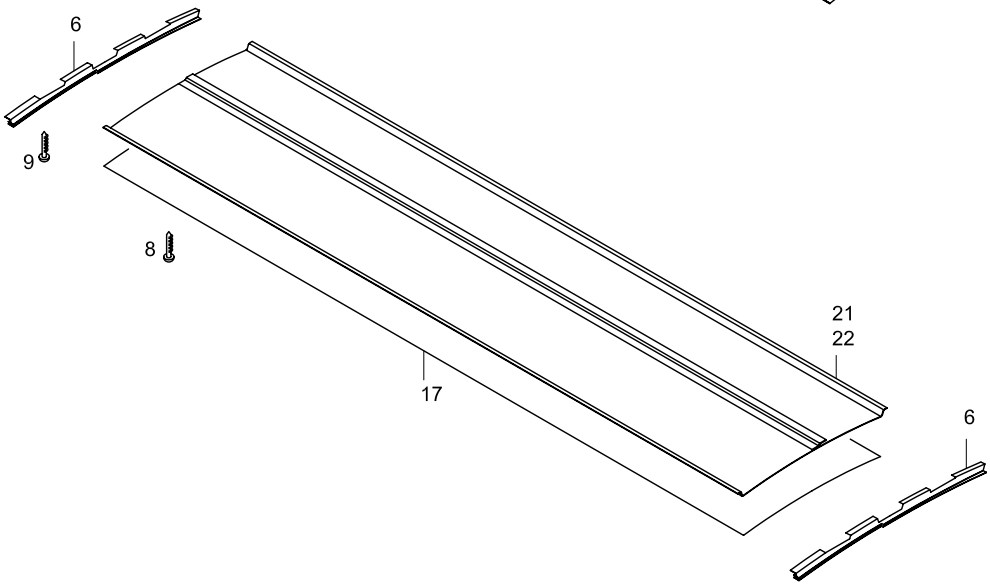

TEMSA	Tavan trim panelleri Roof panel trimming Dachverkleidung	Drw.no: 63111-96017-80/ 63111-96016-80 Vehicle Model: **TB162W, TB162X** **TB163W, TB163X**	**30-020** RevDate: Page: 1

Pos	Part Number	Turkish	English	German	Qty	R/P	From	Up To	Original Number Supplier
1	H77200002-0001	TAVAN TRIM PANELİ	CEILING PANEL		MT		1		ELLAMP L:2106mm for SAFKAR A/C
2	H77200002-0001	TAVAN TRIM PANELİ	CEILING PANEL		MT		1		ELLAMP L:2985mm for SAFKAR A/C
3	63111-97036-01Y	A/C PANEL	A/C FRAME		1		1	311204	
3	A70400381A001	A/C PANEL	A/C FRAME		1		311204		
4	63111-97016-54AY	A/C BAKIM PANELİ	A/C INSPECTION PANEL		1		1	311204	
4	A70400382A001	A/C BAKIM PANELİ	A/C INSPECTION PANEL		1		311204		
5	H77200002-0001	TAVAN TRIM PANELİ	CEILING PANEL		MT		1		ELLAMP L:3032mm for SAFKAR A/C
6	63111-80260-01CY	KENAR ÇITASI	TRIM EDGE		5		1		
7	63111-97016-55Y	MENFEZ	GRILLE		2		1	010703	for SAFKAR A/C
7	63111-97016-57Y	MENFEZ	GRILLE		2		010703		for SAFKAR A/C
8	MF453615Y	VİDA	SCREW TAPPING		AR		1		
9	MF453079Y	VİDA	SCREW TAPPING		AR		1		
10	63111-90016-04Y	ÖZEL VİDA	QUICK TYPE SCREW		12		1	201203	
10	63111-90016-08Y	ÖZEL VİDA	QUICK TYPE SCREW		12		201203		
11	63111-90016-07Y	YÜZÜK	RING		12		1		
12	63111-90016-06Y	KAİDE	BASE		12		1		
13	MC395120	PERÇİN	RIVET		AR		1		
17	3010090	YÜZEY KAPLAMASI	INTERNAL FABRIC		AR		1		
21	H77200002-0001	TAVAN TRIM PANELİ	CEILING PANEL		MT		1		ELLAMP L:3517mm for SÜTRAK A/C
22	H77200002-0001	TAVAN TRIM PANELİ	CEILING PANEL		MT		1		ELLAMP L:4420mm for SÜTRAK A/C
23	3200449	KLİMA TAVAN PANEL	A/C CEILING PANEL		1		1	311204	ELLAMP for SÜTRAK A/C
23	A70400381A001	A/C PANEL	A/C FRAME		1		311204		ELLAMP for SÜTRAK A/C
24	J3200422-0001	KLİMA BAKIM PANELİ	INSPECTON PANEL		1		1	311204	ELLAMP for SÜTRAK A/C
24	A70400382A001	A/C BAKIM PANELİ	A/C INSPECTION PANEL		1		311204		ELLAMP for SÜTRAK A/C
27	TU230100-06Y	MENFEZ	GRILLE		2		1		for SÜTRAK A/C

TEMSA	Tavan trim panelleri Roof panel trimming Dachverkleidung	Group No : 30-025 Draw. Num. : x Rev. Date : Page : 1
	Vehicle Model: TB162Z, TB162Y, TB163Z, TB163Y	

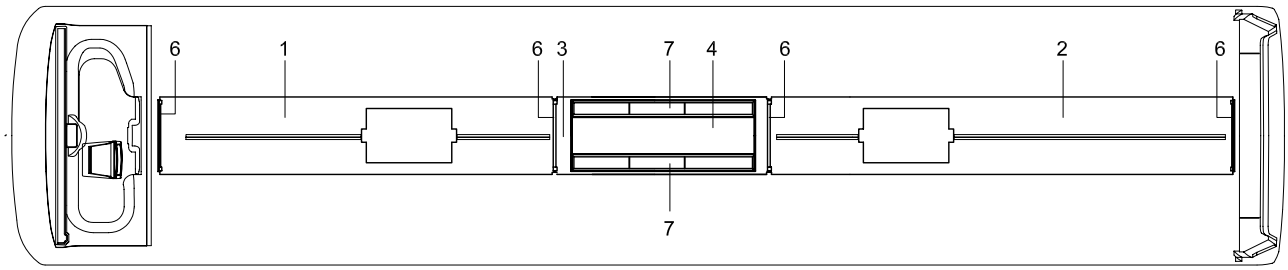

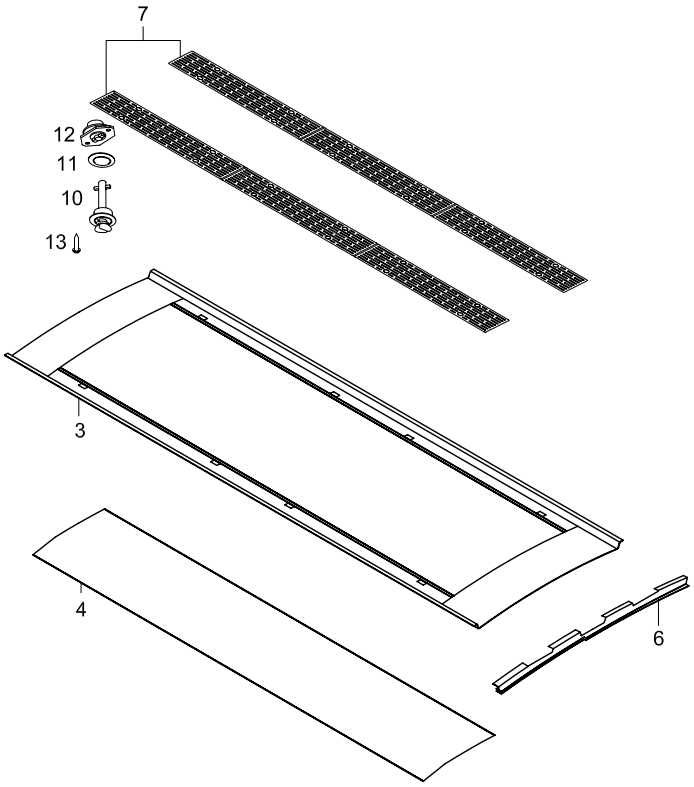

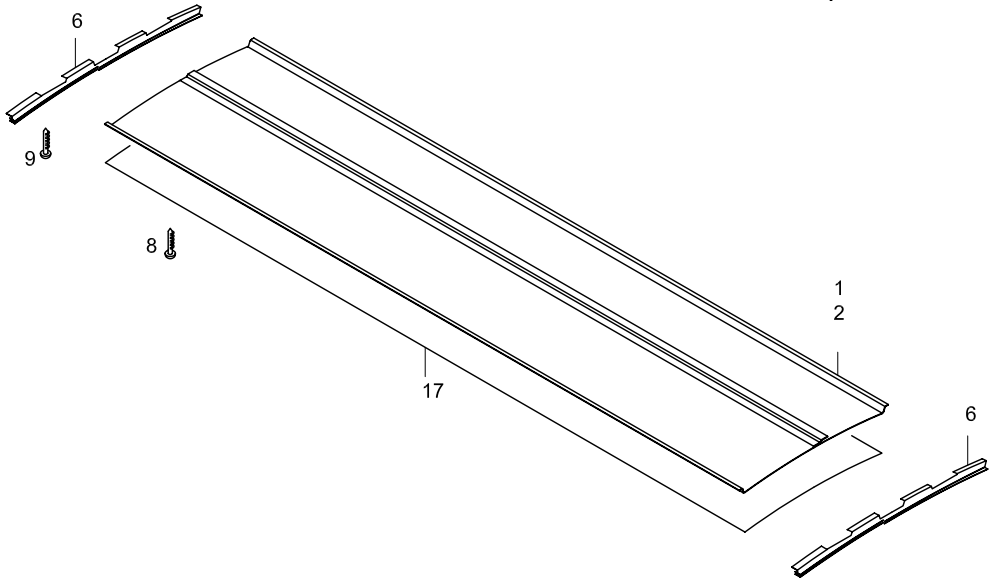

TEMSA	Tavan trim panelleri Roof panel trimming Dachverkleidung	Drw.no: 63111-97016-80 / 63111-97017-80 Vehicle Model: **TB162Z, TB162Y** **TB163Z, TB163Y**	**30-025** RevDate: Page: 1

Pos	Part Number	Turkish	English	German	Qty	R/P	From	Up To	Original Number Supplier
1	H77200002-001	TAVAN TRIM PANELİ	CEILING PANEL		MT		1		ELLAMP
2	H77200002-001	TAVAN TRIM PANELİ	CEILING PANEL		MT		1		ELLAMP
3	63111-97036-01Y	A/C PANEL	A/C FRAME		1		1	311204	
3	A70400381A001	A/C PANEL	A/C FRAME		1		311204		
4	63111-97016-54AY	A/C BAKIM PANELİ	A/C INSPECTION PANEL		1		1	311204	
4	A70400382A001	A/C BAKIM PANELİ	A/C INSPECTION PANEL		1		311204		
6	63111-80260-01CY	KENAR ÇITASI	TRIM EDGE		5		1		
7	63111-97016-55Y	MENFEZ	GRILLE		2		1	010703	for SAFKAR A/C
7	63111-97016-57Y	MENFEZ	GRILLE		2		010703		for SAFKAR A/C
7	TU230100-06Y	MENFEZ	GRILLE		2		1		for SÜTRAK A/C
8	MF453615Y	VİDA	SCREW TAPPING		AR		1		
9	MF453079Y	VİDA	SCREW TAPPING		AR		1		
10	63111-90016-04Y	ÖZEL VİDA	QUICK TYPE SCREW		12		1	201203	
10	63111-90016-08Y	ÖZEL VİDA	QUICK TYPE SCREW		12		201203		
11	63111-90016-07Y	YÜZÜK	RING		12		1		
12	63111-90016-06Y	KAİDE	BASE		12		1		
13	MC395120	PERÇİN	RIVET		AR		1		
17	3010090	YÜZEY KAPLAMASI	INTERNAL FABRIC		AR		1		

SOL İÇ GÖRÜNÜŞ
INSIDE VIEW - LH

option code: BIYC031

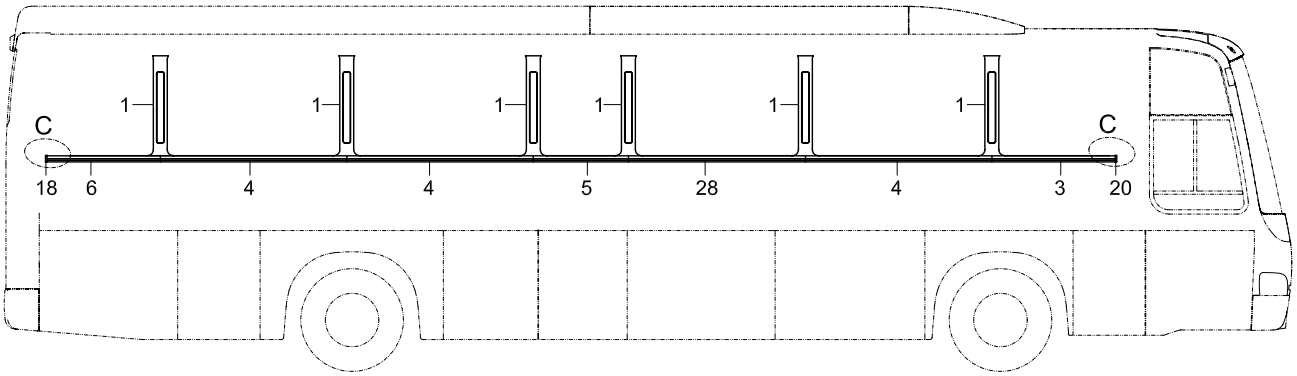

SAĞ İÇ GÖRÜNÜŞ
INSIDE VIEW - RH

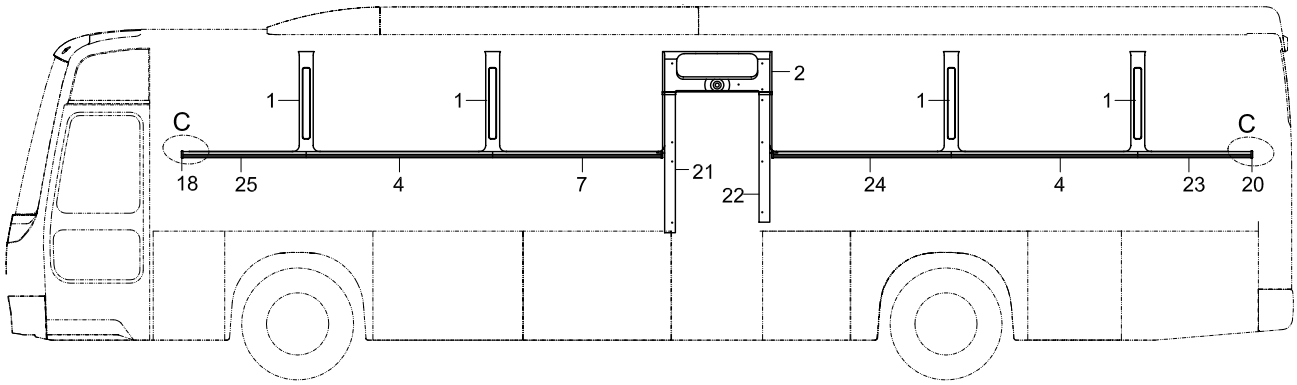

SOL İÇ GÖRÜNÜŞ
INSIDE VIEW - LH

option code: BIYC032

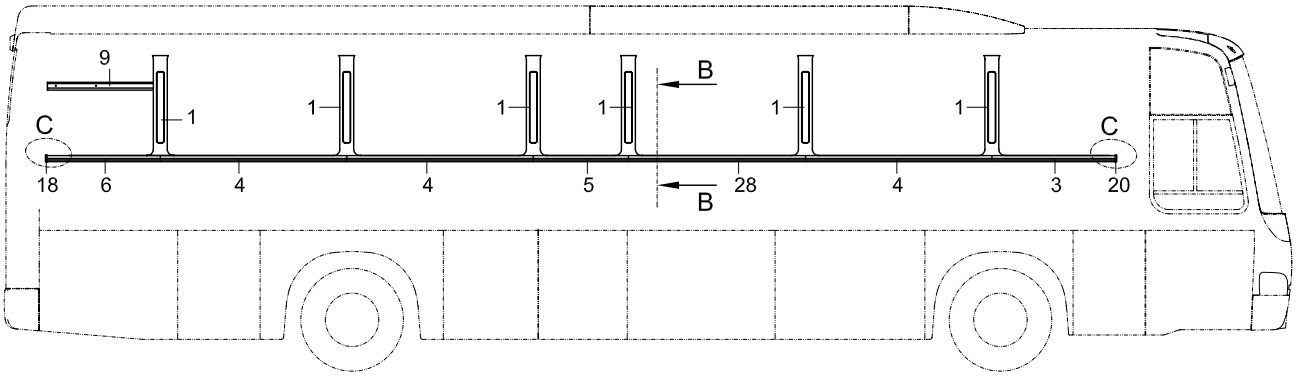

SAĞ İÇ GÖRÜNÜŞ
INSIDE VIEW - RH

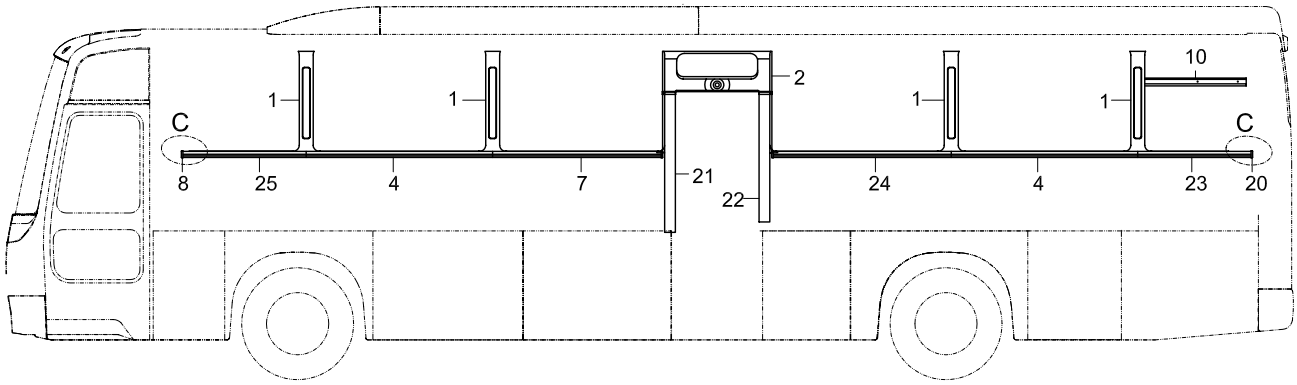

SOL İÇ GÖRÜNÜŞ
INSIDE VIEW - LH

option code: BYCS032

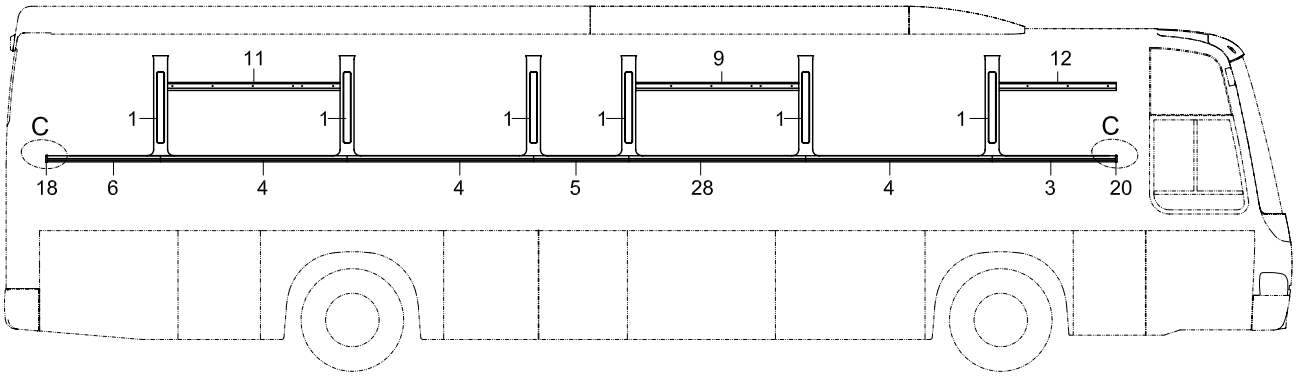

SAĞ İÇ GÖRÜNÜŞ
INSIDE VIEW - RH

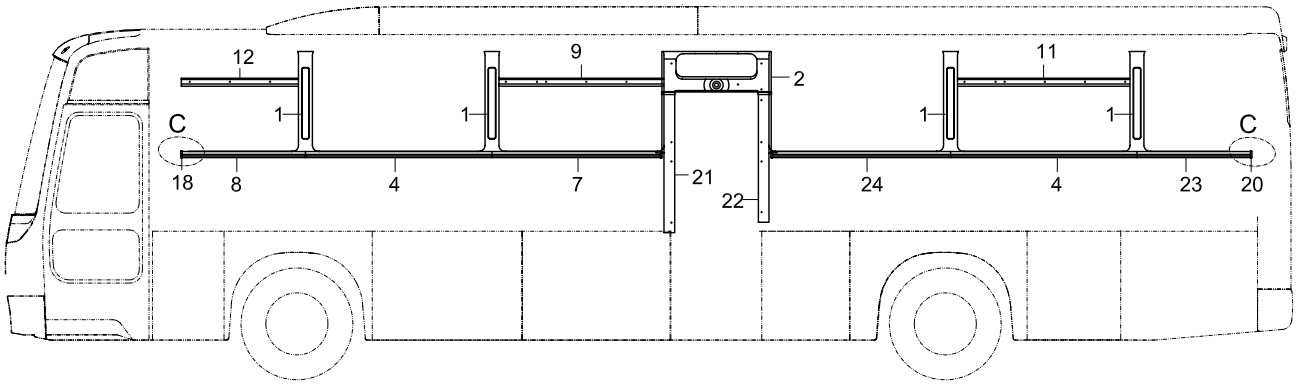

SOL İÇ GÖRÜNÜŞ
INSIDE VIEW - LH

option code: BYCS03ISR - ISRAEL
option code: BYCS031

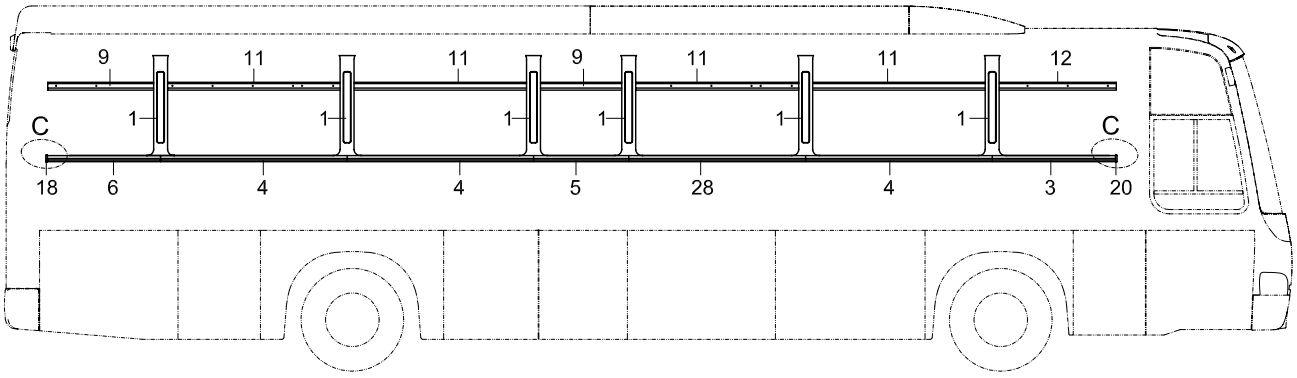

SAĞ İÇ GÖRÜNÜŞ
INSIDE VIEW - RH

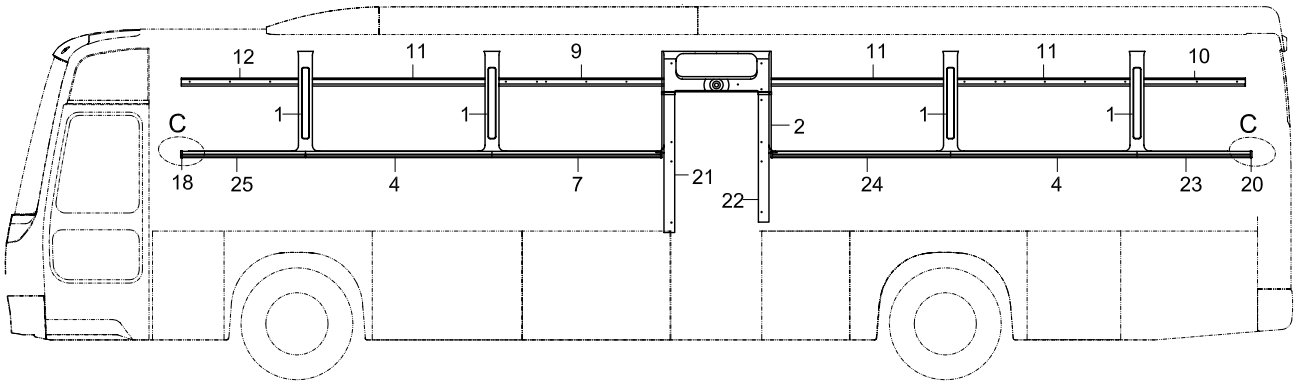

TEMSA	İç yan trim Inside trimming Innenverkleidung	Group No : 30-030 Draw. Num. : x Rev. Date : Page : 2
	Vehicle Model: TB162W, TB163W,	

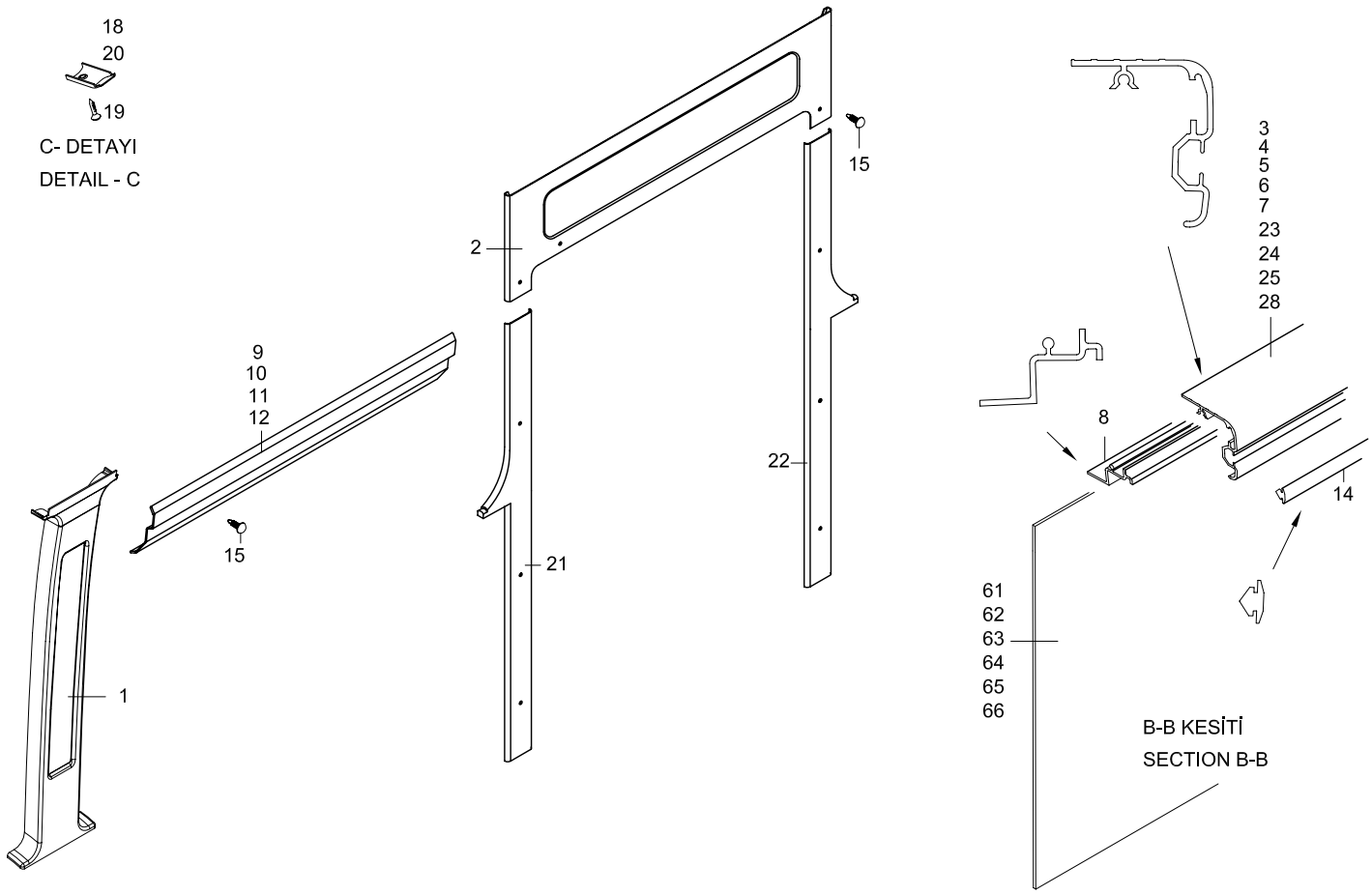

SOL İÇ GÖRÜNÜŞ
INSIDE VIEW - LH

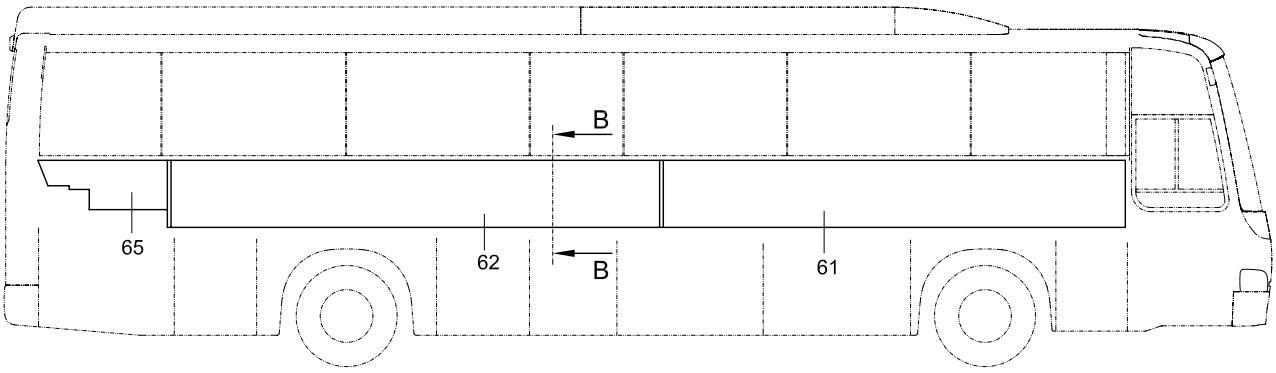

SAĞ İÇ GÖRÜNÜŞ
INSIDE VIEW - RH

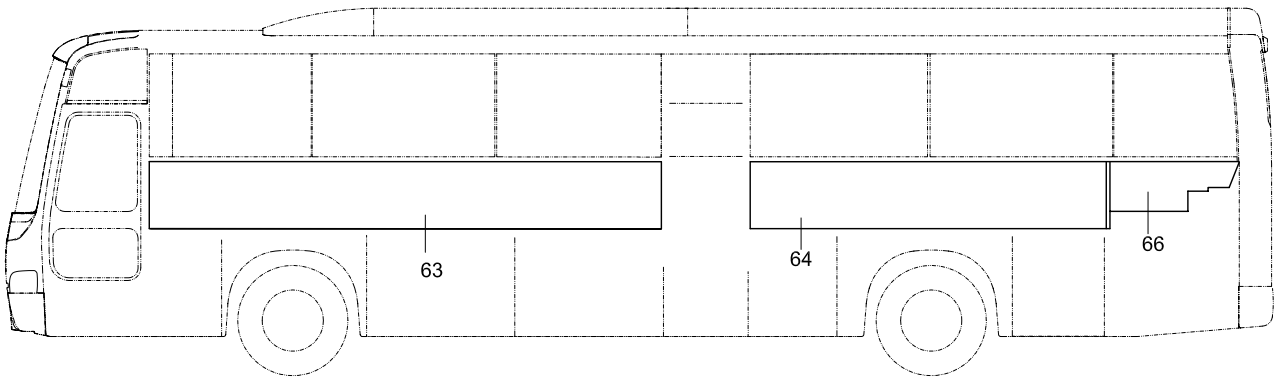

TEMSA	İç yan trim Inside trimming Innenverkleidung	Drw.no: 63117-96000-70/ 63113-96010-70/71/75 Vehicle Model: **TB162W** **TB163W**	**30-030** RevDate: Page: 1

Pos	Part Number	Turkish	English	German	Qty	R/P	From	Up To	Original Number Supplier
1	63113-90150-02Y	DİREK KAPAĞI	COVER PILLAR		10		1		
2	63113-97216-02Y	ORTA KAPI KAPLAMASI - ÜST	COVER CENTER DOOR - UPPER		1		1	???	
2	63113-97216-04Y	ORTA KAPI KAPLAMASI - ÜST	COVER CENTER DOOR - UPPER		1		???		
3	63113-92011-03Y	FİTİL	MOULDING		1		1		L:1160mm
4	TC326693-31Y	FİTİL	MOULDING		5		1		L:1160mm
5	63113-96010-05Y	FİTİL	MOULDING		1		1		L:888mm
6	63113-97010-06Y	FİTİL	MOULDING		1		1		L:1067mm
7	63113-96010-07Y	FİTİL	MOULDING		1		1		L:1605mm
8	63113-80100-00BY	ÇERÇEVE	FRAME		MT		1		
9	63113-97010-51Y	L-PLAKA	PLATE-L		4		1		
10	63113-97010-52Y	L-PLAKA	PLATE-L		4		1		
11	63113-90028-31Y	L-PLAKA	PLATE-L		4		1		
12	63113-90028-34Y	L-PLAKA	PLATE-L		4		1		
14	73108-00050-05Y	FİTİL	MOULDING		AR		1		
15	TU344112Y	PLASTİK PERÇİN	PLASTIC RIVET		AR		1		
18	63122-70128-04Y	FİTİL BAŞLIĞI	MOULDING END		3		1		
19	MF457583Y	VİDA	SCREW		AR		1		
20	63122-70128-03Y	FİTİL BAŞLIĞI	MOULDING END		1		1		
21	63113-97216-01Y	ORTA KAPI KAPLAMASI	COVER CENTER DOOR		1		1		
22	63113-97216-03Y	ORTA KAPI KAPLAMASI	COVER CENTER DOOR		1		1		
23	63113-97010-23Y	FİTİL	MOULDING		1		1		L:1067mm
24	63113-94011-24Y	FİTİL	MOULDING		1		1		L:1722mm
25	63113-92011-25Y	FİTİL	MOULDING		1		1		L:1160mm
28	63113-96010-28Y	FİTİL	MOULDING		1		1		L:1651mm
61	63117-96100-01Y	İÇ PANEL	PANEL INNER		1		1		
62	63117-96100-02Y	İÇ PANEL	PANEL INNER		1		1		
63	63117-96100-03Y	İÇ PANEL	PANEL INNER		1		1		
64	63117-97100-04Y	İÇ PANEL	PANEL INNER		1		1		
65	63117-97100-05Y	İÇ PANEL	PANEL INNER		1		1		
66	63117-97100-06Y	İÇ PANEL	PANEL INNER		1		1		

TEMSA	İç yan trim Inside trimming Innenverkleidung	Group No : 30-031 Draw. Num. : x Rev. Date : Page : 1
	Vehicle Model: TB162X, TB163X,	

SOL İÇ GÖRÜNÜŞ
INSIDE VIEW - LH

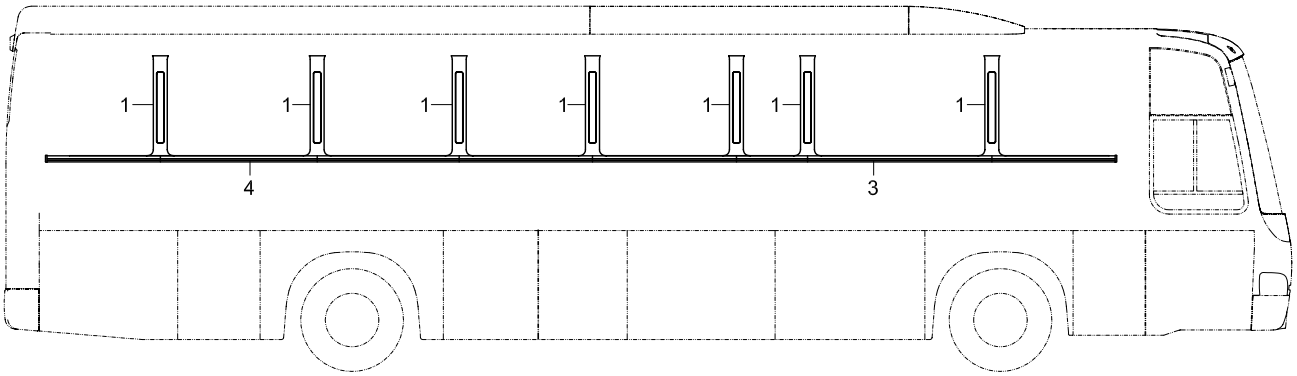

SAĞ İÇ GÖRÜNÜŞ
INSIDE VIEW - RH

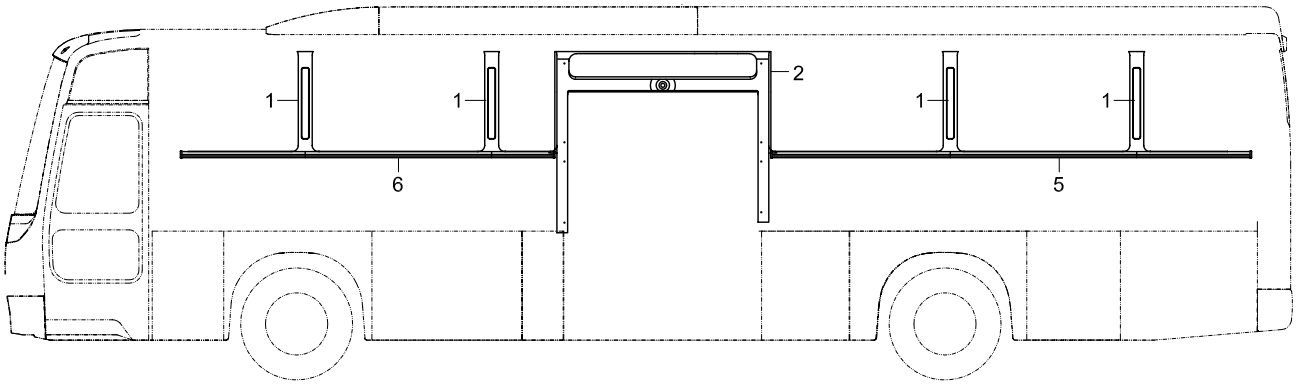

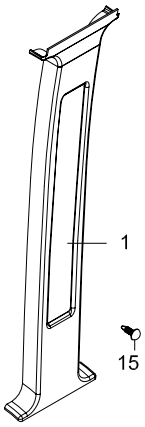

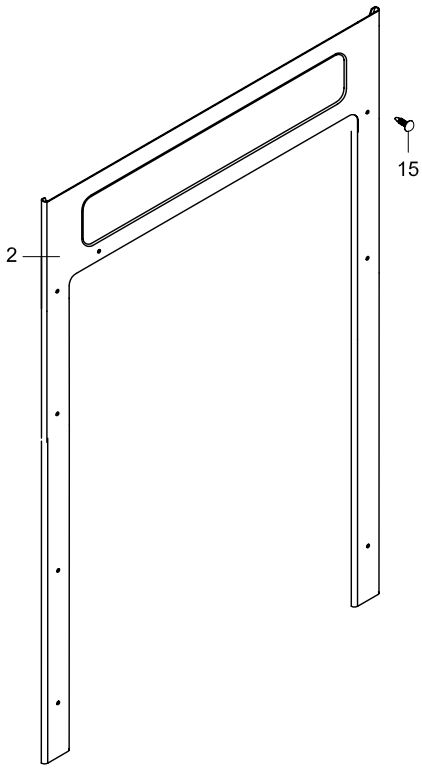

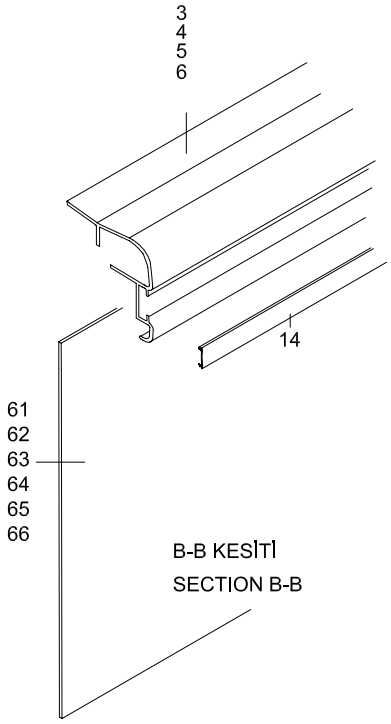

SOL İÇ GÖRÜNÜŞ
INSIDE VIEW - LH

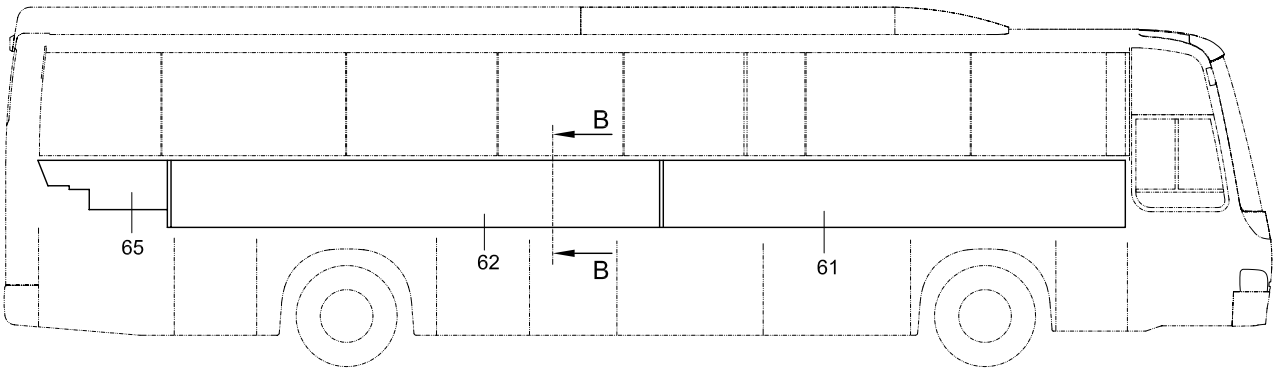

SAĞ İÇ GÖRÜNÜŞ
INSIDE VIEW - RH

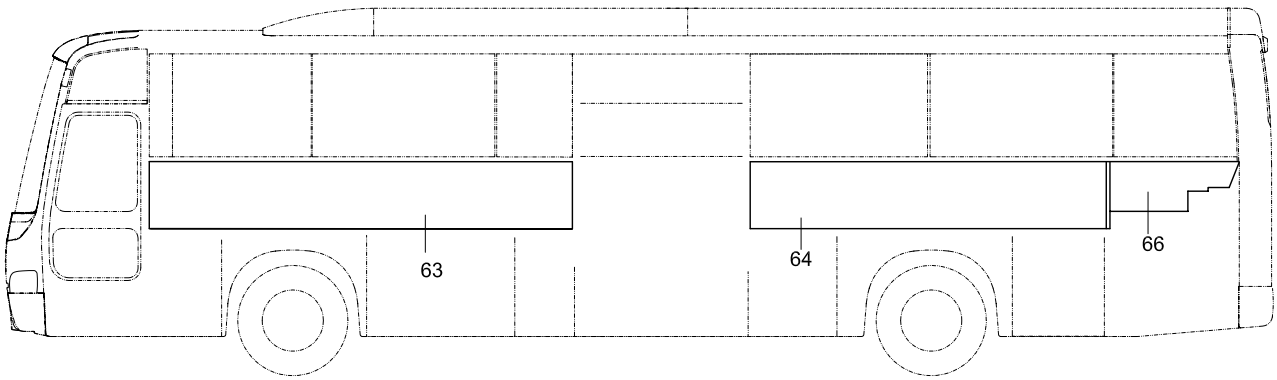

TEMSA	İç yan trim Inside trimming Innenverkleidung	Drw.no : 63117-98000-70 / 63113-98010-70 Vehicle Model: **TB162X** **TB163X**	**30-031** RevDate: Page: 1

Pos	Part Number	Turkish	English	German	Qty	R/P	From	Up To	Original Number Supplier
1	63113-96410-01Y	DİREK KAPAĞI	COVER PILLAR		12		010504		
2	63113-99110-02Y	ORTA KAPI KAPLAMASI - ÜST	COVER CENTER DOOR - UPPER		1		010504		
3	63113-98010-03Y	FİTİL	MOULDING		1		010504		
4	63113-99010-04Y	FİTİL	MOULDING		1		010504		
5	63113-99010-05Y	FİTİL	MOULDING		1		010504		
6	63113-98010-06Y	FİTİL	MOULDING		1		010504		
14	63113-99010-14Y	FİTİL	MOULDING		MT		010504		
15	TU344112Y	PLASTİK PERÇİN	PLASTIC RIVET		AR		1		
61	63117-98100-01Y	İÇ PANEL	PANEL INNER		1		010504		
62	63117-98100-02Y	İÇ PANEL	PANEL INNER		1		010504		
63	63117-98100-03Y	İÇ PANEL	PANEL INNER		1		010504		
64	63117-98100-04Y	İÇ PANEL	PANEL INNER		1		010504		
65	63117-97100-05Y	İÇ PANEL	PANEL INNER		1		1		
66	63117-97100-06Y	İÇ PANEL	PANEL INNER		1		1		

TEMSA	İç yan trim Inside trimming Innenverkleidung	Group No : 30-035 Draw. Num. : x Rev. Date : Page : 1
	Vehicle Model: TB162Z, TB163Z,	

SOL İÇ GÖRÜNÜŞ
INSIDE VIEW - LH

option code: BIYC031

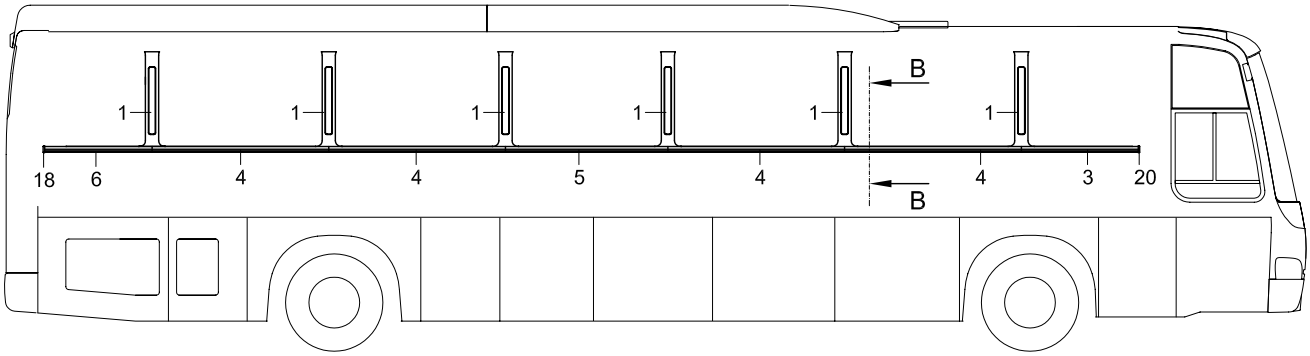

SAĞ İÇ GÖRÜNÜŞ
INSIDE VIEW - RH

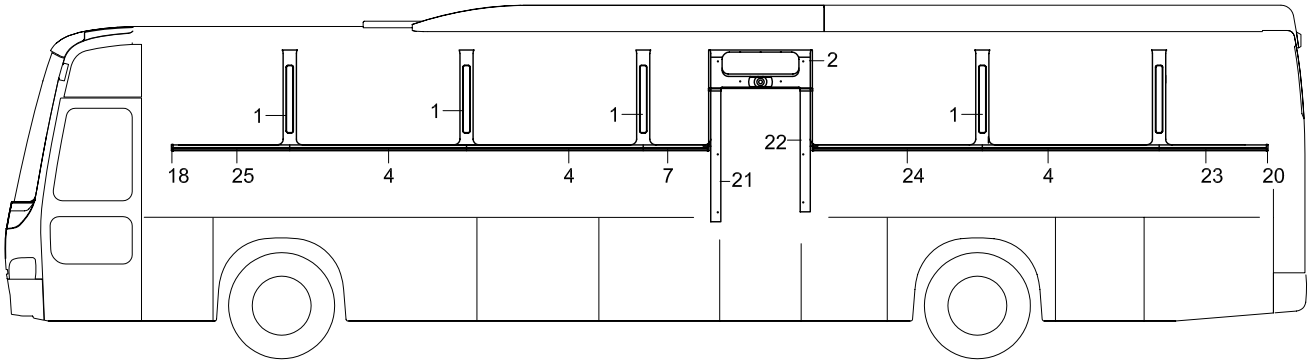

SOL İÇ GÖRÜNÜŞ
INSIDE VIEW - LH

option code: BIYC032

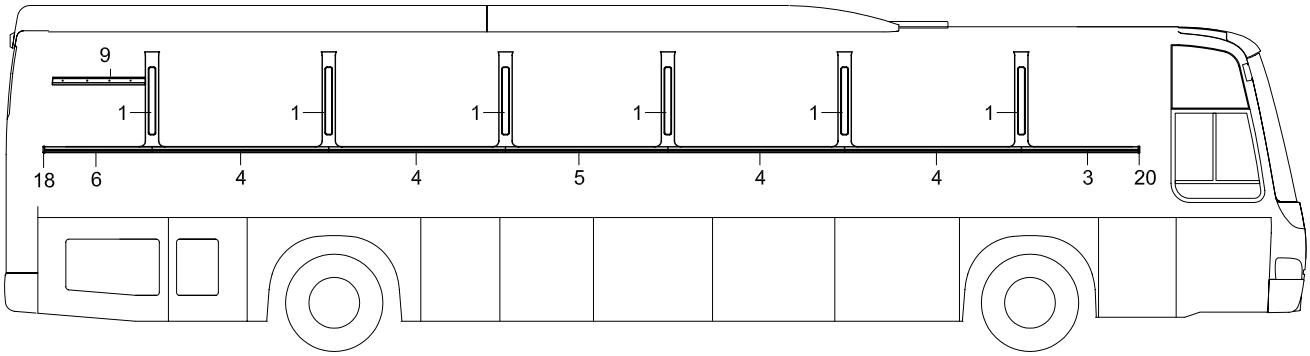

SAĞ İÇ GÖRÜNÜŞ
INSIDE VIEW - RH

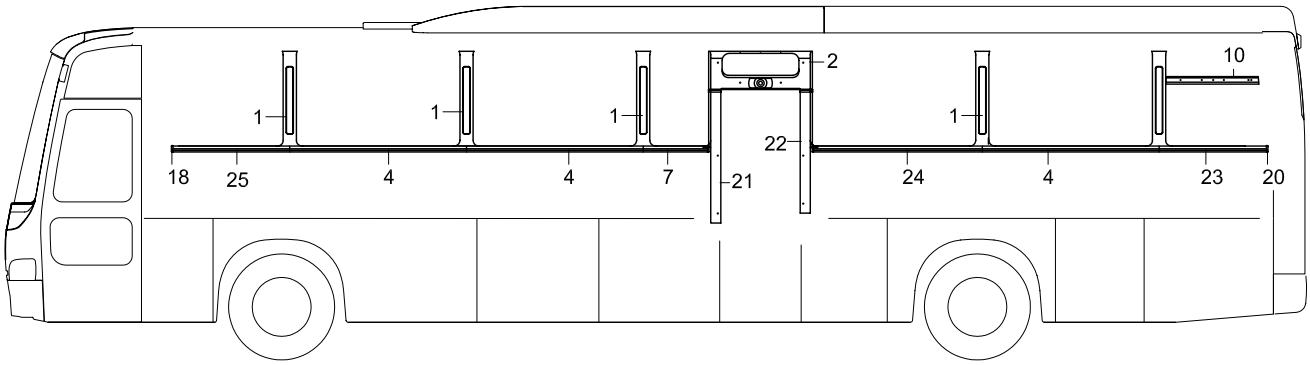

SOL İÇ GÖRÜNÜŞ
INSIDE VIEW - LH

option code: BYCS032

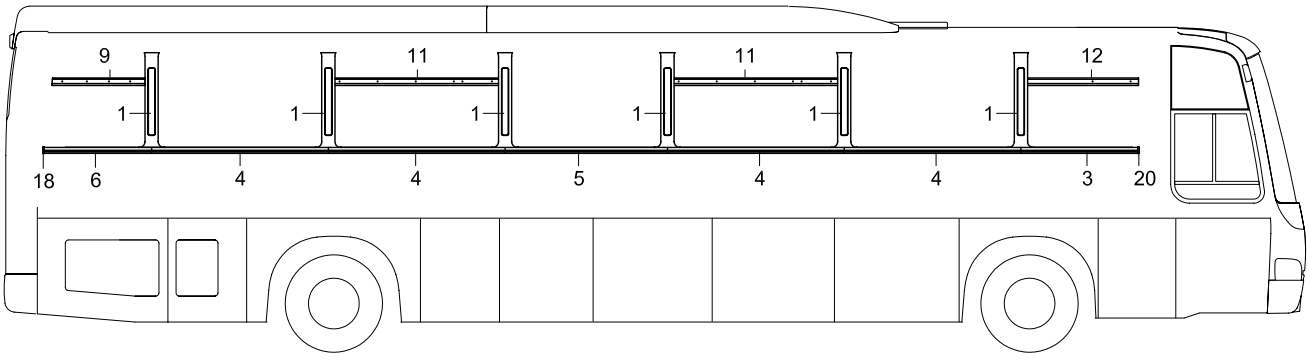

SAĞ İÇ GÖRÜNÜŞ
INSIDE VIEW - RH

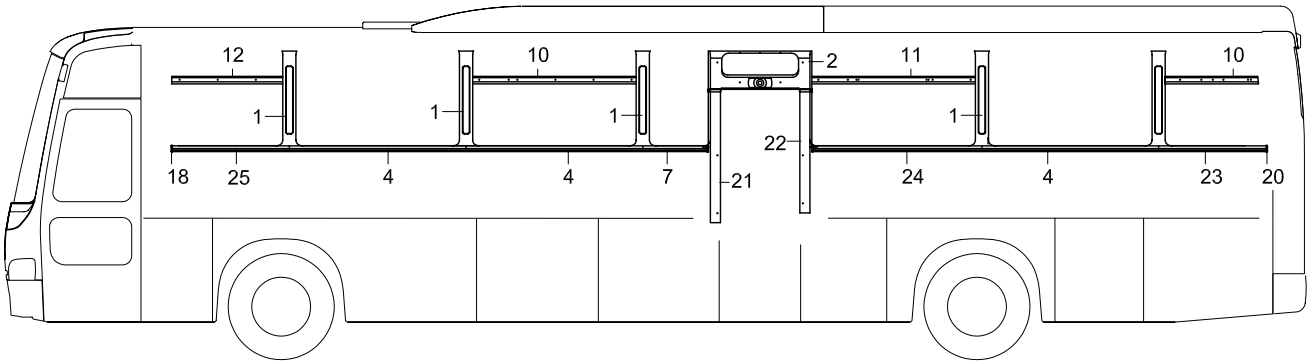

SOL İÇ GÖRÜNÜŞ
INSIDE VIEW - LH

option code: BYCS031

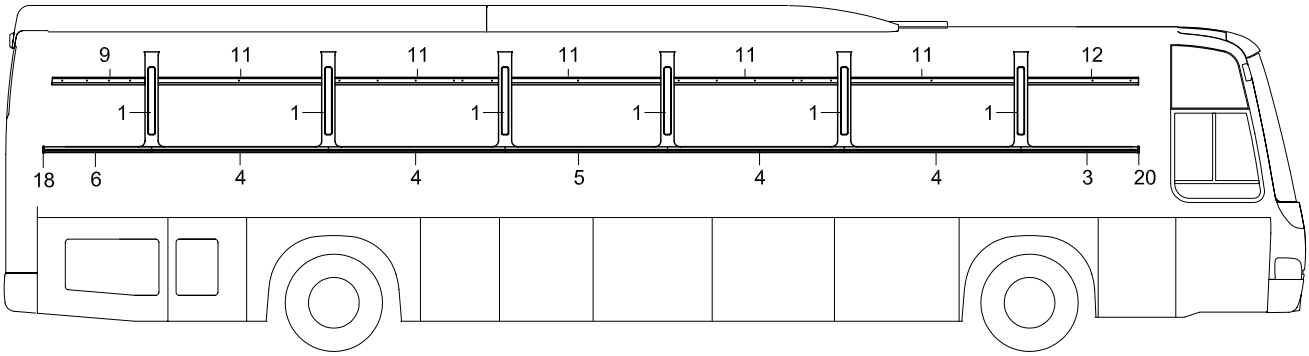

SAĞ İÇ GÖRÜNÜŞ
INSIDE VIEW - RH

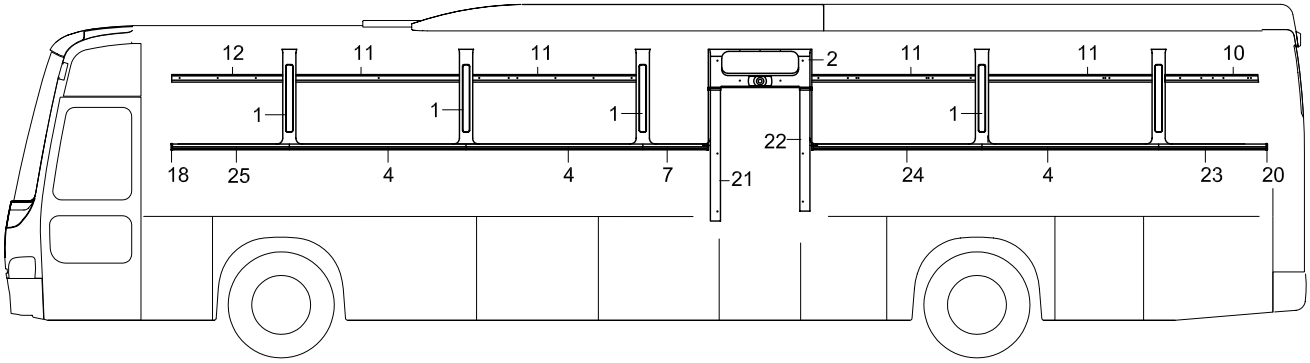

TEMSA	İç yan trim Inside trimming Innenverkleidung	Group No : 30-035 Draw. Num. : x Rev. Date : Page : 3
	Vehicle Model: TB162Z, TB163Z,	

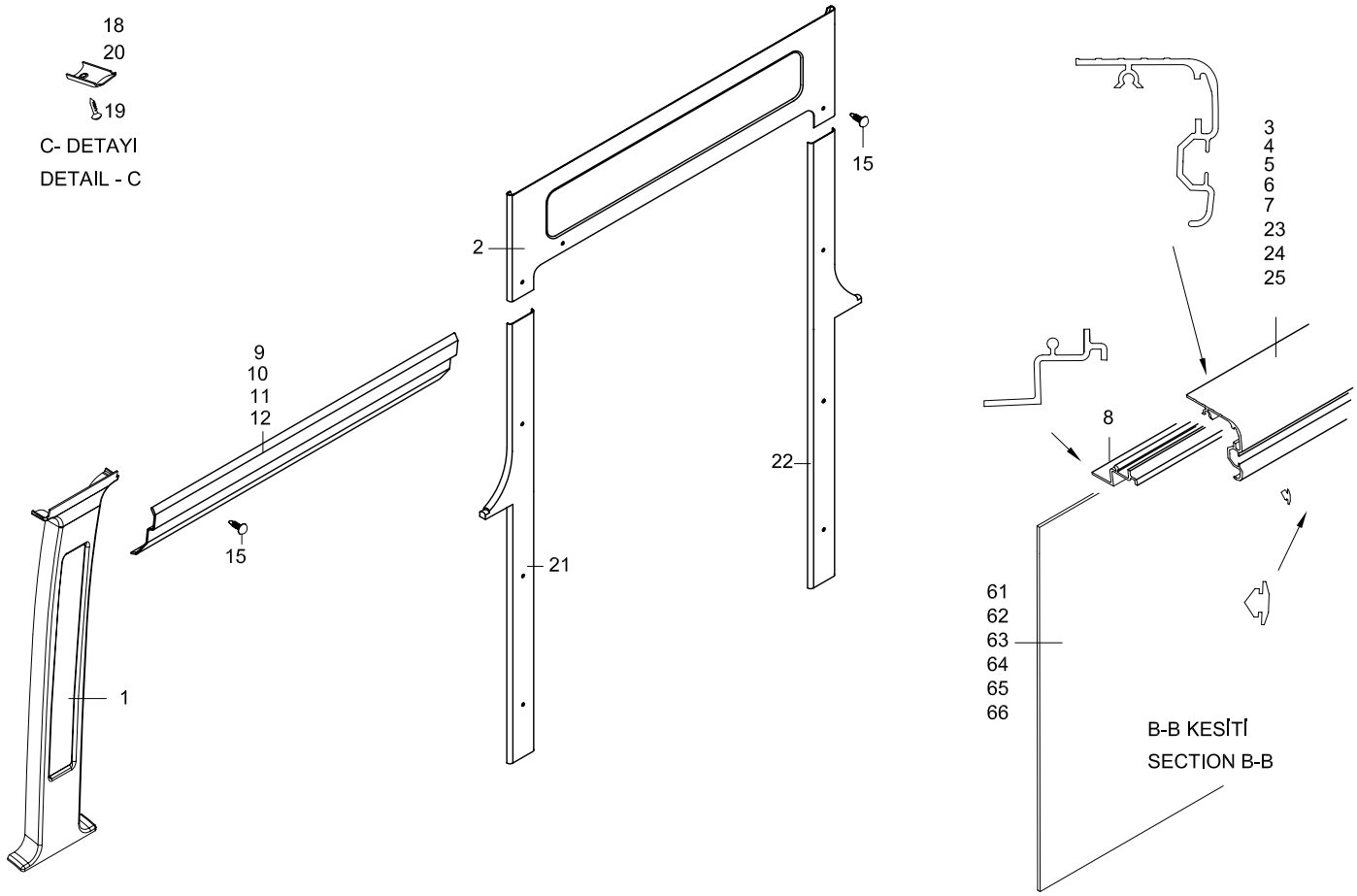

SOL İÇ GÖRÜNÜŞ
INSIDE VIEW - LH

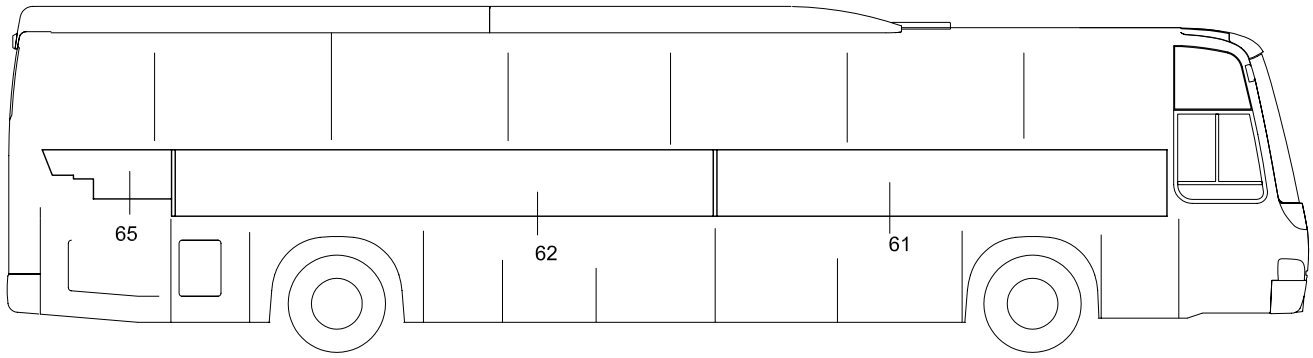

SAĞ İÇ GÖRÜNÜŞ
INSIDE VIEW - RH

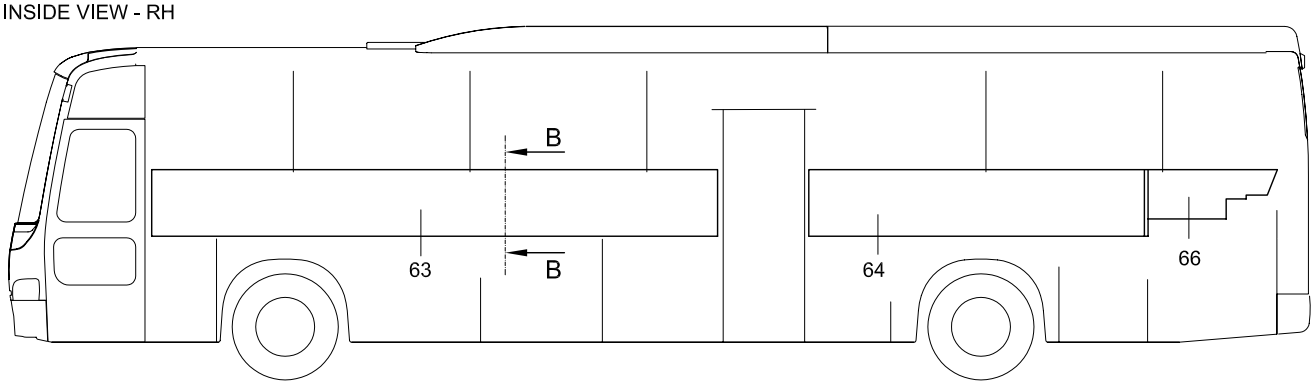

TEMSA	İç yan trim Inside trimming Innenverkleidung	Drw.no: 63117-97000-70/ 63113-97010-70-71 Vehicle Model: **TB162Z** **TB163Z**	**30-035** RevDate: Page: 1

Pos	Part Number	Turkish	English	German	Qty	R/P	From	Up To	Original Number Supplier
1	63113-90150-02Y	DİREK KAPAĞI	COVER PILLAR		11		1		
2	63113-97216-02Y	ORTA KAPI KAPLAMASI - ÜST	COVER CENTER DOOR - UPPER		1		1	???	
2	63113-97216-04Y	ORTA KAPI KAPLAMASI - ÜST	COVER CENTER DOOR - UPPER		1		???		
3	63113-92011-03Y	FİTİL	MOULDING		1		1		L:1160mm
4	TC326693-31Y	FİTİL	MOULDING		7		1		L:1740mm
5	63113-97010-05Y	FİTİL	MOULDING		1		1		L:888mm
6	63113-97010-06Y	FİTİL	MOULDING		1		1		L:1067mm
7	63113-97010-07Y	FİTİL	MOULDING		1		1		L:1605mm
8	63113-80100-00BY	ÇERÇEVE	FRAME		MT		1		
9	63113-97010-51Y	L-PLAKA	PLATE-L		4		1		
10	63113-97010-52Y	L-PLAKA	PLATE-L		4		1		
11	63113-90028-31Y	L-PLAKA	PLATE-L		4		1		
12	63113-90028-34Y	L-PLAKA	PLATE-L		4		1		
14	73108-00050-05Y	FİTİL	MOULDING		AR		1		
15	TU344112Y	PLASTİK PERÇİN	PLASTIC RIVET		AR		1		
18	63122-70128-04Y	FİTİL BAŞLIĞI	MOULDING END		3		1		
19	MF457583Y	VİDA	SCREW		AR		1		
20	63122-70128-03Y	FİTİL BAŞLIĞI	MOULDING END		1		1		
21	63113-97216-01Y	ORTA KAPI KAPLAMASI	COVER CENTER DOOR		1		1		
22	63113-97216-03Y	ORTA KAPI KAPLAMASI	COVER CENTER DOOR		1		1		
23	63113-97010-23Y	FİTİL	MOULDING		1		1		L:1067mm
24	63113-94011-24Y	FİTİL	MOULDING		1		1		L:1722mm
25	63113-92011-25Y	FİTİL	MOULDING		1		1		L:1160mm
61	63117-97100-01Y	İÇ PANEL	PANEL INNER		1		1		
62	63117-97100-02Y	İÇ PANEL	PANEL INNER		1		1		
63	63117-97100-03Y	İÇ PANEL	PANEL INNER		1		1		
64	63117-97100-04Y	İÇ PANEL	PANEL INNER		1		1		
65	63117-97100-05Y	İÇ PANEL	PANEL INNER		1		1		
66	63117-97100-06Y	İÇ PANEL	PANEL INNER		1		1		

TEMSA	İç yan trim Inside trimming Innenverkleidung	Group No : 30-036 Draw. Num. : x Rev. Date : Page : 1
	Vehicle Model: TB162Y, TB163Y	

SOL İÇ GÖRÜNÜŞ
INSIDE VIEW - LH

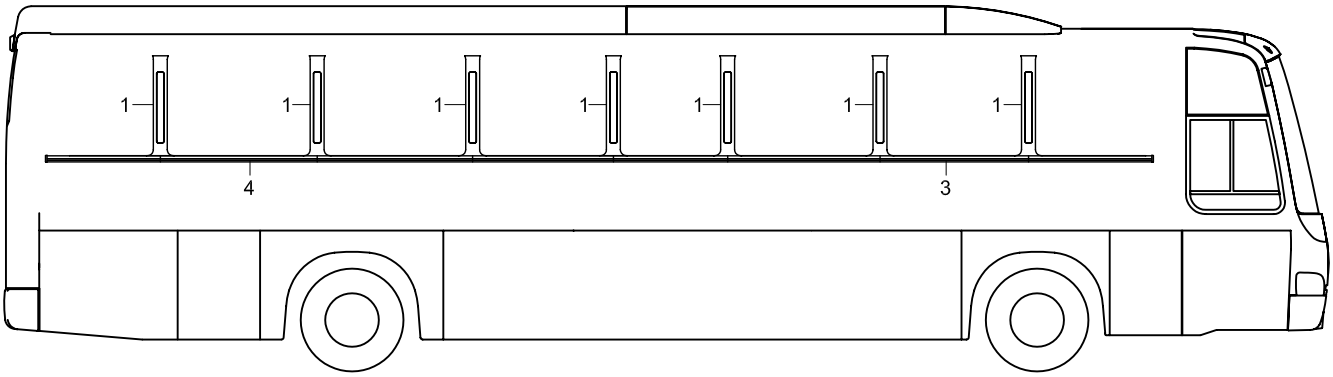

SAĞ İÇ GÖRÜNÜŞ
INSIDE VIEW - RH

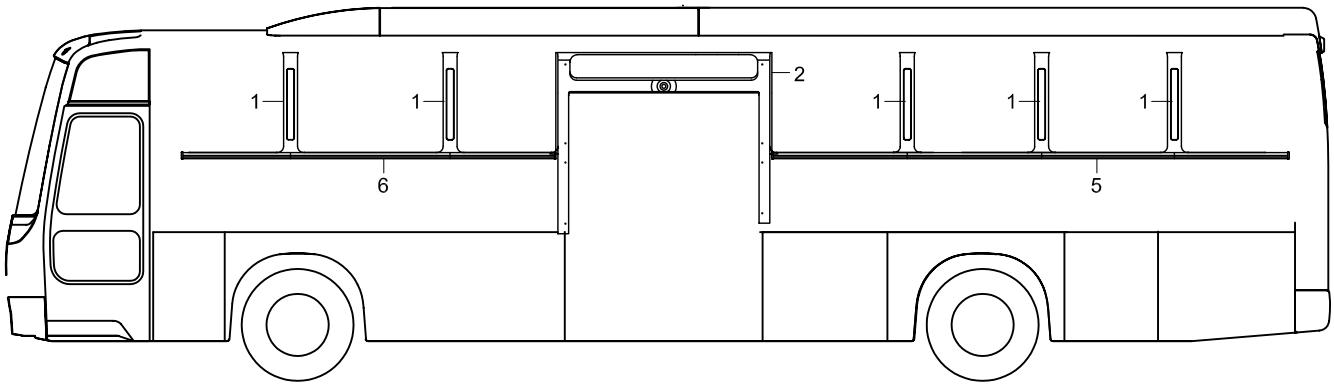

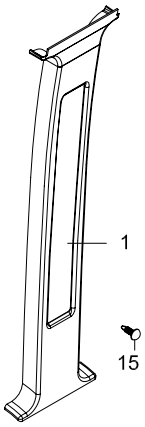

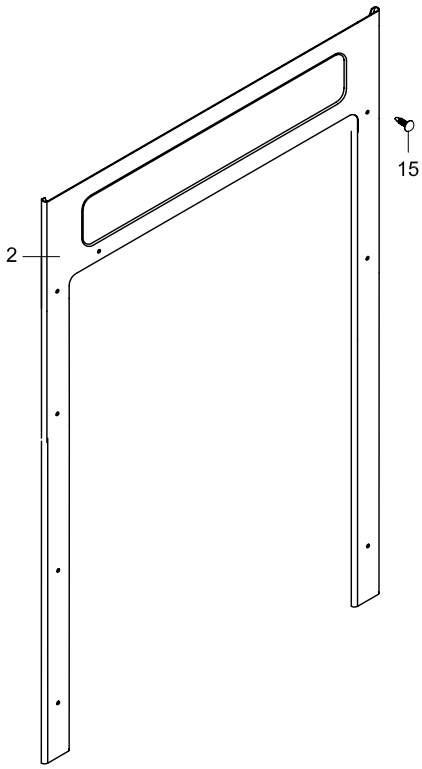

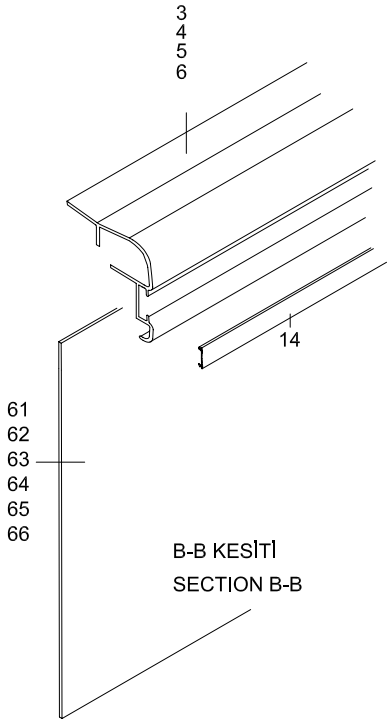

SOL İÇ GÖRÜNÜŞ
INSIDE VIEW - LH

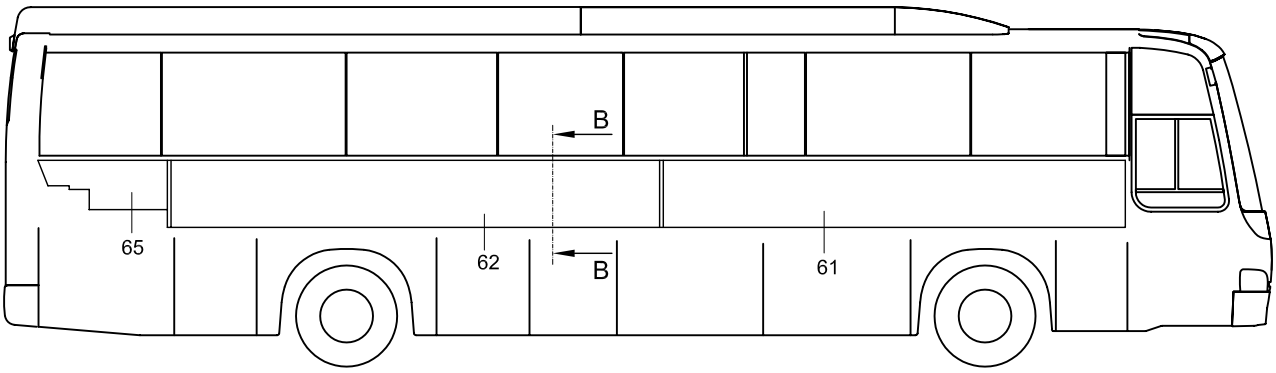

SAĞ İÇ GÖRÜNÜŞ
INSIDE VIEW - RH

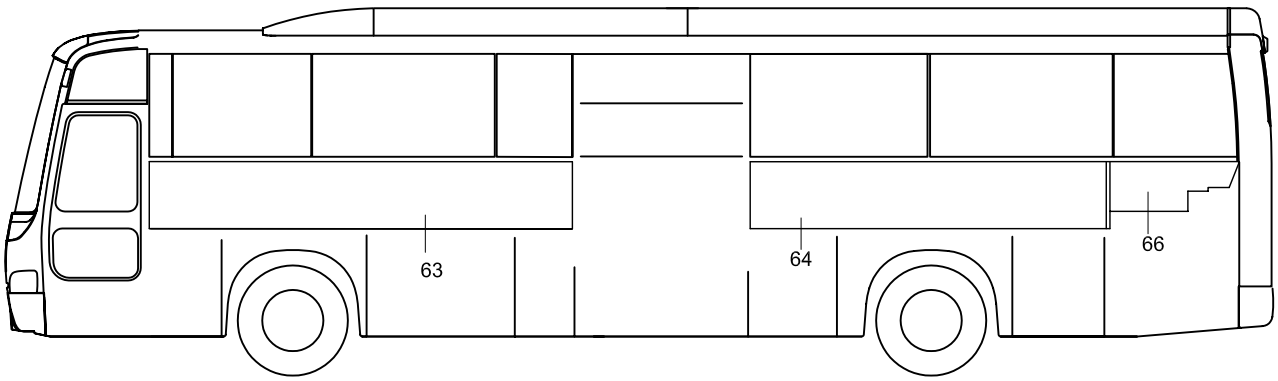

TEMSA	İç yan trim Inside trimming Innenverkleidung	Drw.no: 63117-99000-70 / 63113-99010-70 Vehicle Model: **TB162Y** **TB163Y**	**30-036** RevDate: Page: 1

Pos	Part Number	Turkish	English	German	Qty	R/P	From	Up To	Original Number Supplier
1	63113-96410-01Y	DİREK KAPAĞI	COVER PILLAR		12		010504		
2	63113-99110-02Y	ORTA KAPI KAPLAMASI - ÜST	COVER CENTER DOOR - UPPER		1		010504		
3	63113-99010-03Y	FİTİL	MOULDING		1		010504		
4	63113-99010-04Y	FİTİL	MOULDING		1		010504		
5	63113-99010-05Y	FİTİL	MOULDING		1		010504		
6	63113-99010-06Y	FİTİL	MOULDING		1		010504		
14	63113-99010-14Y	FİTİL	MOULDING		MT		010504		
15	TU344112Y	PLASTİK PERÇİN	PLASTIC RIVET		AR		1		
61	63117-99100-01Y	İÇ PANEL	PANEL INNER		1		010504		
62	63117-99100-02Y	İÇ PANEL	PANEL INNER		1		010504		
63	63117-99100-03Y	İÇ PANEL	PANEL INNER		1		010504		
64	63117-99100-04Y	İÇ PANEL	PANEL INNER		1		010504		
65	63117-97100-05Y	İÇ PANEL	PANEL INNER		1		1		
66	63117-97100-06Y	İÇ PANEL	PANEL INNER		1		1		

TEMSA	Yolcu rafları Luggage racks	Group No : 30-040 Draw. Num. : x Rev. Date :
	Vehicle Model: TB162W, TB162X, TB163W, TB163X,	Page : 1

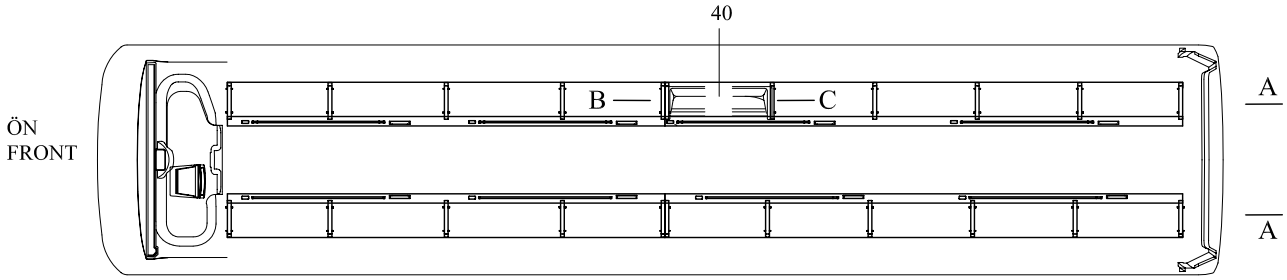

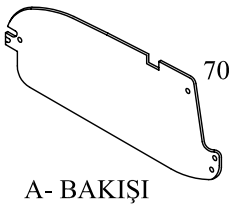

A- BAKIŞI
VIEW- A

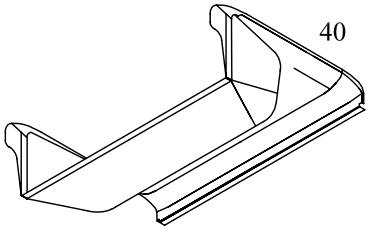

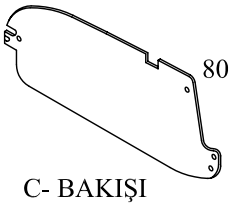

C- BAKIŞI
VIEW- C

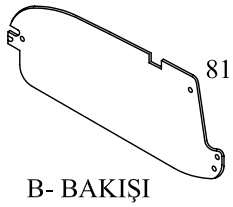

B- BAKIŞI
VIEW- B

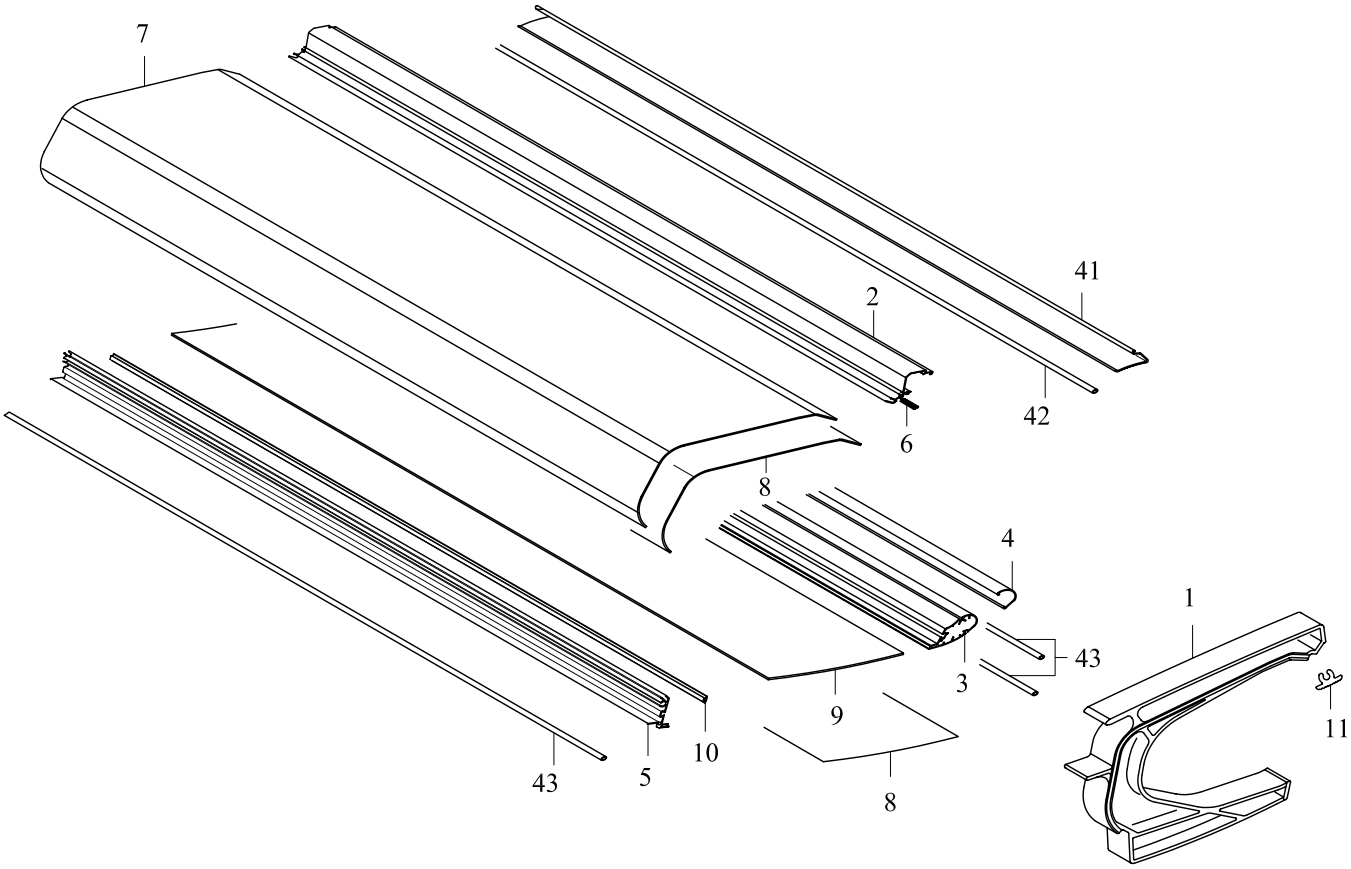

TEMSA	Yolcu rafları Luggage racks	Group No : 30-040 Draw. Num. : x Rev. Date :
	Vehicle Model: TB162W, TB162X, TB163W, TB163X,	Page : 2

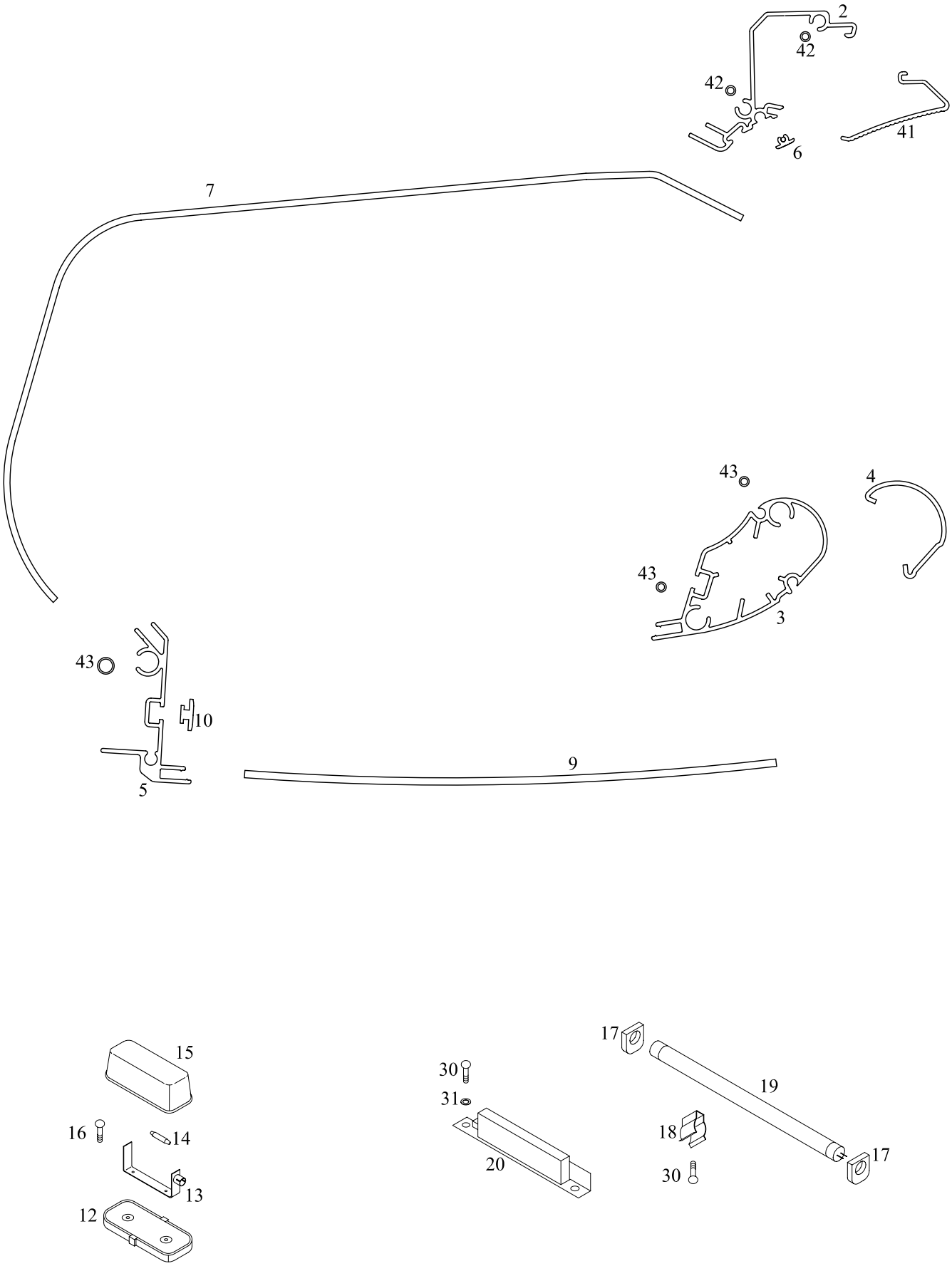

TEMSA	Yolcu rafları Luggage racks	Drw.no: 63314-96016-70 Vehicle Model: **TB162W, TB162X** **TB163W, TB163X**	**30-040** RevDate: Page: 1

Pos	Part Number	Turkish	English	German	Qty	R/P	From	Up To	Original Number Supplier
1	3450053	RAF BRAKETİ	SUPPORT RACK		22		1		ELLAMP
2	5500268	LAMBA PROFİLİ	LIGHT PROFILE		4		1		ELLAMP
3	5500261	TRABZAN	HAND RAIL		4		1		ELLAMP
4	3300029	TRABZAN	HAND RAIL		4		1		ELLAMP
5	5500267	MULTI SET PROFİLİ	MULTISET PROFILE		4		1		ELLAMP
6	3300016	LAMBA PROFİLİ	LIGHT PROFILE		4		1		ELLAMP
7	3220040	RAF PANELİ İÇ	INTERNAL EXTRUSION		4		1		ELLAMP
8	3010090	YÜZEY KAPLAMASI RENKSİZ	INTERNAL FABRIC COLORLESS		AR		1		ELLAMP
9	P770000006-01	RAF PANELİ İÇ	INTERNAL EXTRUSION		4		1		ELLAMP
10	3300063	VİDA KAPAMA PROFİLİ	CLOSING SCREW PROFILE		4		1		ELLAMP
11	3300037	FİTİL	MOULDING		4		1		ELLAMP
12	3410019	LAMBA KAİDESİ	BASE FOR BULB LAMP		8		1		ELLAMP
13	3020151	LAMBA YUVASI	BULB LAMP HOLDER		8		1		ELLAMP
14	3060029	AMPUL	BULB		8		1		ELLAMP delete
14	TF820512Y	AMPUL 24V 5W	BULB 24V 5W		8		?		
15	3410002	GECE LAMBASI CAMI	NIGHT LIGHT COVERING		8		1		ELLAMP
16	MF200027Y	VİDA	SCREW		AR		1		
17	3020132	DUY	LIGHT SOCKET		16		1		ELLAMP
18	3100157	LAMBA TUTUCU	LAMP HOLDER		16		1		ELLAMP
19	3060054	FLUORESAN LAMBA 35W	FLUORESCENT LAMBA 35W		8		1		ELLAMP
20	4966114	INVERTER	INVERTER		8		1		ELLAMP
30	MF200155Y	VİDA	SCREW		AR		1		
31	MF450002Y	PUL	WASHER		AR		1		
40	A70400300-001	KAPI KABİNİ	DOOR CABINET		1		1		ELLAMP
41	3420093	LAMBA KAPAĞI	LIGHT DIFFUSER		4		1		ELLAMP
42	3550009	MİL	PIVOT		4		1		ELLAMP
43	2090036	KLAVUZ MİL	PIM		4		1		ELLAMP
50	2090036	KLAVUZ MİL	PIM		6		1		ELLAMP
70	63314-90016-07Y	KAPAK	COVER REAR END		2		1		
80	63314-90017-05Y	KAPAK	COVER CENTER DOOR		1		1		
81	63314-90017-06Y	KAPAK	COVER CENTER DOOR		1		1		

TEMSA	Yolcu rafları Luggage racks	Group No : 30-045 Draw. Num. : x Rev. Date :
	Vehicle Model: TB162Z, TB162Y, TB163Z, TB163Y	Page : 1

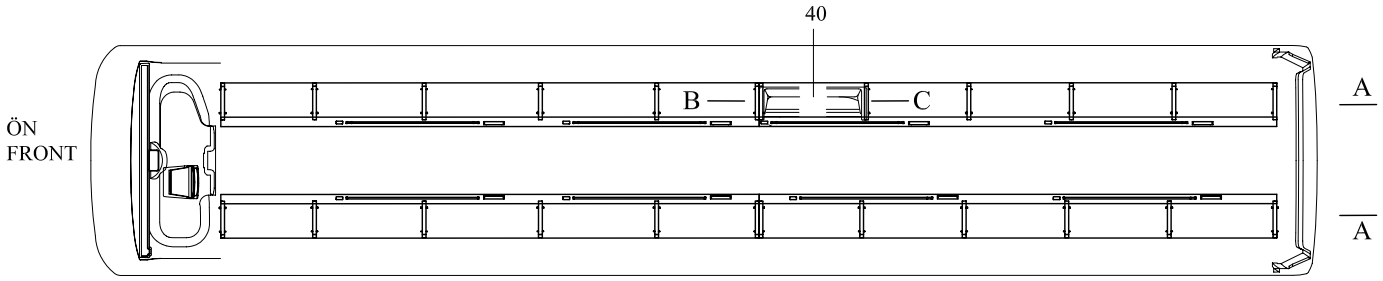

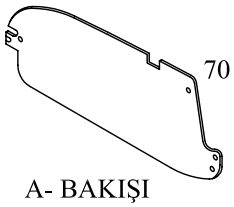

A- BAKIŞI
VIEW- A

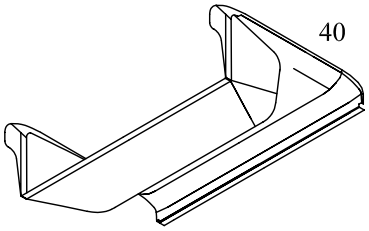

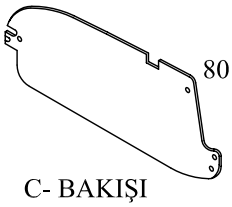

C- BAKIŞI
VIEW- C

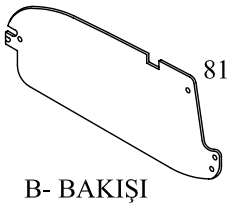

B- BAKIŞI
VIEW- B

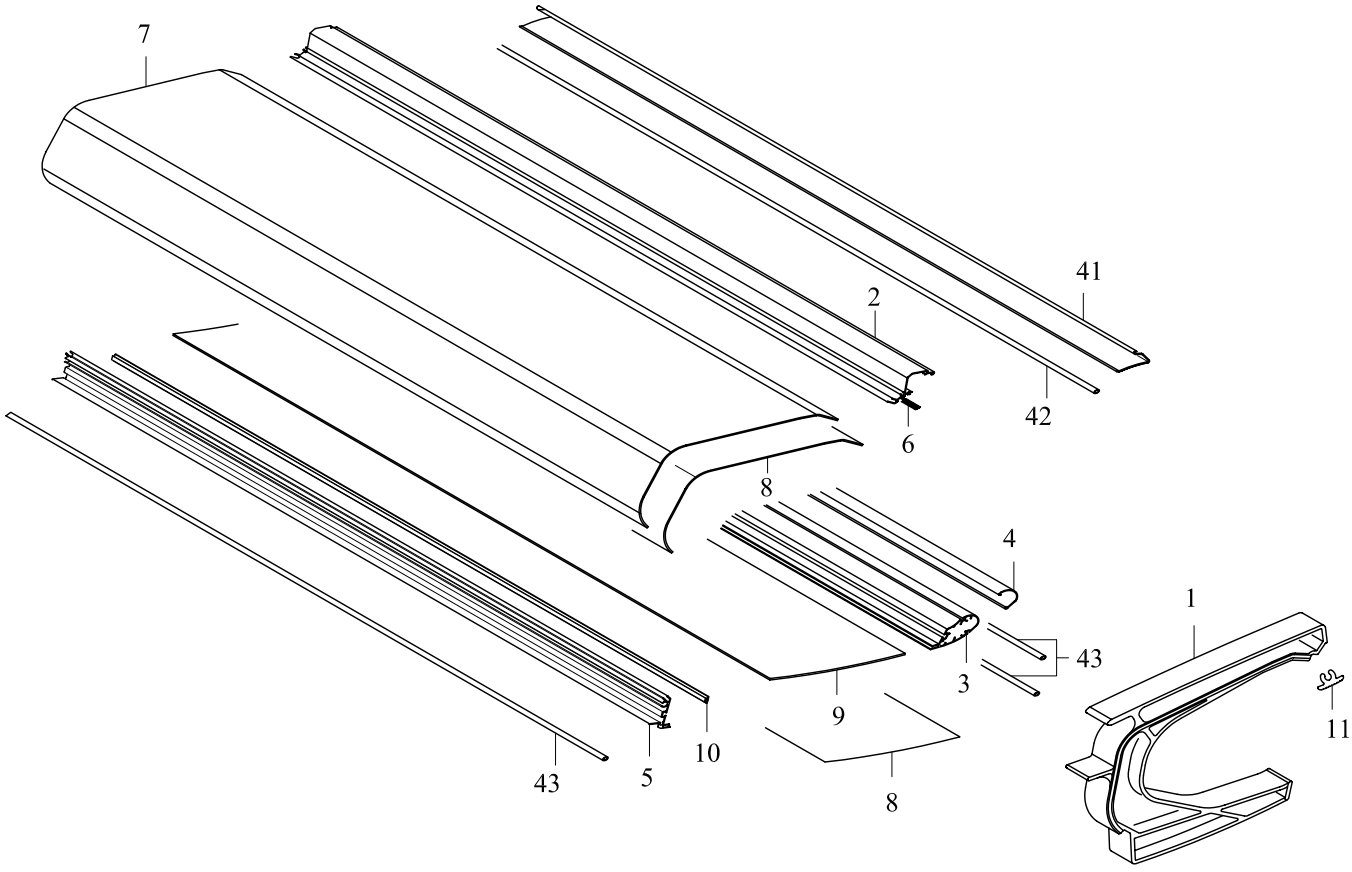

TEMSA	Yolcu rafları Luggage racks	Group No : 30-045 Draw. Num. : x Rev. Date :
	Vehicle Model: TB162Z, TB162Y, TB163Z, TB163Y	Page : 2

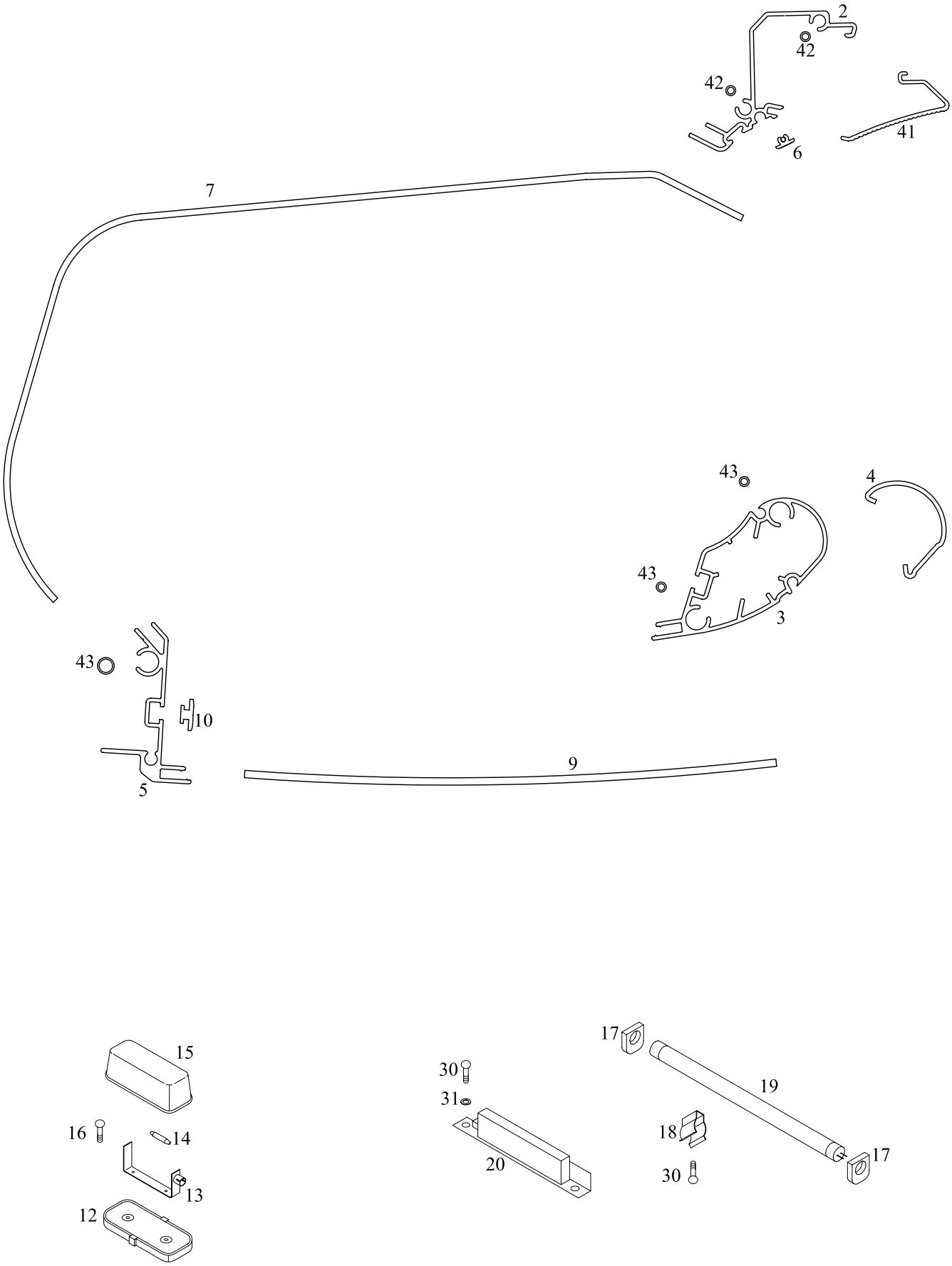

TEMSA	Yolcu rafları Luggage racks	Drw.no: 63314-97016-70Y Vehicle Model: **TB162Z, TB162Y** **TB163Z, TB163Y**	**30-045** RevDate: Page: 1

Pos	Part Number	Turkish	English	German	Qty	R/P	From	Up To	Original Number Supplier
1	3450053	RAF BRAKETİ	SUPPORT RACK		24		1		ELLAMP
2	5500268	LAMBA PROFİLİ	LIGHT PROFILE		4		1		ELLAMP
3	5500261	TRABZAN	HAND RAIL		4		1		ELLAMP
4	3300029	TRABZAN	HAND RAIL		4		1		ELLAMP
5	5500267	MULTI SET PROFİLİ	MULTISET PROFILE		4		1		ELLAMP
6	3300016	LAMBA PROFİLİ	LIGHT PROFILE		4		1		ELLAMP
7	3220040	RAF PANELİ İÇ	INTERNAL EXTRUSION		4		1		ELLAMP
8	3010090	YÜZEY KAPLAMASI RENKSİZ	INTERNAL FABRIC COLORLESS		AR		1		ELLAMP
9	P770000006-01	RAF PANELİ İÇ	INTERNAL EXTRUSION		4		1		ELLAMP
10	3300063	VİDA KAPAMA PROFİLİ	CLOSING SCREW PROFILE		4		1		ELLAMP
11	3300037	FİTİL	MOULDING		4		1		ELLAMP
12	3410019	LAMBA KAİDESİ	BASE FOR BULB LAMP		8		1		ELLAMP
13	3020151	LAMBA YUVASI	BULB LAMP HOLDER		8		1		ELLAMP delete
14	3060029	AMPUL	BULB		8		1	?	
14	TF820512Y	AMPUL 24V 5W	BULB 24V 5W		8		?		
15	3410002	GECE LAMBASI CAMI	NIGHT LIGHT COVERING		8		1		ELLAMP
16	MF200027Y	VİDA	SCREW		AR		1		
17	3020132	DUY	LIGHT SOCKET		16		1		ELLAMP
18	3100157	LAMBA TUTUCU	LAMP HOLDER		16		1		ELLAMP
19	3060054Y	FLUORESAN LAMBA 35W	FLUORESCENT LAMBA 35W		8		1		ELLAMP
20	4966114Y	INVERTER	INVERTER		8		1		ELLAMP
30	MF200155Y	VİDA	SCREW		AR		1		
31	MF450002Y	PUL	WASHER		AR		1		
40	A70400300-001	KAPI KABİNİ	DOOR CABINET		1		1		ELLAMP
41	3420093	LAMBA KAPAĞI	LIGHT DIFFUSER		4		1		ELLAMP
42	3550009	MİL	PIVOT		4		1		ELLAMP
43	2090036	KLAVUZ MİL	PIM		4		1		ELLAMP
50	2090036	KLAVUZ MİL	PIM		6		1		ELLAMP
70	63314-90016-07Y	KAPAK	COVER REAR END		2		1		
80	63314-90017-05Y	KAPAK	COVER CENTER DOOR		1		1		
81	63314-90017-06Y	KAPAK	COVER CENTER DOOR		1		1		

TEMSA	Raf kapakları Rack lids	Group No : 30-050 Draw. Num. : x Rev. Date : Page : 1
	Vehicle Model: TB162W, TB162Z, TB162X, TB162Y, TB163W, TB163Z, TB163X, TB163Y	

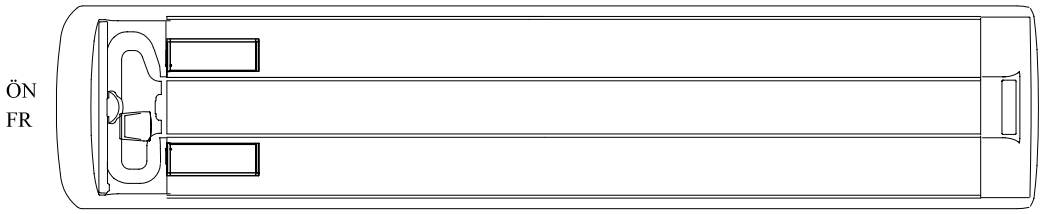

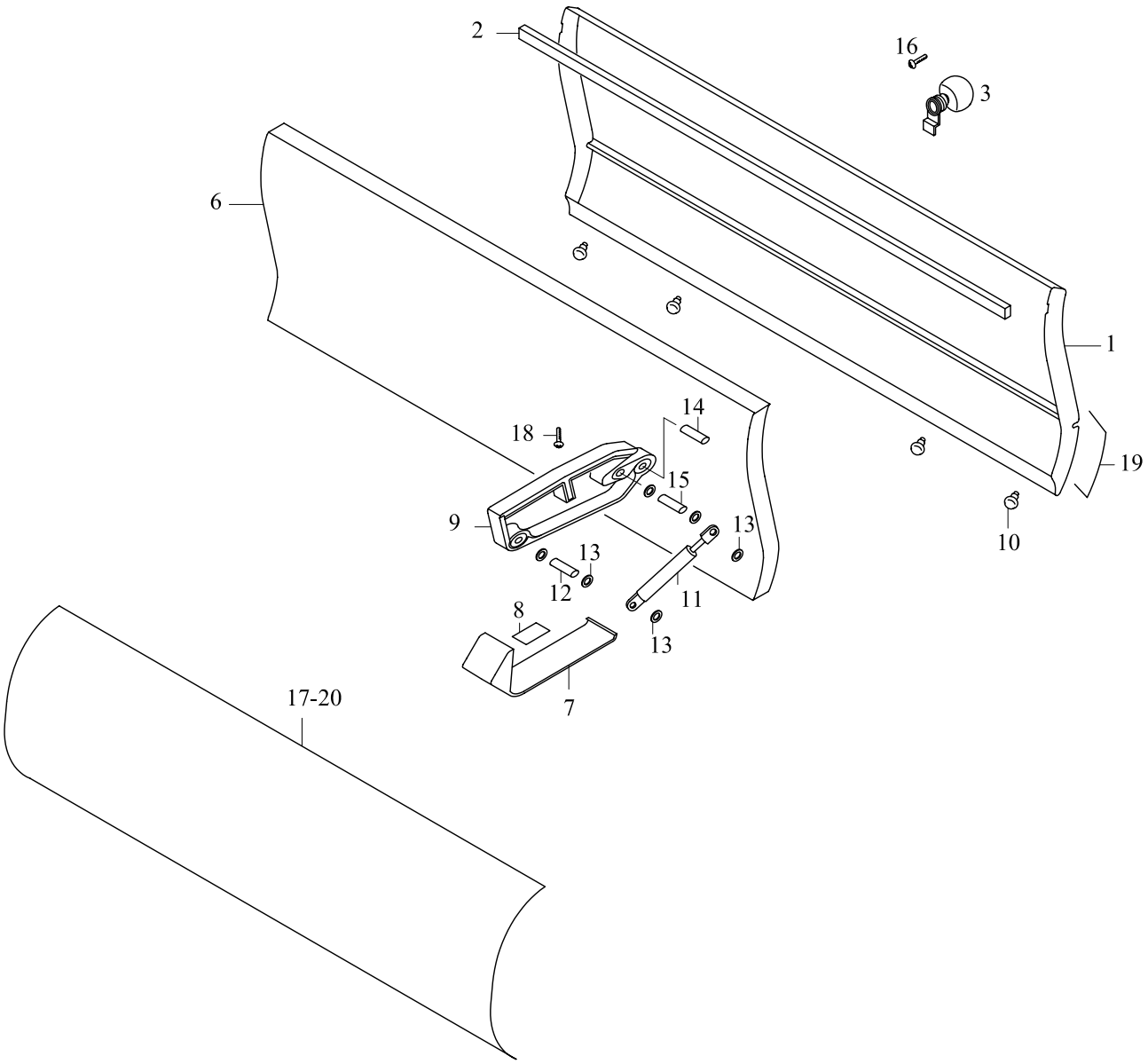

TEMSA	Raf kapakları Rack lids	Drw.no: 63314-80200-70 Vehicle Model: **TB162W, TB162Z, TB162X, TB162Y** **TB163W, TB163Z, TB163X, TB163Y**	**30-050** RevDate: Page: 1

Pos	Part Number	Turkish	English	German	Qty	R/P	From	Up To	Original Number Supplier
1	3210084	RAF KAPAĞI	RACK LID		2		1		ELLAMP
2	2090001	KANAT PROFİLİ	FLAPS PROFILE		2		1		ELLAMP
3	3100034	KİLİT KOMPLE	LOCK ASSY		2		1		ELLAMP
6	3550509	KAPAK İÇ PANELİ	INTERNAL SHEET		2		1		ELLAMP
7	3210125	AMORTİSÖR KAPAĞI	PISTON COVER		2		1		ELLAMP
8	TU205100Y	ARA PARÇA	DUOTECH		4		1		
9	3450038	PİSTON DESTEĞİ	PİSTON SUPPORT		2		1		ELLAMP
10	3140015	STOPLAYICI	STOPPER		8		1		ELLAMP
11	3100191Y	AMORTİSÖR	GAS SPRING		4		1		ELLAMP
12	3550361	MİL	PIVOT		4		1		ELLAMP
13	3100173	SEGMAN	SEIGER		12		1		ELLAMP
14	3550006	MİL	PIVOT		4		1		ELLAMP
15	3551028	MİL	PIVOT		4		1		ELLAMP
16	TF453003Y	VİDA	SCREW		AR		1		ELLAMP
17	63314-90017-01Y	KAPLAMA PANELİ	FLAP CLOSING		1		1		
18	TF457595Y	VİDA	SCREW		AR		1		ELLAMP
19	3010090	YÜZEY KAPLAMASI RENKSİZ	INTERNAL FABRIC COLORLESS		AR		1		
20	63314-90017-02Y	KAPLAMA PANELİ	FLAP CLOSING		1		1		

TEMSA	Raf kapakları Rack lids	Group No : 30-051 Draw. Num. : x Rev. Date : Page : 1
	Vehicle Model: TB162Z TB163Z	

option code: BRAF_KAPAK_TIPI02

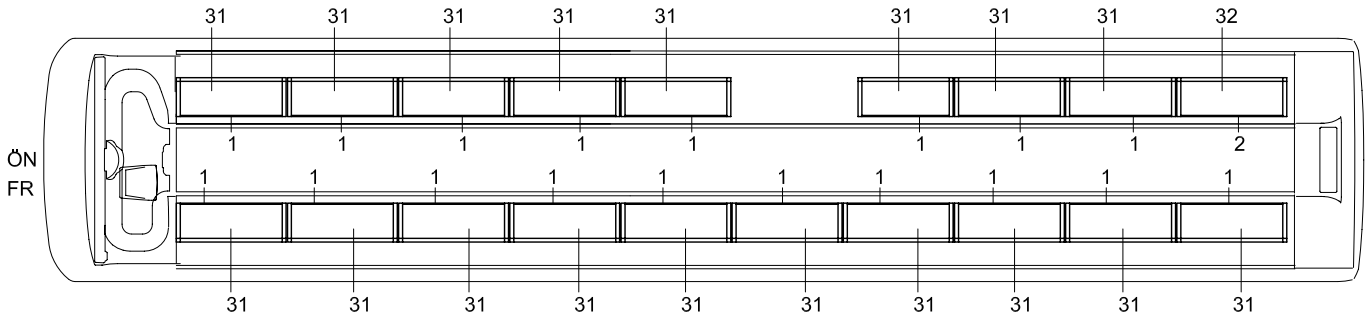

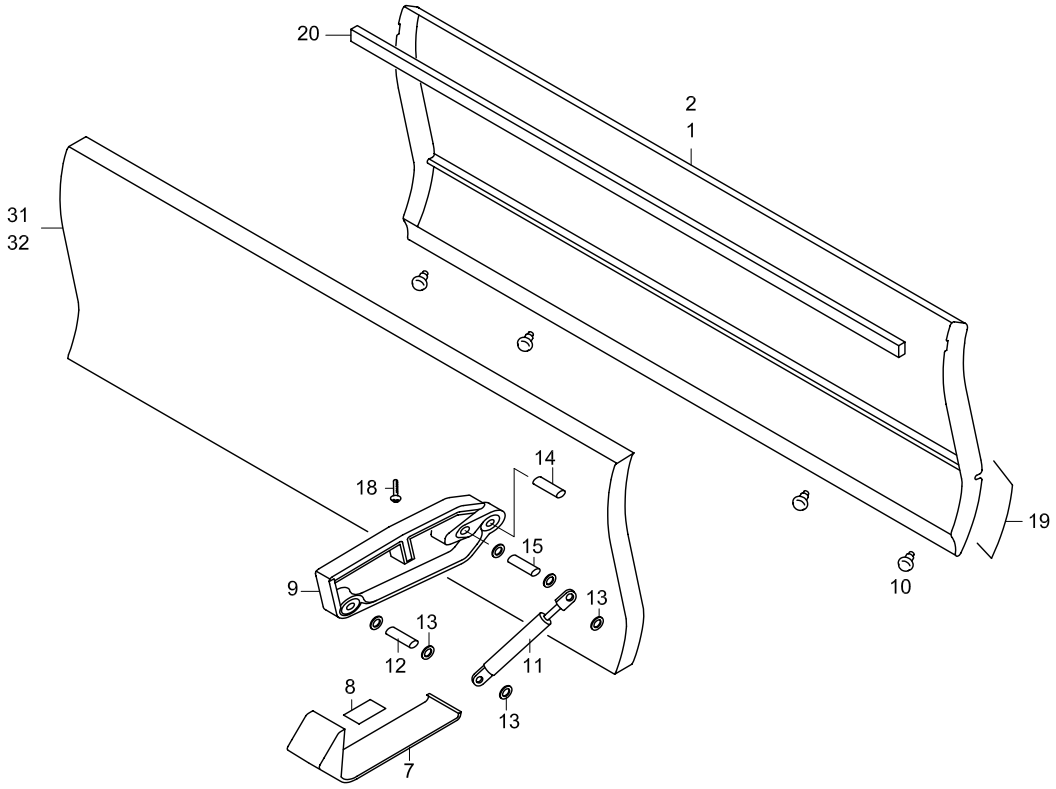

TEMSA	Raf kapakları Rack lids	Drw.no: 63314-97300-70Y Vehicle Model: **TB162Z** **TB163Z**	**30-051** RevDate: Page: 1

Pos	Part Number	Turkish	English	German	Qty	R/P	From	Up To	Original Number Supplier
1	3010079013-001	RAF KAPAĞI	RACK FLAP		18		1		ELLAMP L:1090mm
2	3010079013-001	RAF KAPAĞI	RACK FLAP		1		1		ELLAMP L:1143mm
7	3210125	AMORTİSÖR KAPAĞI	PISTON COVER		38		1		ELLAMP
8	TU205100Y	ARA PARÇA	DUOTECH		38		1		
9	3450038	PİSTON DESTEĞİ	PISTON SUPPORT		2		1		ELLAMP
10	3140015	STOPLAYICI	STOPPER		8		1		ELLAMP
11	3100191Y	AMORTİSÖR	GAS SPRING		38		1		ELLAMP
12	3550361	MİL	PIVOT		4		1		ELLAMP
13	3100173	SEGMAN	SEIGER		12		1		ELLAMP
14	3550006	MİL	PIVOT		4		1		ELLAMP
15	3551028	MİL	PIVOT		4		1		ELLAMP
18	TF457595Y	VİDA	SCREW		AR		1		ELLAMP
19	3010090	YÜZEY KAPLAMASI RENKSİZ	INTERNAL FABRIC COLORLESS		AR		1		
20	2090001	KAPLAMA PANELİ	FLAP CLOSING		1		1		
31	8900051492-001	KAPAK İÇ PANELİ	INTERNAL SHEET		37		1		L:1080mm
32	TN221112Y	KAPAK İÇ PANELİ	INTERNAL SHEET		1		1		L:1133mm

TEMSA	Raf kapakları Rack lids	Group No : 30-052 Draw. Num. : x Rev. Date : Page : 1
	Vehicle Model: TB162W, TB163W,	

option code: BRAF_KAPAK_TIPI02

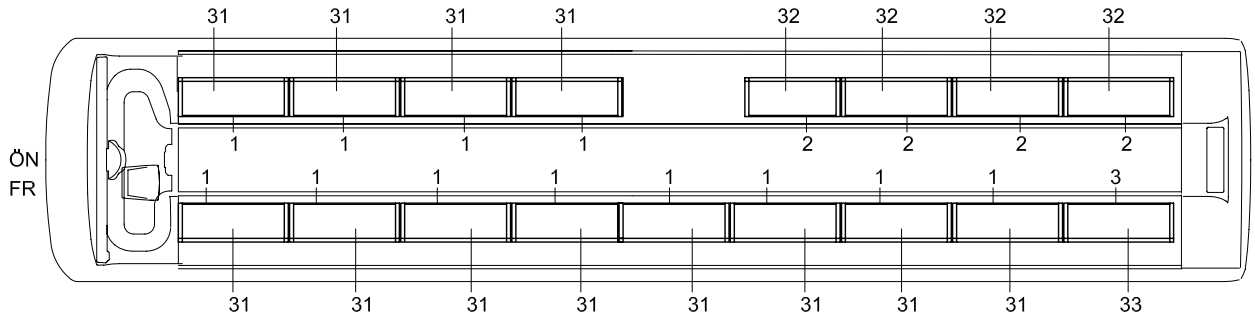

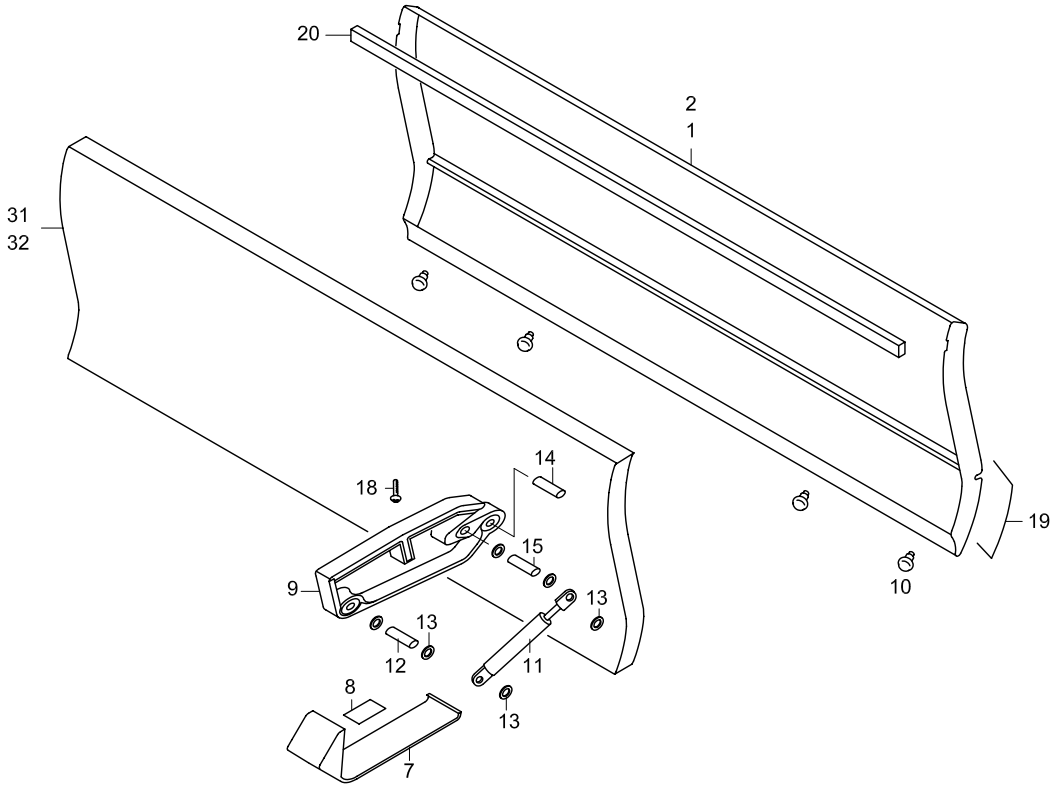

TEMSA	Raf kapakları Rack lids	Drw.no: 63314-96100-70Y Vehicle Model: **TB162W** **TB163W**	**30-052** RevDate: Page: 1

Pos	Part Number	Turkish	English	German	Qty	R/P	From	Up To	Original Number Supplier
1	3010079013-001	RAF KAPAĞI	RACK FLAP		12		1		ELLAMP L:1090mm
2	3010079013-001	RAF KAPAĞI	RACK FLAP		4		1		ELLAMP L:1236,5mm
3	3010079013-001	RAF KAPAĞI	RACK FLAP		1		1		ELLAMP L:1123mm
7	3210125	AMORTİSÖR KAPAĞI	PISTON COVER		38		1		ELLAMP
8	TU205100Y	ARA PARÇA	DUOTECH		38		1		
9	3450038	PİSTON DESTEĞİ	PISTON SUPPORT		2		1		ELLAMP
10	3140015	STOPLAYICI	STOPPER		8		1		ELLAMP
11	3100191Y	AMORTİSÖR	GAS SPRING		38		1		ELLAMP
12	3550361	MİL	PIVOT		4		1		ELLAMP
13	3100173	SEGMAN	SEIGER		12		1		ELLAMP
14	3550006	MİL	PIVOT		4		1		ELLAMP
15	3551028	MİL	PIVOT		4		1		ELLAMP
18	TF457595Y	VİDA	SCREW		AR		1		ELLAMP
19	3010090	YÜZEY KAPLAMASI RENKSİZ	INTERNAL FABRIC COLORLESS		AR		1		
20	2090001	KAPLAMA PANELİ	FLAP CLOSING		1		1		
31	8900051492-001	KAPAK İÇ PANELİ	INTERNAL SHEET		12		1		
32	TN221117Y	KAPAK İÇ PANELİ	INTERNAL SHEET		4		1		L:1226,5mm
33	TN221118Y	KAPAK İÇ PANELİ	INTERNAL SHEET		1		1		L: 1113mm

TEMSA	Bölmeler ve tırabzan Partitions and parapet Trennungen und Geländer	Group No : 30-060 Draw. Num. : x Rev. Date : Page : 1
	Vehicle Model: TB162W, TB162Z, TB163W, TB163Z,	

ÖN SAĞ
FRONT RH

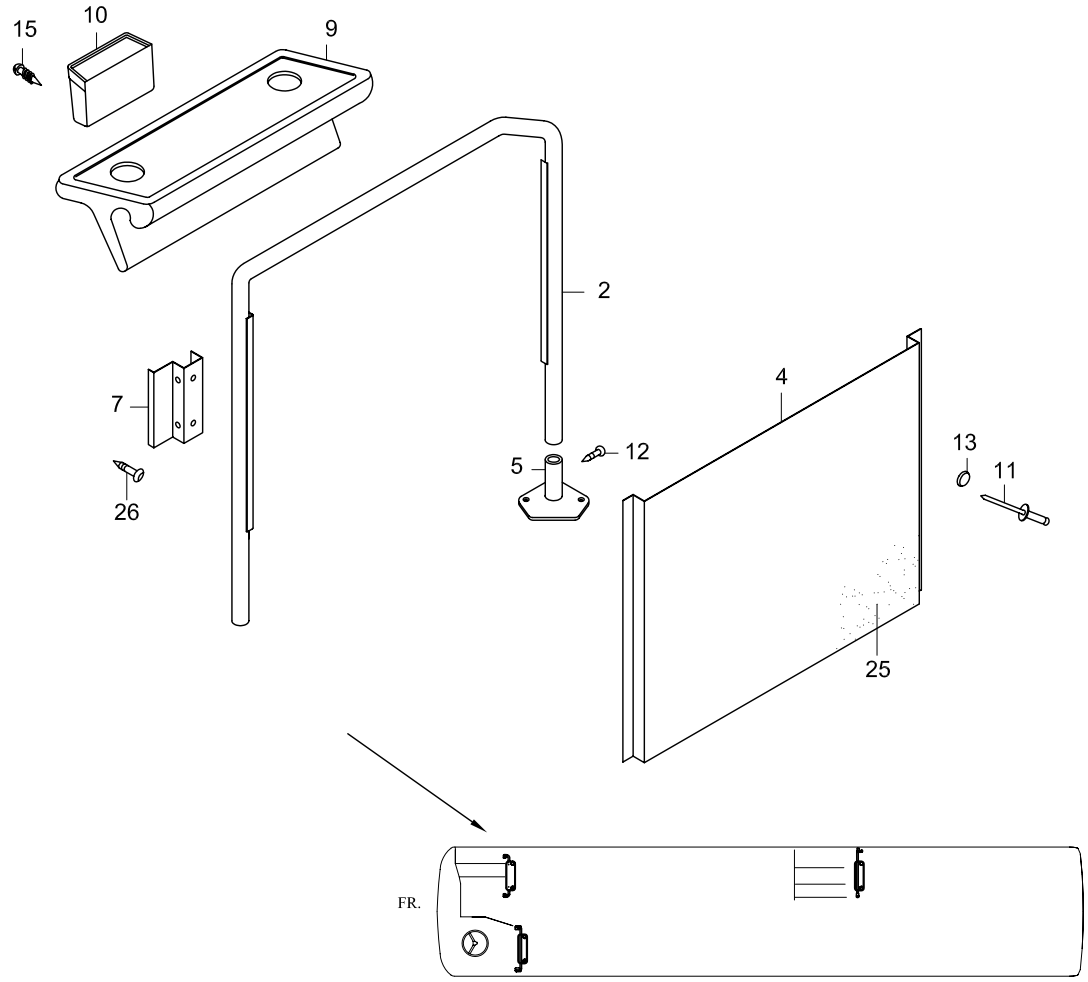

ÖN SOL
FRONT LH

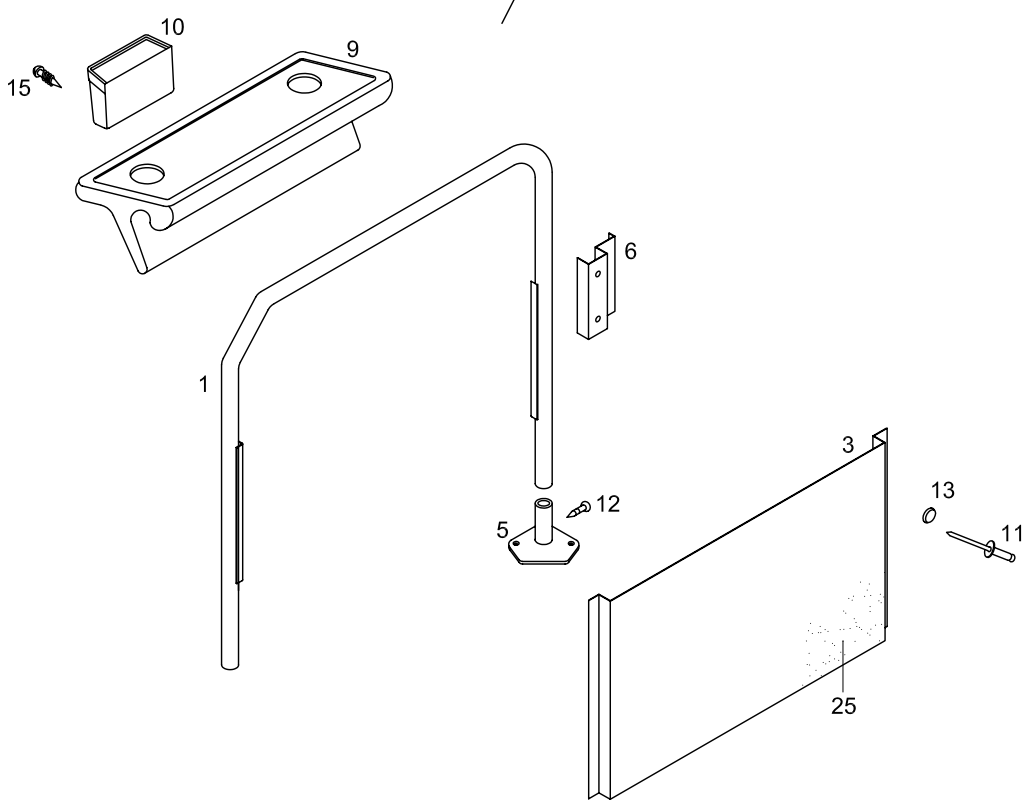

ORTA / ARKA
CENTER / REAR

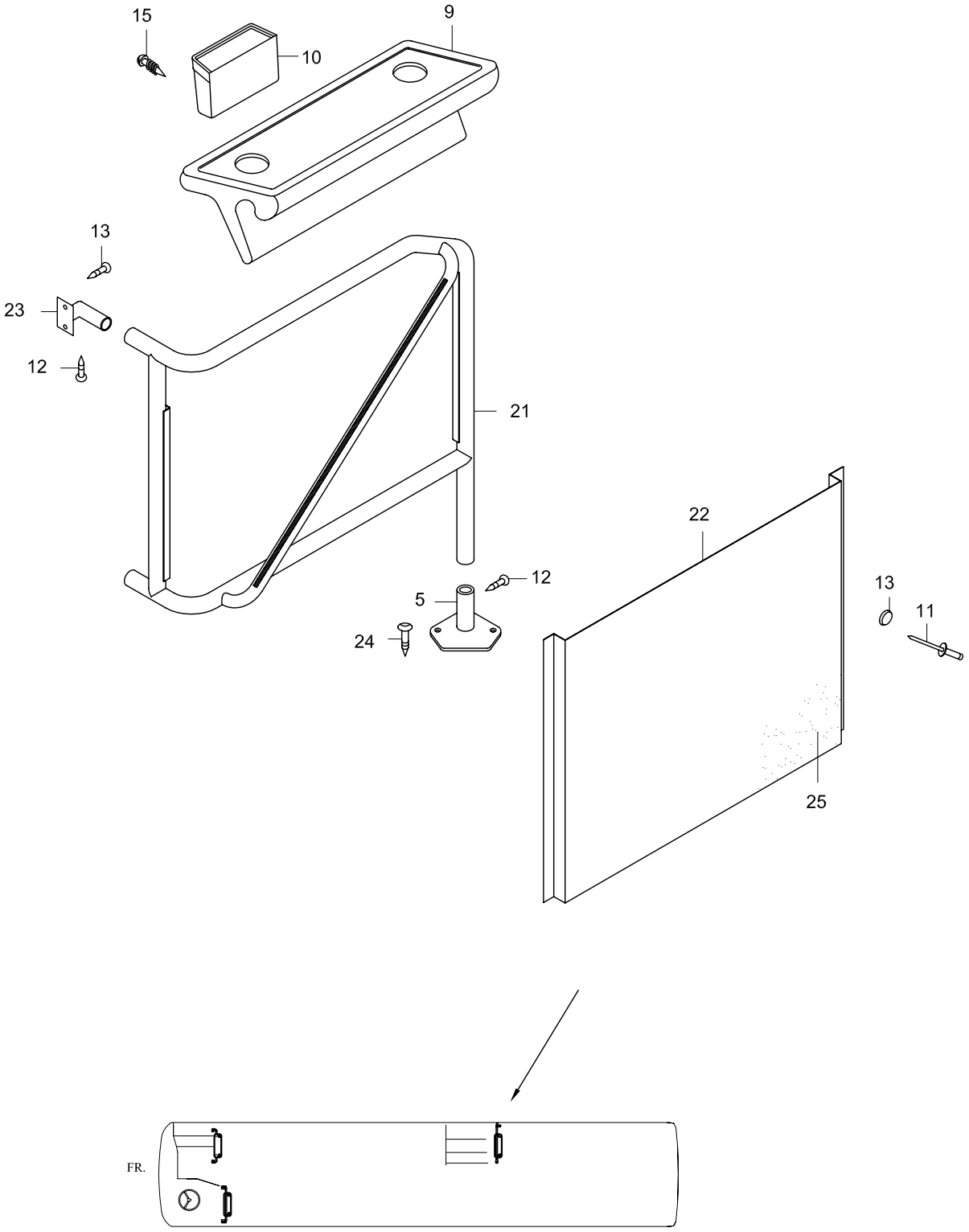

TEMSA	Bölmeler ve tırabzan Partitions and parapet Trennungen und Geländer	Drw.no:63272-96000-70/97000-70 Vehicle Model: **TB162W, TB162Z** **TB163W, TB163Z**	**30-060** RevDate: Page: 1

Pos	Part Number	Turkish	English	German	Qty	R/P	From	Up To	Original Number Supplier
1	63272-90026-12Y	BÖLME PANELİ BORUSU SOL	PARTITION PIPE - LH		1		1		
2	63272-90026-13Y	BÖLME PANELİ BORUSU SAĞ	PARTITION PIPE -RH		1		1		
3	63272-90136-01Y	BÖLME PANELİ - SOL	PARTITION PANEL - LH		1		1		
4	63272-90136-03Y	BÖLME PANELİ - SAĞ	PARTITION PANEL - RH		1		1		
5	63272-90018-10BY	BAĞLANTI	JOINT		3		1		
6	63272-90028-12Y	PLAKA	PLATE		1		1		
7	63272-90028-14Y	PLAKA	PLATE		1		1		
9	TM280240Y	TEPSİ	TRAY		3		1		
10	63285-30040-80Y	KÜLLÜK	ASH TRAY		3		1		
11	MA277895Y	KANCA	HOOK		AR		1		
12	TF200339Y	CIVATA	BOLT		AR		1		
13	TF457593Y	VİDA	SCREW		AR		1		
15	MF453033Y	VİDA	SCREW		AR		1		
21	63272-96016-14Y	BÖLME PANELİ BORUSU - ORT/AR	PARTITION PIPE-CENTER/REAR		1		1		
22	63272-96136-05Y	BÖLME PANELİ- ORTA/ARKA	PARTITION PANEL -CENTER/REAR		1		1		
23	63272-90018-13BY	BRAKET	BRACKET		2		1		
24	TF201579Y	VİDA	SCREW		AR		1		
25	TES40451-03Y	YÜZEY KAPLAMASI - GRİ	INTERNAL FABRIC - GRAY		AR		1		
26	MF201692Y	VİDA	SCREW		AR		1		

TEMSA	Bölmeler ve tırabzan - İsrail Partitions and parapet - Israel Trennungen und Geländer	Group No : 30-061 Draw. Num. : x Rev. Date : Page : 1
	Vehicle Model: TB162W,	

ÖN SAĞ
FRONT RH

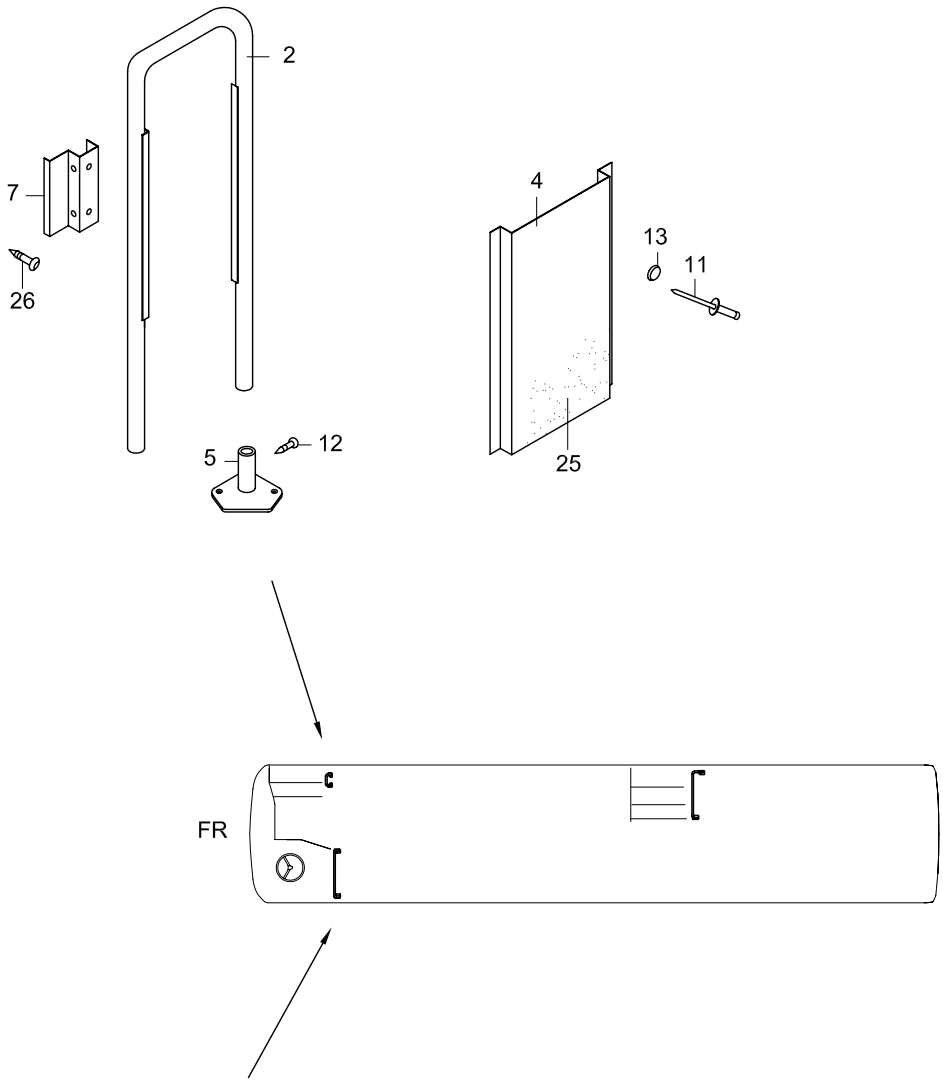

ÖN SOL
FRONT LH

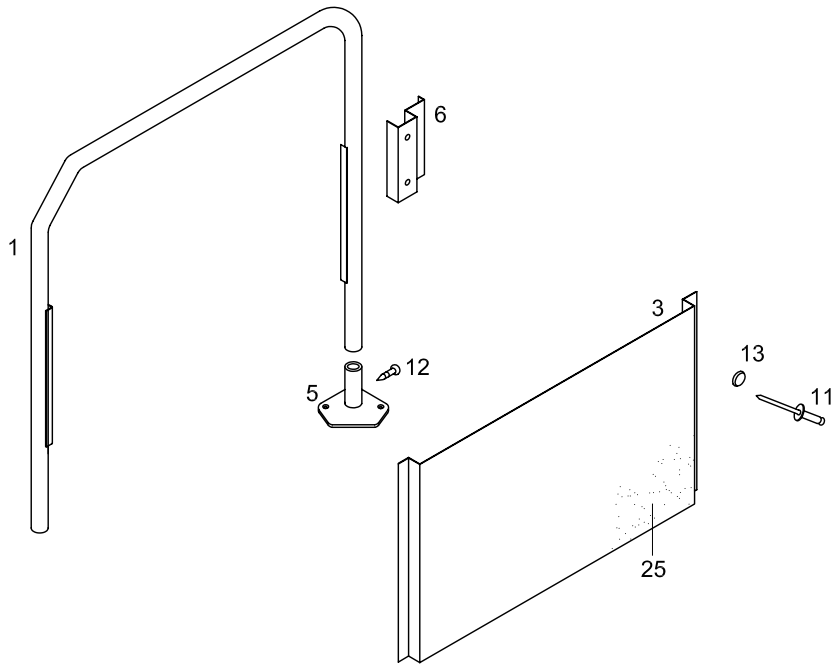

ORTA / ARKA
CENTER / REAR

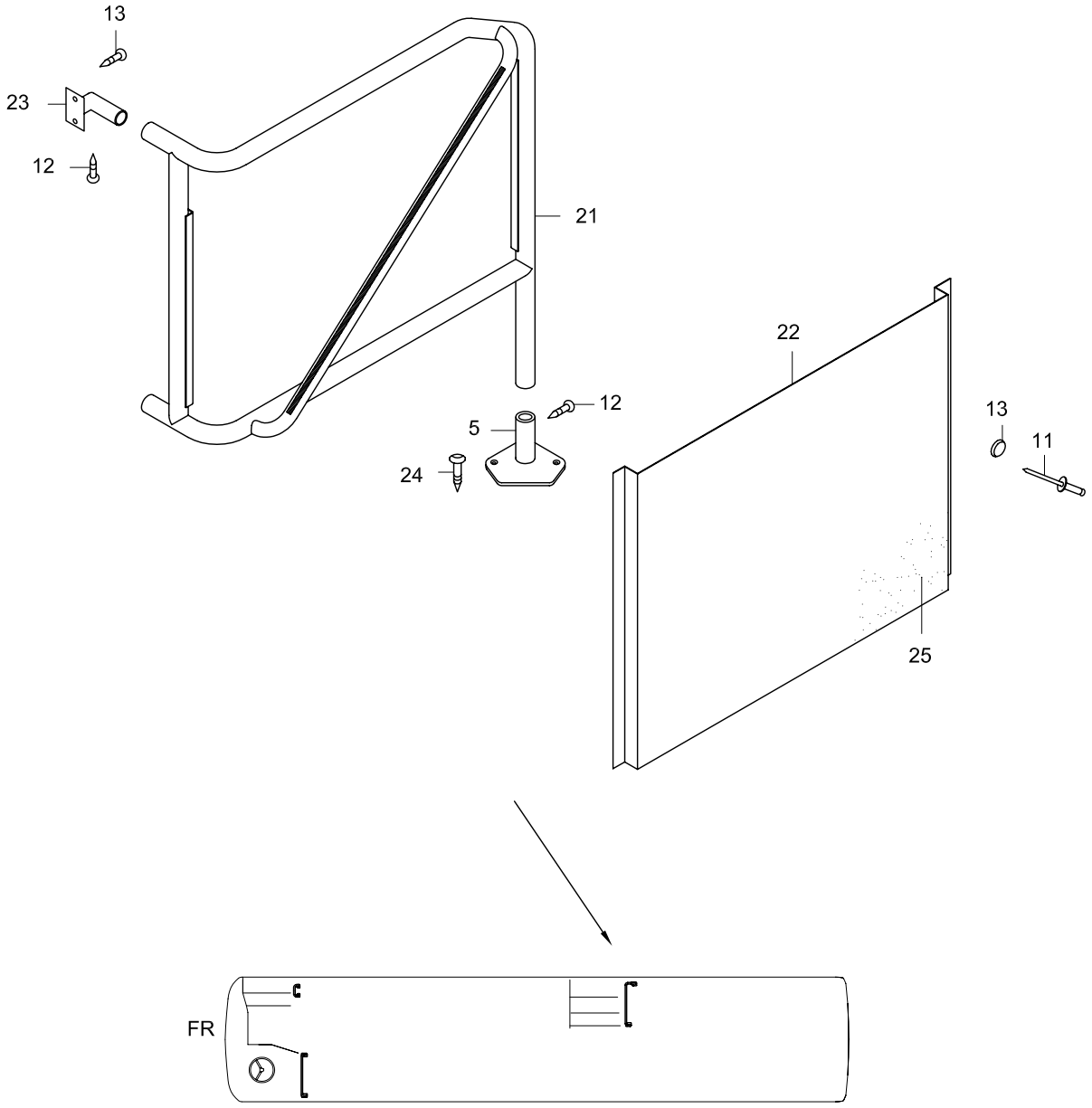

TEMSA	Bölmeler ve tırabzan - İsrail Partitions and parapet - Israel Trennungen und Geländer	Drw.no: 63272-96016-70Y Vehicle Model: **TB162W**	**30-061** RevDate: Page: 1

Pos	Part Number	Turkish	English	German	Qty	R/P	From	Up To	Original Number Supplier
1	63272-96026-12Y	BÖLME PANELİ BORUSU -SOL	PARTITION PIPE - LH		1		230704		
2	63272-96026-13Y	BÖLME PANELİ BORUSU ÖN SAĞ	PARTITION PIPE FRONT - RH		1		230704		
3	63272-90136-01Y	BÖLME PANELİ - SOL	PARTITION PANEL - LH		1		1		
4	63272-96136-03Y	BÖLME PANELİ - ÖN SAĞ	PARTITION PANEL -FR RH		1		230704		
5	63272-90018-10BY	BAĞLANTI	JOINT		3		1		
6	63272-90028-12Y	PLAKA	PLATE		1		1		
7	63272-90028-14Y	PLAKA	PLATE		1		1		
11	MA277895Y	KANCA	HOOK		AR		1		
12	TF200339Y	CIVATA	BOLT		AR		1		
13	TF457593Y	VİDA	SCREW		AR		1		
15	MF453033Y	VİDA	SCREW		AR		1		
21	63272-96016-01Y	BÖLME PANELİ BORUSU ARKA ORTA	PARTITION PIPE CENTER - REAR		1		230704		
22	63272-96136-09Y	BÖLME PANELİ ARKA ORTA	PARTITION PANEL CENTER - REAR		1		230704		
23	63272-90018-13BY	BRAKET	BRACKET		2		1		
24	TF201579Y	VİDA	SCREW		AR		1		
25	TES40451-03AY	YÜZEY KAPLAMASI	INTERNAL FABRIC		AR		1		
26	MF201692Y	VİDA	SCREW		AR		1		

TEMSA	Bölmeler ve tırabzan Partitions and parapet Trennungen und Geländer	Group No : 30-062 Draw. Num. : x Rev. Date : Page : 1
	Vehicle Model: TB162Y, TB163Y	

Option code: CAY_VAR

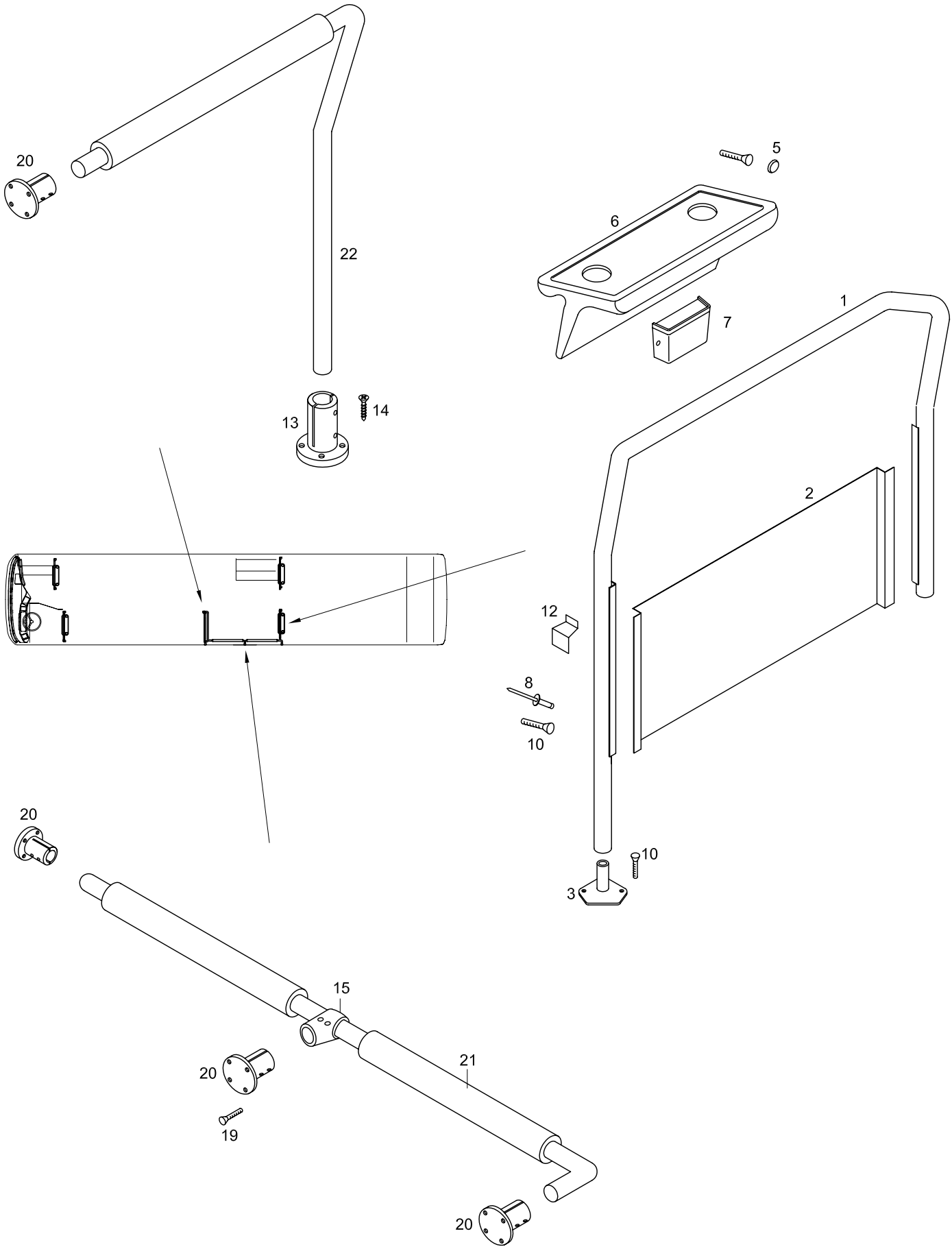

TEMSA	Bölmeler ve tırabzan Partitions and parapet Trennungen und Geländer	Drw.no: 63272-99116-70 Vehicle Model: **TB162Y** **TB163Y**	**30-062** RevDate: Page: 1

Pos	Part Number	Turkish	English	German	Qty	R/P	From	Up To	Original Number Supplier
1	63272-99026-12Y	BÖLME PANELİ BORUSU	PARTITION PIPE		1		010504		
2	63272-99036-01Y	BÖLME PANELİ	PARTITION PANEL		1		010504		
3	63272-90018-10BY	BAĞLANTI	JOINT		3		1		
5	63272-61650-05Y	TAPA	PLUG		5		1		
6	TM280240Y	TEPSİ	TRAY		1		1		
7	63285-30040-80Y	KÜLLÜK	ASH TRAY		1		1		
8	MA277895Y	KANCA	HOOK		AR		1		
9	TF200339Y	CIVATA	BOLT		AR		1		
10	TF457595Y	VİDA	SCREW		AR		1		
12	63272-99116-35Y	BRAKET	BRACKET		1		010504		
15	TM280164Y	BRAKET	BRACKET		1		010504		
19	MF201693Y	VİDA	SCREW		AR				
20	TM280165Y	BRAKET	BRACKET		5		010504		
21	63272-99126-24Y	BÖLME PANELİ BORUSU	PARTITION PIPE		1		010504		
22	63272-99116-34Y	BÖLME PANELİ BORUSU	PARTITION PIPE		1		010504		

TEMSA	Bölmeler ve tırabzan Partitions and parapet Trennungen und Geländer	Group No : 30-063 Draw. Num. : x Rev. Date : Page : 1
	Vehicle Model: TB162Y, TB163Y	

ÖN SAĞ
FRONT RH

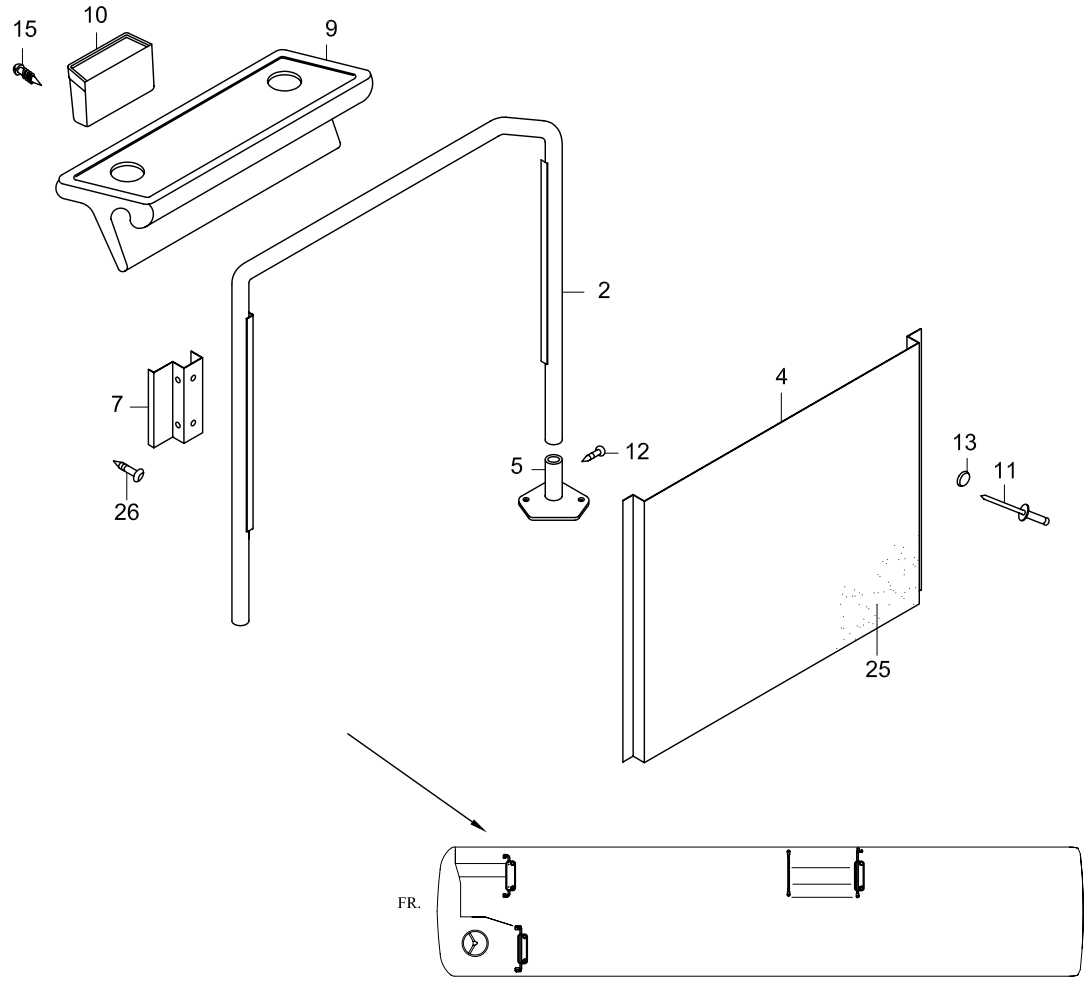

ÖN SOL
FRONT LH

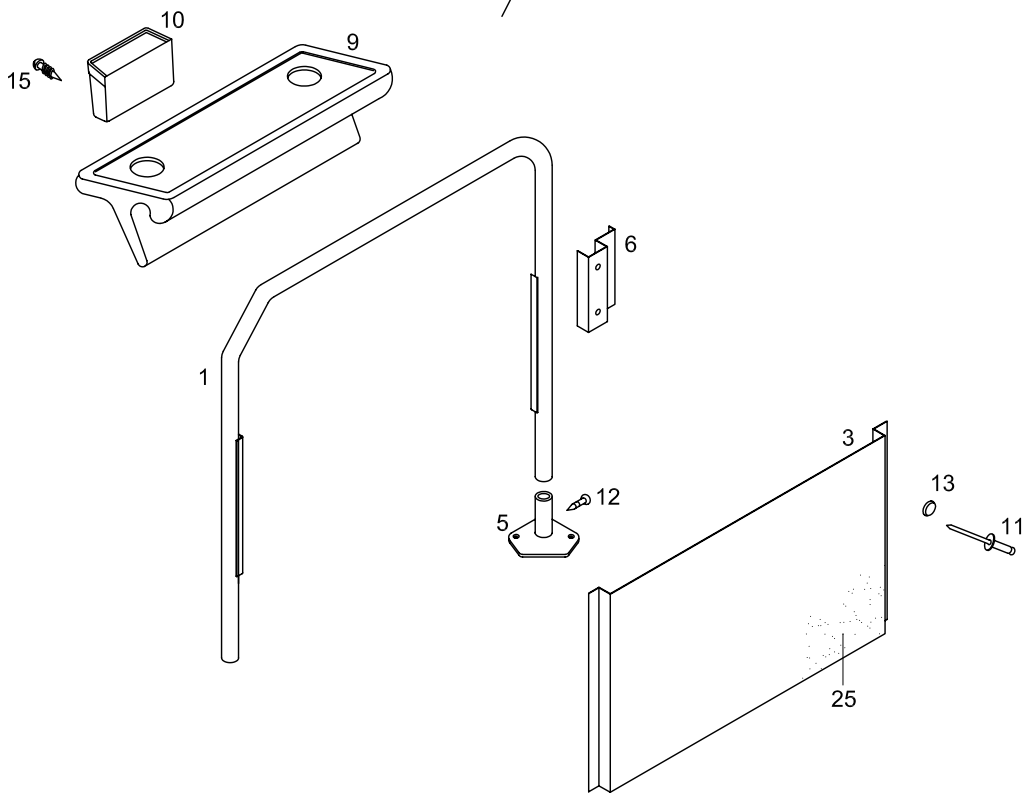

ORTA / ARKA
CENTER / REAR

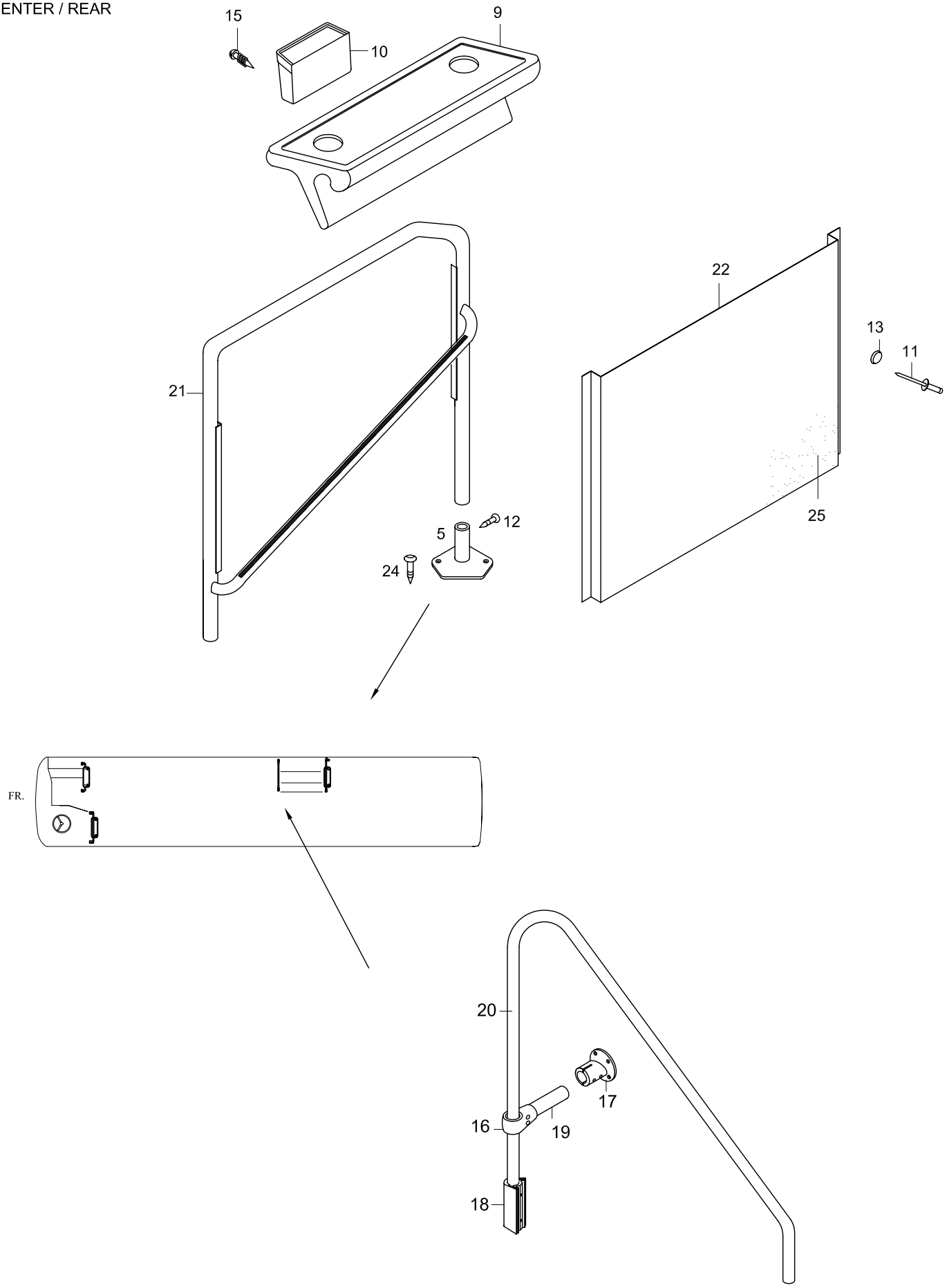

TEMSA	Bölmeler ve tırabzan Partitions and parapet Trennungen und Geländer	Drw.no: 63272-99000-70 Vehicle Model: **TB162Y** **TB163Y**	**30-063** RevDate: Page: 1

Pos	Part Number	Turkish	English	German	Qty	R/P	From	Up To	Original Number Supplier
1	63272-99026-12Y	BÖLME PANELİ BORUSU SOL	PARTITION PIPE - LH		1		010504		
2	63272-90026-13Y	BÖLME PANELİ BORUSU SAĞ	PARTITION PIPE -RH		1		1		
3	63272-99026-02Y	BÖLME PANELİ - SOL	PARTITION PANEL - LH		1		010504		
4	63272-90136-03Y	BÖLME PANELİ - SAĞ	PARTITION PANEL - RH		1		1		
5	63272-90018-10BY	BAĞLANTI	JOINT		3		1		
6	63272-90028-12Y	PLAKA	PLATE		1		1		
7	63272-90028-14Y	PLAKA	PLATE		1		1		
8	63272-94316-41Y	BAĞLANTI	JOINT		1		010504		
9	TM280240Y	TEPSİ	TRAY		3		1		
10	63285-30040-80Y	KÜLLÜK	ASH TRAY		3		1		
11	MA277895Y	KANCA	HOOK		AR		1		
12	TF200339Y	CIVATA	BOLT		AR		1		
13	TF457593Y	VİDA	SCREW		AR		1		
15	MF453033Y	VİDA	SCREW		AR		1		
16	TM280164Y	BRAKET	BRACKET		1		010504		
17	TM280165Y	BRAKET	BRACKET		1		010504		
18	63272-94016-02Y	BRAKET	BRACKET		1		010504		
19	63272-99000-14Y	BORU	PIPE		1		010504		
20	63272-99000-06Y	TIRABZAN	PARAPET		1		010504		
21	63272-99036-13Y	BÖLME PANELİ BORUSU ARKA ORTA	PARTITION PIPE CENTER - REAR		1		010504		
22	63272-90136-03Y	BÖLME PANELİ ARKA ORTA	PARTITION PANEL CENTER - REAR		1		1		
23	63272-90018-13BY	BRAKET	BRACKET		2		1		
24	TF201579Y	VİDA	SCREW		AR		1		
25	TES40451-03Y	YÜZEY KAPLAMASI - GRİ	INTERNAL FABRIC - GRAY		AR		1		
26	MF201692Y	VİDA	SCREW		AR		1		

TEMSA	Bölmeler ve tırabzan Partitions and parapet Trennungen und Geländer	Group No : 30-064 Draw. Num. : x Rev. Date : Page : 1
	Vehicle Model: TB162Z, TB163Z,	

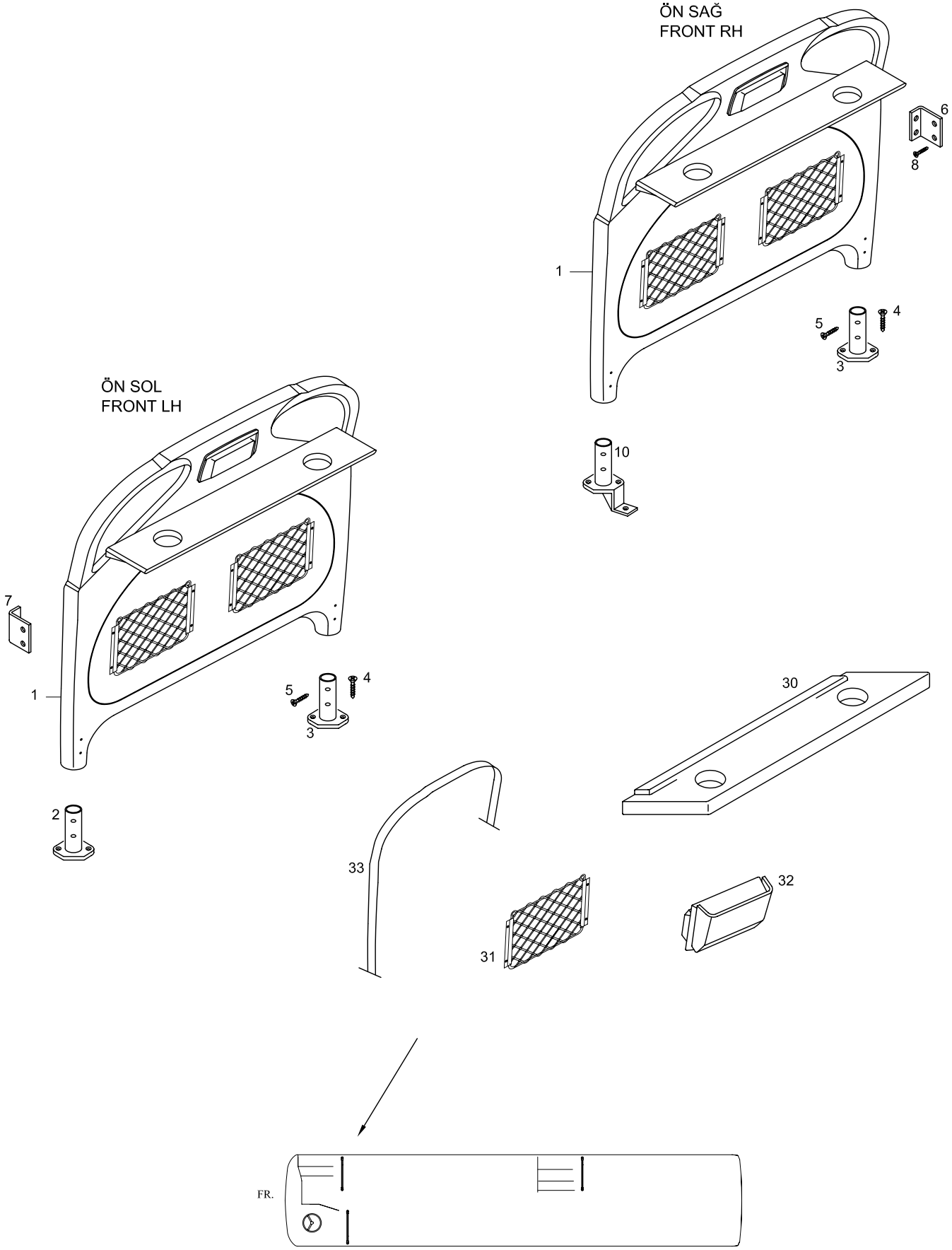

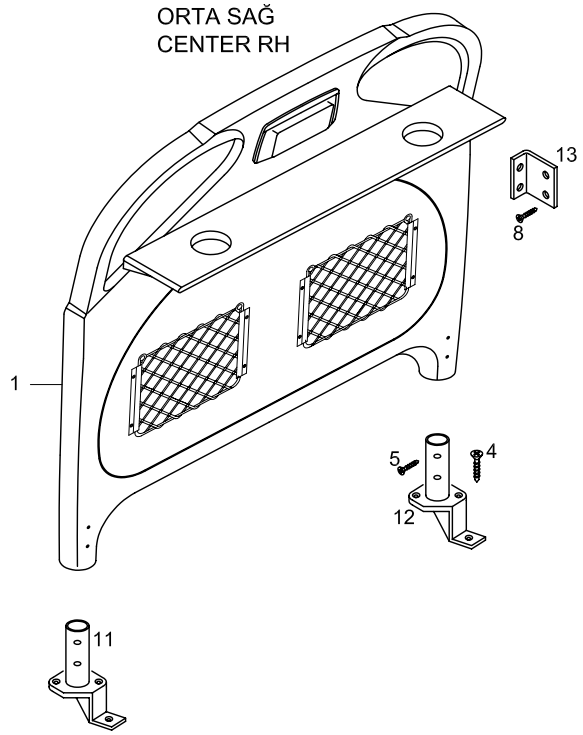
ORTA SAĞ
CENTER RH
13
8
1
5
4
12
11

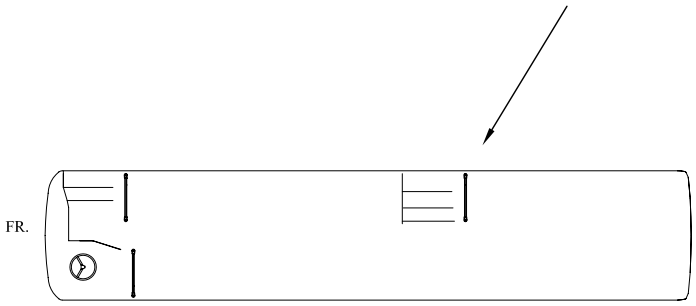
FR.

TEMSA	Bölmeler Partitions Trennungen	Drw.no: 63272-80016-70 / 80026-70 Vehicle Model: **TB162Z** **TB163Z**	**30-064** RevDate: Page: 1

Pos	Part Number	Turkish	English	German	Qty	R/P	From	Up To	Original Number Supplier
1	9940400002	ÖN BÖLME	FRONT PARTITION		3		020904		ELLAMP
2	TU280113Y	BRAKET	BRACKET		1		020904		
3	TU280114Y	BRAKET	BRACKET		2		020904		
4	TF201579Y	VİDA M6*40	SCREW		AR		020904		
5	MF205049Y	VİDA M6*20	SCREW		AR		020904		
6	63272-80016-11BY	BRAKET SAĞ	BRACKET RH		1		020904		
7	63272-80016-12Y	BRAKET SOL	BRACKET LH		1		020904		
8	MF201572Y	VİDA M6x18-5,6	SCREW		AR		020904		
10	63272-80016-10Y	BRAKET	BRACKET		1		020904		
11	63272-80026-12Y	BRAKET SAĞ	BRACKET RH		1		020904		
12	63272-80026-13Y	BRAKET SOL	BRACKET LH		1		020904		
13	63272-80026-08AY	BRAKET	BRACKET		1		020904		
30	9940482337X	SERVİS TABLASI	SERVICE TABLE		3		020904		ELLAMP
31	9930100004X	FİLE	DOCUMENT NET		6		020904		ELLAMP
32	9941000000X	KÜLLÜK	ASHTRAY		3		020904		ELLAMP
33	1490060035-002X	ŞERİT BANT	FLUORESCENT STRIPE		3		020904		ELLAMP

TEMSA	Bölme - İsrail Partition - Israel Trennungen	Group No : 30-065 Draw. Num. : x Rev. Date :
	Vehicle Model: TB162W	Page : 1

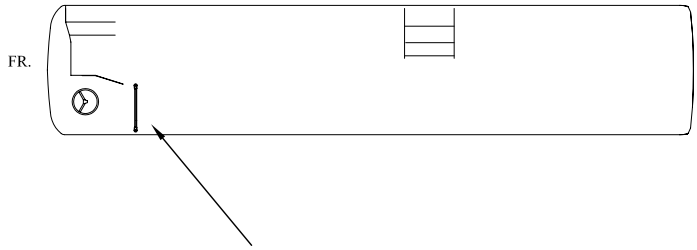

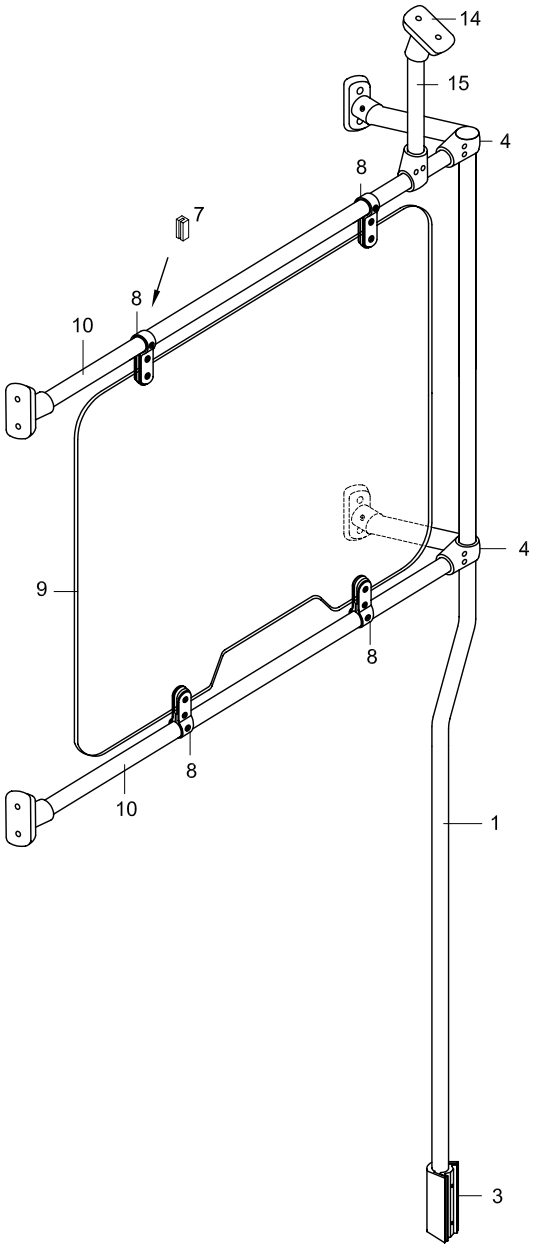

TEMSA	Bölme - İsrail Partition - Israel Trennungen	Drw.no: 63272-96016-95 Vehicle Model: **TB162W**	**30-065** RevDate: Page: 1

Pos	Part Number	Turkish	English	German	Qty	R/P	From	Up To	Original Number Supplier
1	63272-94316-05Y	BORU	PIPE		1		020904		
3	63272-94016-02Y	BRAKET	BRACKET		1		020904		
4	TM280164Y	BRAKET	BRACKET		3		020904		
7	TM280168Y	LASTİK	RUBBER		8		020904		
8	TM280166Y	BRAKET	BRACKET		4		020904		
9	63111-90016-29Y	FLEXIGLAS	FLEXIGLAS		1		020904		
10	63272-94356-25Y	BORU	PIPE		2		020904		
14	63111-96016-25Y	BRAKET	BRACKET		1		020904		
15	63111-96016-31Y	BORU	PIPE		1		020904		

TEMSA	Güneşlik, iç ayna, saat + termometre Sun visor, inside mirror, clock + thermometer Sonnenblende, Innenspiegel, Uhr, Thermometer	Group No : 30-070 Draw. Num. : x Rev. Date : Page : 1
	Vehicle Model: TB162W, TB162Z, TB162X, TB162Y, TB163W, TB163Z, TB163X, TB163Y	

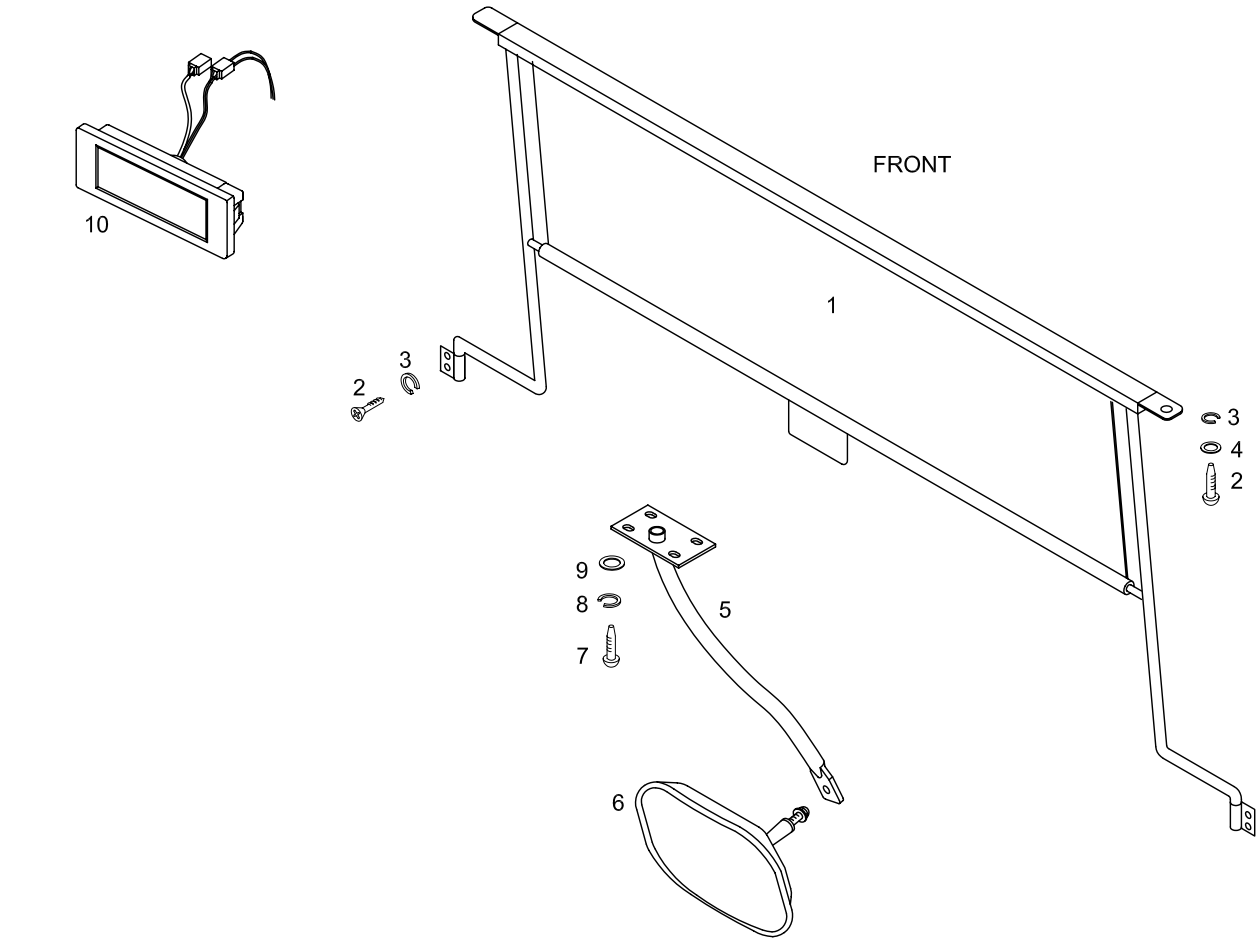

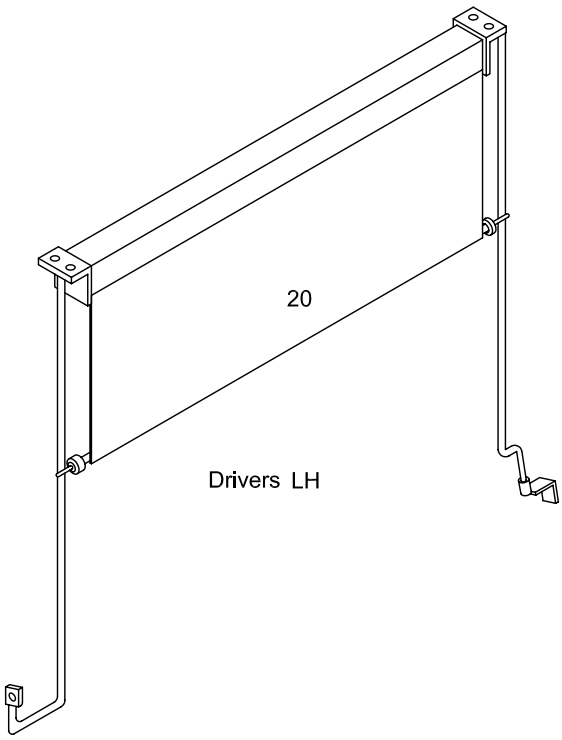

TEMSA	Güneşlik, iç ayna, saat+termometre Sun visor, inside mirror, clock + thermometer Sonnenblende, Innenspiegel, Uhr, Thermometer	Drw.no: 63355-80016-70 Vehicle Model: **TB162W, TB162Z, TB162X, TB162Y** **TB163W, TB163Z, TB163X, TB163Y**	**30-070** RevDate: Page: 1

Pos	Part Number	Turkish	English	German	Qty	R/P	From	Up To	Original Number Supplier
1	63355-70126-02Y	GÜNEŞLİK - ÖN	SUN VISOR - FRONT		1		1		BSUN_VISOR01
1	63355-70126-03Y	GÜNEŞLİK - ÖN	SUN VISOR - FRONT		1		280404		BSUN_VISOR02
1	63355-98126-01Y	GÜNEŞLİK - ÖN	SUN VISOR - FRONT		1		280404		BSUN_VISOR04
2	MC395401Y	VİDA	SCREW TAPPING		AR		1		ST 4.2*32 C H
3	MF450402Y	RONDELA	WASHER SPRING		AR		1		4
4	MF450002Y	PUL	WASHER PLAIN		AR		1		A 4.3
5	63355-94116-01Y	AYNA BRAKETİ	BRACKET, MIRROR		1		1		
6	TC319480Y	İÇ AYNA KOMPLESİ	INSIDE REAR VIEW MIRROR		1		1		
7	MF200079Y	VİDA	SCREW MACHINE		AR		1		6*20
8	MF450404Y	RONDELA	WASHER SPRING		AR		1		A6
9	MF450004Y	PUL	WASHER PLAIN		AR		1		A6.4
10	4991045	SAAT+TERMOMETRE	CLOCK + THERMOMETER		1		1	280404	ELLAMP
10	4991054	SAAT+TERMOMETRE	CLOCK + THERMOMETER		1		280404		ELLAMP
20	63355-94000-01Y	GÜNEŞLİK - SÜRÜCÜ	SUN VISOR - DRIVERS		1		1		

TEMSA	Hava kanalı iç paneli Panel inner air duct	Group No : 30-080 Draw. Num. : x Rev. Date :	
	Vehicle Model: TB162W, TB163W,	Page : 1	

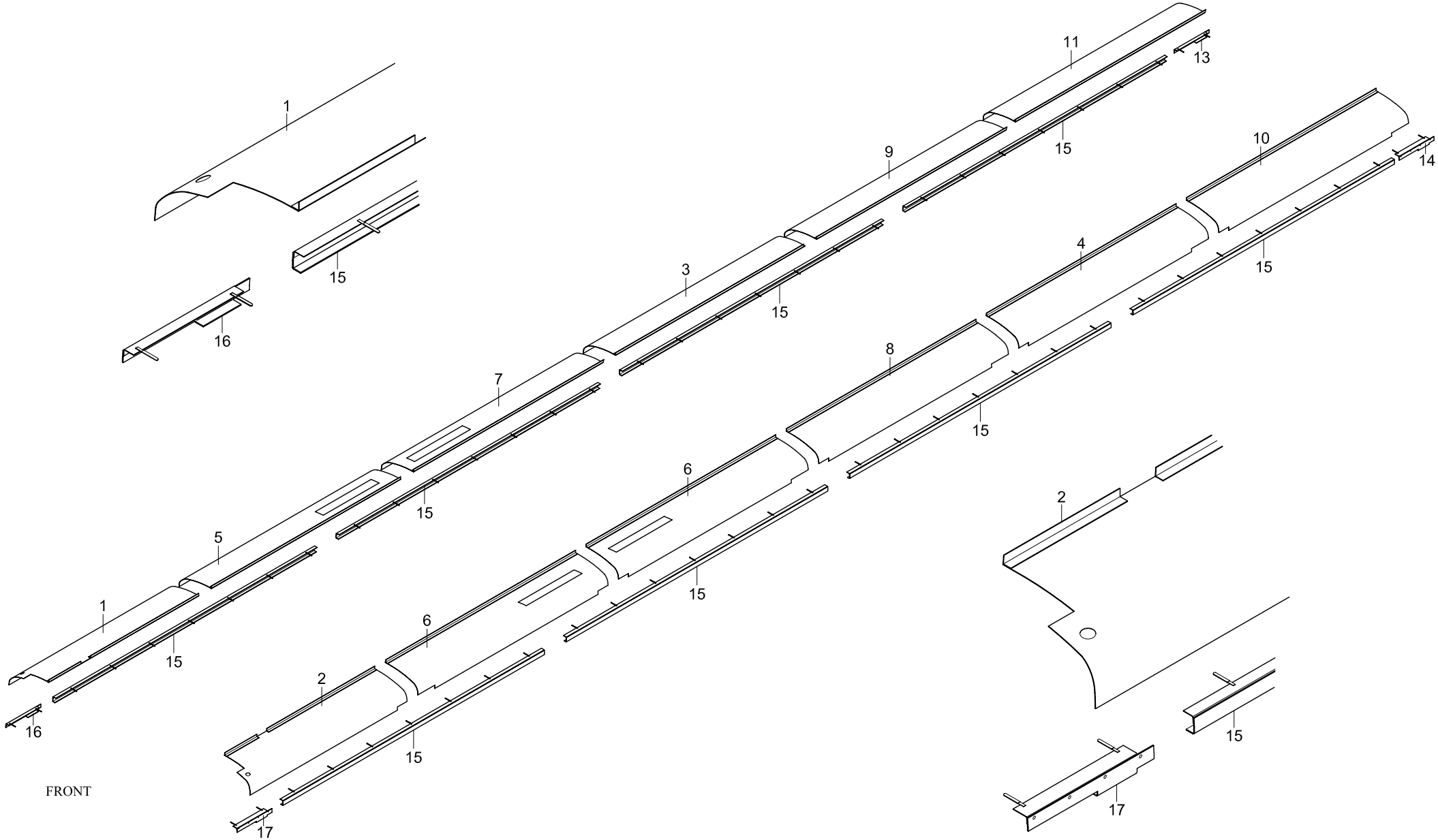

TEMSA	Hava kanalı iç paneli Panel inner, air duct	Drw.no: 62006-96020-70 Vehicle Model: **TB162W** **TB163W**	**30-080** RevDate: Page: 1

Pos	Part Number	Turkish	English	German	Qty	R/P	From	Up To	Original Number Supplier
1	62006-96010-01Y	PANEL	PANEL		1		1		
2	62006-96010-02Y	PANEL	PANEL		1		1		
3	62006-96010-03Y	PANEL	PANEL		1		1		
4	62006-96010-04Y	PANEL	PANEL		1		1		
5	62006-96010-05Y	PANEL	PANEL		1		1		
6	62006-96010-06Y	PANEL	PANEL		2		1		
7	62006-96010-07Y	PANEL	PANEL		1		1		
8	62006-96010-08Y	PANEL	PANEL		1		1		
9	62006-96010-09Y	PANEL	PANEL		1		1		
10	62006-96010-10Y	PANEL	PANEL		1		1		
11	62006-96010-11Y	PANEL	PANEL		1		1		
12	62006-96010-12Y	PANEL	PANEL		1		1		
13	62006-96010-13Y	KABLO BAĞLAMA PANELİ	REINFORCEMENT		1		1		
14	62006-96010-14Y	KABLO BAĞLAMA PANELİ	REINFORCEMENT		1		1		
15	62006-80120-72Y	KABLO BAĞLAMA PANELİ	REINFORCEMENT		8		1		
16	62006-80120-70Y	KABLO BAĞLAMA PANELİ	REINFORCEMENT		1		1		
17	62006-80120-71Y	KABLO BAĞLAMA PANELİ	REINFORCEMENT		1		1		

TEMSA	Hava kanalı iç paneli Panel inner air duct	Group No : 30-081 Draw. Num. : x Rev. Date :	
	Vehicle Model: TB162X, TB163X,	Page : 1	

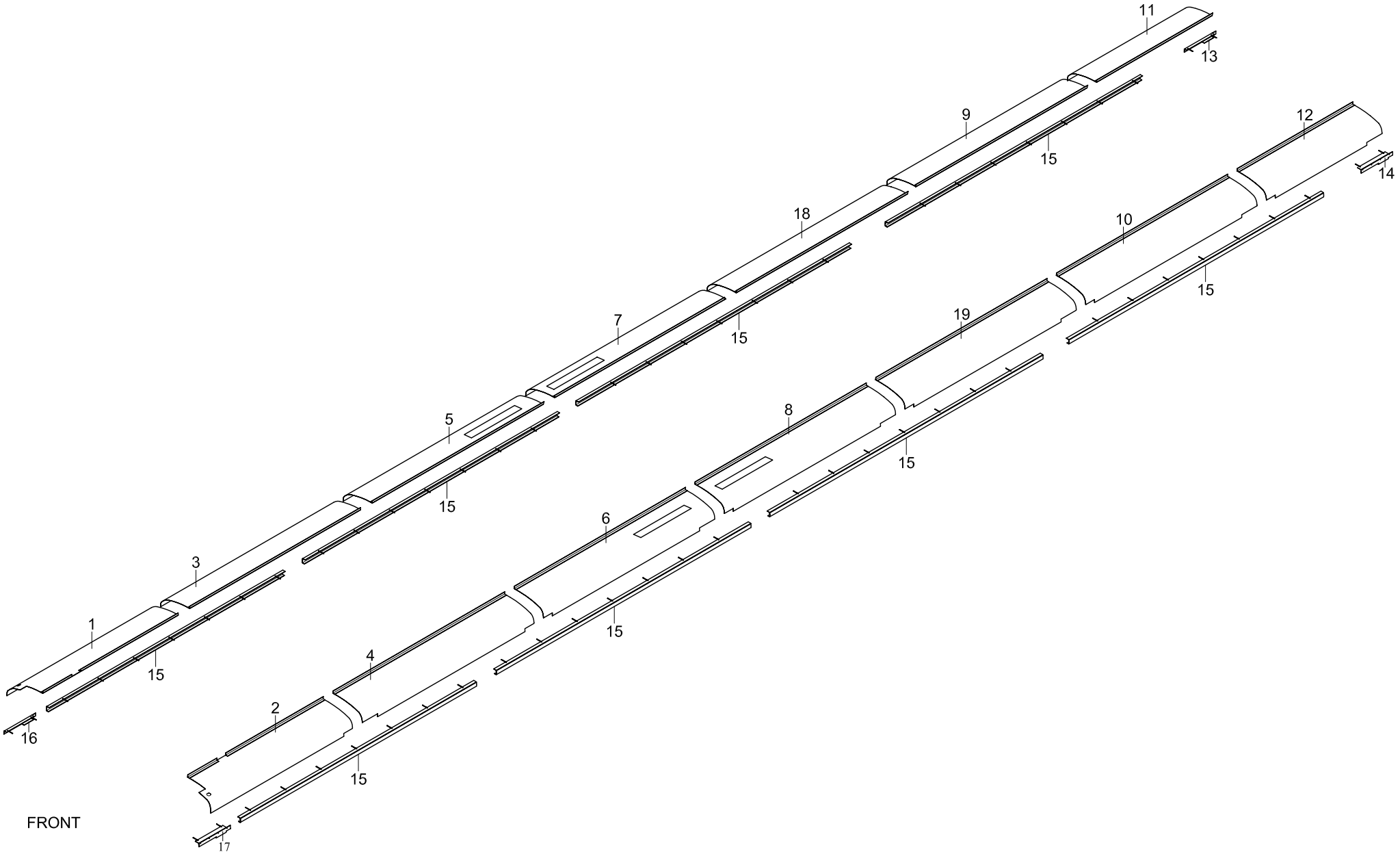

TEMSA	Hava kanalı iç paneli Panel inner, air duct	Drw.no: 62006-98010-70Y Vehicle Model: **TB162X** **TB163X**	**30-081** RevDate: Page: 1

Pos	Part Number	Turkish	English	German	Qty	R/P	From	Up To	Original Number Supplier
1	62006-98010-01Y	PANEL	PANEL		1		1		
2	62006-96010-02Y	PANEL	PANEL		1		1		
3	62006-98010-03Y	PANEL	PANEL		1		1		
4	62006-99010-20Y	PANEL	PANEL		1		1		
5	62006-99010-21Y	PANEL	PANEL		1		1		
6	62006-96010-06Y	PANEL	PANEL		1		1		
7	62006-98010-07Y	PANEL	PANEL		1		1		
8	62006-98010-08Y	PANEL	PANEL		1		1		
9	62006-99010-09Y	PANEL	PANEL		1		1		
10	62006-99010-10Y	PANEL	PANEL		1		1		
11	62006-97010-11Y	PANEL	PANEL		1		1		
12	62006-97010-12Y	PANEL	PANEL		1		1		
13	62006-96010-13Y	KABLO BAĞLAMA PANELİ	REINFORCEMENT		1		1		
14	62006-96010-14Y	KABLO BAĞLAMA PANELİ	REINFORCEMENT		1		1		
15	62006-80120-72Y	KABLO BAĞLAMA PANELİ	REINFORCEMENT		8		1		
16	62006-80120-70Y	KABLO BAĞLAMA PANELİ	REINFORCEMENT		1		1		
17	62006-80120-71Y	KABLO BAĞLAMA PANELİ	REINFORCEMENT		1		1		
18	62006-99010-18Y	PANEL	PANEL		1		1		
19	62006-99010-19Y	PANEL	PANEL		1		1		

TEMSA	Hava kanalı iç paneli Panel inner air duct	Group No : 30-082 Draw. Num. : x Rev. Date : Page : 1
	Vehicle Model: TB162Z, TB163Z,	

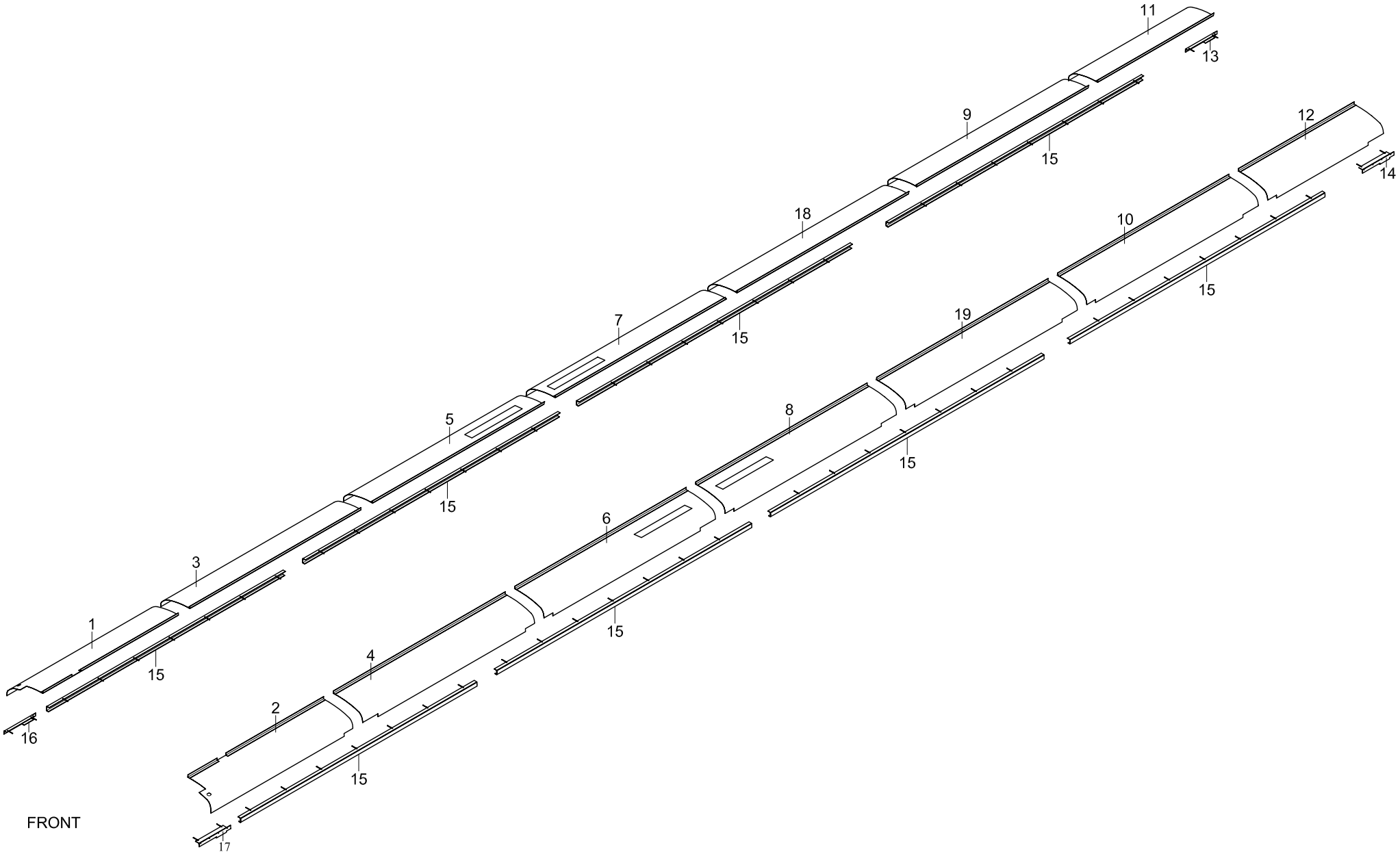

TEMSA	Hava kanalı iç paneli Panel inner, air duct	Drw.no: 62006-97010-70 Vehicle Model: **TB162Z** **TB163Z**	**30-082** RevDate: Page: 1

Pos	Part Number	Turkish	English	German	Qty	R/P	From	Up To	Original Number Supplier
1	62006-97010-01Y	PANEL	PANEL		1		1		
2	62006-97010-02Y	PANEL	PANEL		1		1		
3	62006-97010-03Y	PANEL	PANEL		1		1		
4	62006-97010-04Y	PANEL	PANEL		1		1		
5	62006-97010-05Y	PANEL	PANEL		1		1		
6	62006-97010-06Y	PANEL	PANEL		1		1		
7	62006-97010-07Y	PANEL	PANEL		1		1		
8	62006-97010-08Y	PANEL	PANEL		1		1		
9	62006-97010-09Y	PANEL	PANEL		1		1		
10	62006-97010-10Y	PANEL	PANEL		1		1		
11	62006-97010-11Y	PANEL	PANEL		1		1		
12	62006-97010-12Y	PANEL	PANEL		1		1		
13	62006-97010-13Y	KABLO BAĞLAMA PANELİ	REINFORCEMENT		1		1		
14	62006-97010-14Y	KABLO BAĞLAMA PANELİ	REINFORCEMENT		1		1		
15	62006-80120-72Y	KABLO BAĞLAMA PANELİ	REINFORCEMENT		8		1		
16	62006-80120-70Y	KABLO BAĞLAMA PANELİ	REINFORCEMENT		1		1		
17	62006-80120-71Y	KABLO BAĞLAMA PANELİ	REINFORCEMENT		1		1		
18	62006-80120-18Y	PANEL	PANEL		1		1		
19	62006-80120-19Y	PANEL	PANEL		1		1		

TEMSA	Hava kanalı iç paneli Panel inner air duct	Group No : 30-083 Draw. Num. : x Rev. Date : Page : 1
	Vehicle Model: TB162Y, TB163Y	

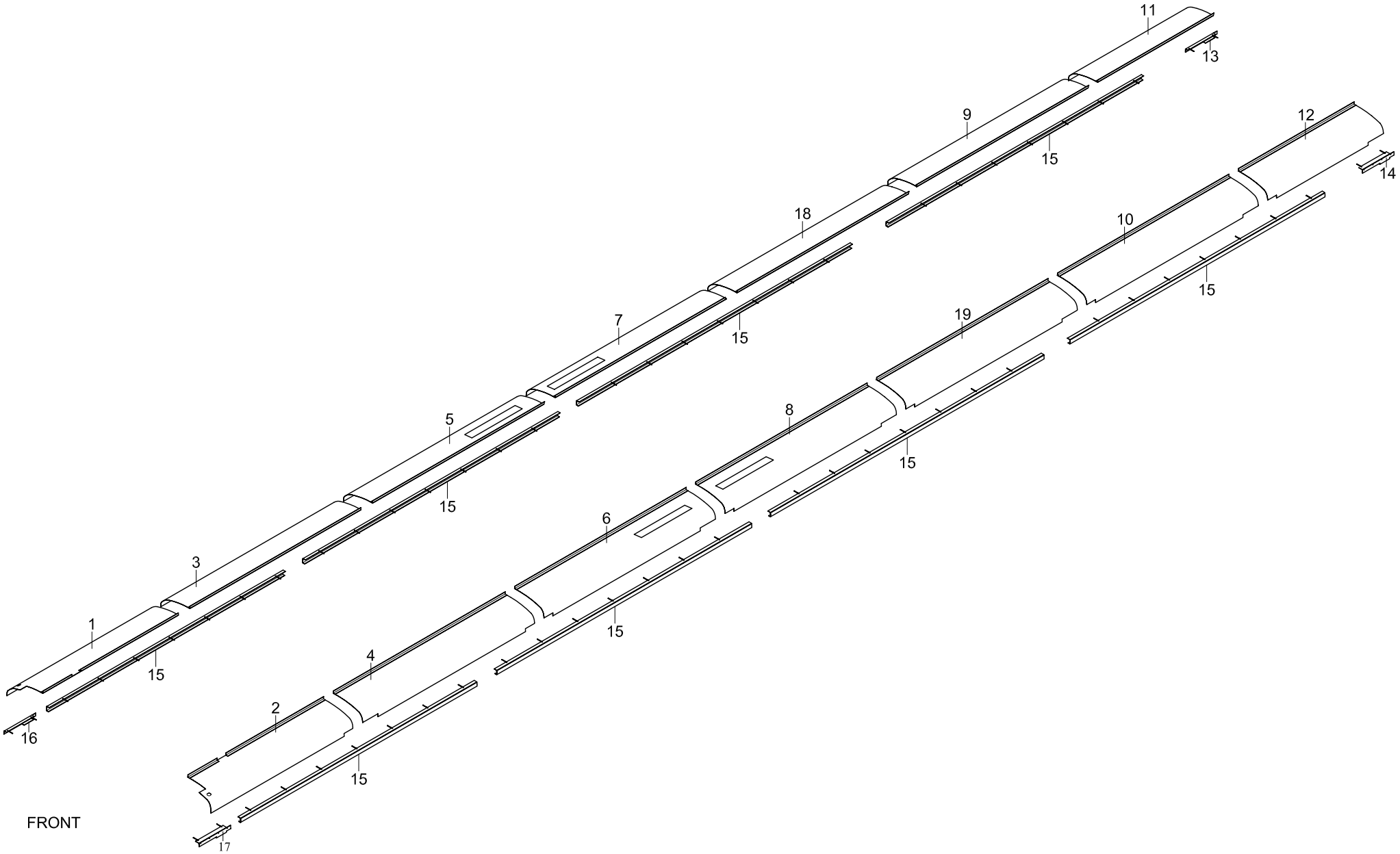

TEMSA	Hava kanalı iç paneli Panel inner, air duct	Drw.no: 62006-99010-70 Vehicle Model: **TB162Y** **TB163Y**	**30-083** RevDate: Page: 1

Pos	Part Number	Turkish	English	German	Qty	R/P	From	Up To	Original Number Supplier
1	62006-97010-01Y	PANEL	PANEL		1		1		
2	62006-97010-02Y	PANEL	PANEL		1		1		
3	62006-97010-03Y	PANEL	PANEL		1		1		
4	62006-99010-20Y	PANEL	PANEL		1		1		
5	62006-99010-21Y	PANEL	PANEL		1		1		
6	62006-99010-06Y	PANEL	PANEL		1		1		
7	62006-99010-07Y	PANEL	PANEL		1		1		
8	62006-99010-08Y	PANEL	PANEL		1		1		
9	62006-99010-09Y	PANEL	PANEL		1		1		
10	62006-99010-10Y	PANEL	PANEL		1		1		
11	62006-97010-11Y	PANEL	PANEL		1		1		
12	62006-97010-12Y	PANEL	PANEL		1		1		
13	62006-96010-15Y	KABLO BAĞLAMA PANELİ	REINFORCEMENT		1		1		
14	62006-96010-16Y	KABLO BAĞLAMA PANELİ	REINFORCEMENT		1		1		
15	62006-80120-72Y	KABLO BAĞLAMA PANELİ	REINFORCEMENT		8		1		
16	62006-80120-70Y	KABLO BAĞLAMA PANELİ	REINFORCEMENT		1		1		
17	62006-80120-71Y	KABLO BAĞLAMA PANELİ	REINFORCEMENT		1		1		
18	62006-99010-18Y	PANEL	PANEL		1		1		
19	62006-99010-19Y	PANEL	PANEL		1		1		

TEMSA	Perde Curtain	Group No : 30-090 Draw. Num. : x Rev. Date : Page : 1
	Vehicle Model: TB162W, TB163W,	

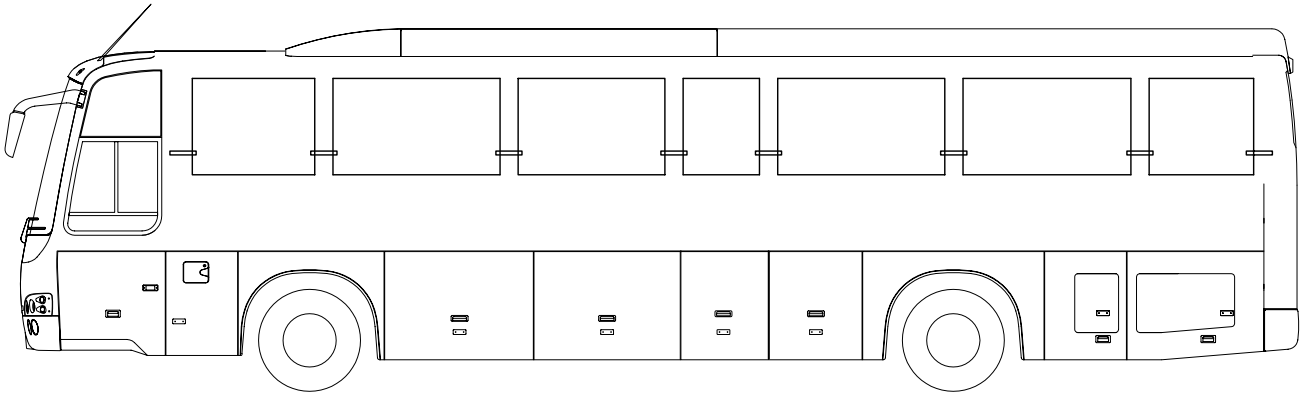

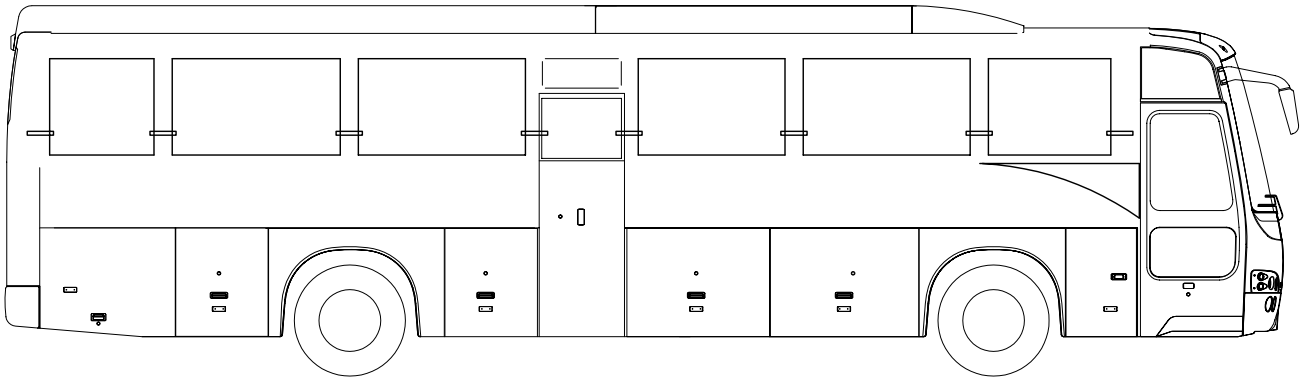

ARKA İÇ GÖRÜNÜŞ
INSIDE REAR

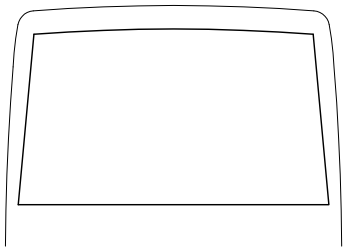

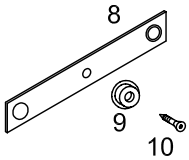

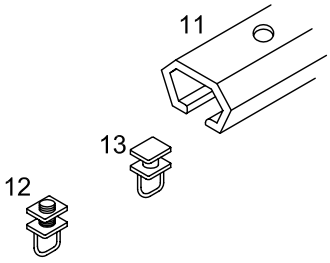

ARKA PERDE
REAR CURTAIN

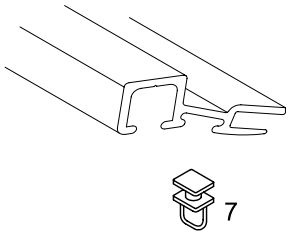

YAN PERDE
SIDE CURTAIN

TEMSA	Perde Curtain	Drw.no: 63304-96017-70Y Vehicle Model: **TB162W** **TB163W**	**30-090** RevDate: Page: 1

Pos	Part Number	Turkish	English	German	Qty	R/P	From	Up To	Original Number Supplier
*	63304-96027-80AY	PERDE SETİ	CURTAIN SET		1		1		
7	63304-90030-01Y	PERDE KANCASI	CURTAIN HANGER		AR		1		
8	-	BAND	BAND		AR		1		
9	MA277895Y	KANCA	HOOK		AR		1		
10	MF457235Y	VİDA	SCREW		AR		1		
11	TA249291-04Y	ARKA PERDE RAYI	RAIL REAR CURTAIN		1		1		
12	TA277897-01Y	STOPLAYICI	STOPPER		2		1		
13	63304-40030-02Y	PERDE KANCASI	CURTAIN HANGER		AR		1		

TEMSA	Perde Curtain	Group No : 30-091 Draw. Num. : x Rev. Date : Page : 1
	Vehicle Model: TB162Z, TB163Z,	

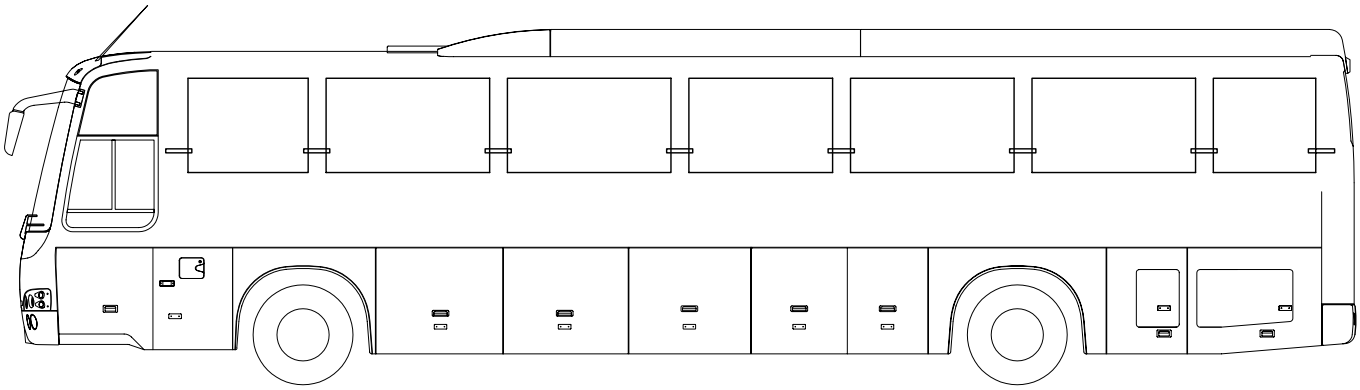

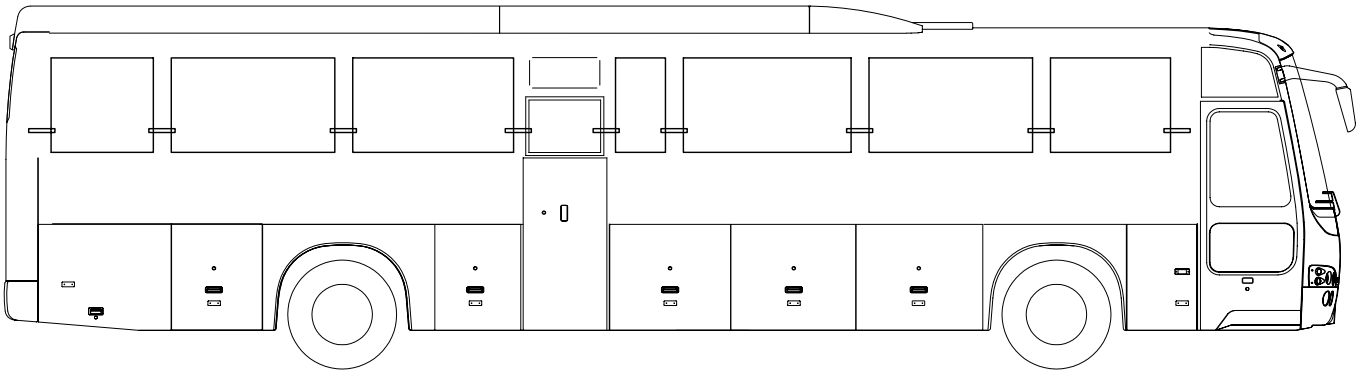

ARKA İÇ GÖRÜNÜŞ
INSIDE REAR

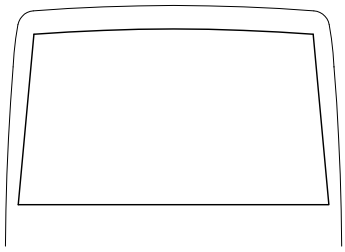

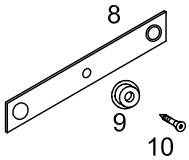

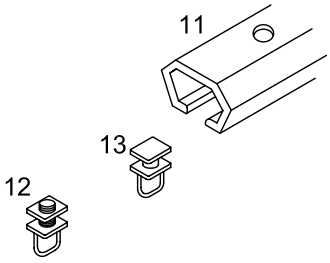

ARKA PERDE
REAR CURTAIN

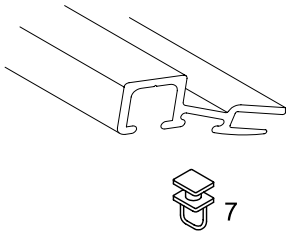

YAN PERDE
SIDE CURTAIN

TEMSA	Perde Curtain	Drw.no: 63304-97017-70Y Vehicle Model: **TB162Z** **TB163Z**	**30-091** RevDate: Page: 1

Pos	Part Number	Turkish	English	German	Qty	R/P	From	Up To	Original Number Supplier
*	63304-97027-80Y	PERDE SETİ	CURTAIN SET		1		1		
7	63304-90030-01Y	PERDE KANCASI	CURTAIN HANGER		AR		1		
8	-	BAND	BAND		AR		1		
9	MA277895Y	KANCA	HOOK		AR		1		
10	MF457235Y	VİDA	SCREW		AR		1		
11	TA249291-04Y	ARKA PERDE RAYI	RAIL REAR CURTAIN		1		1		
12	TA277897-01Y	STOPLAYICI	STOPPER		2		1		
13	63304-40030-02Y	PERDE KANCASI	CURTAIN HANGER		AR		1		

TEMSA	Perde Curtain	Group No : 30-092 Draw. Num. : x Rev. Date : Page : 1
	Vehicle Model: TB162X, TB163X,	

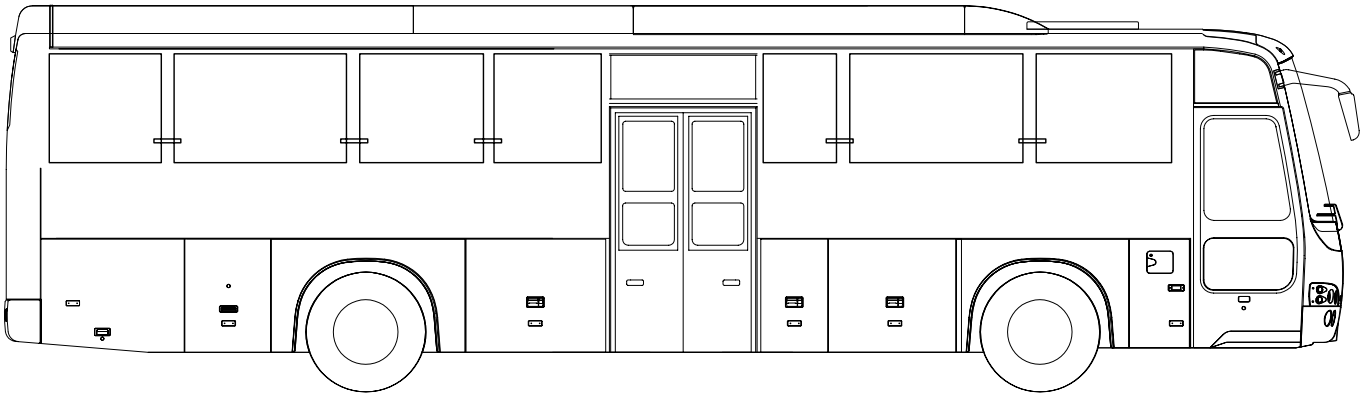

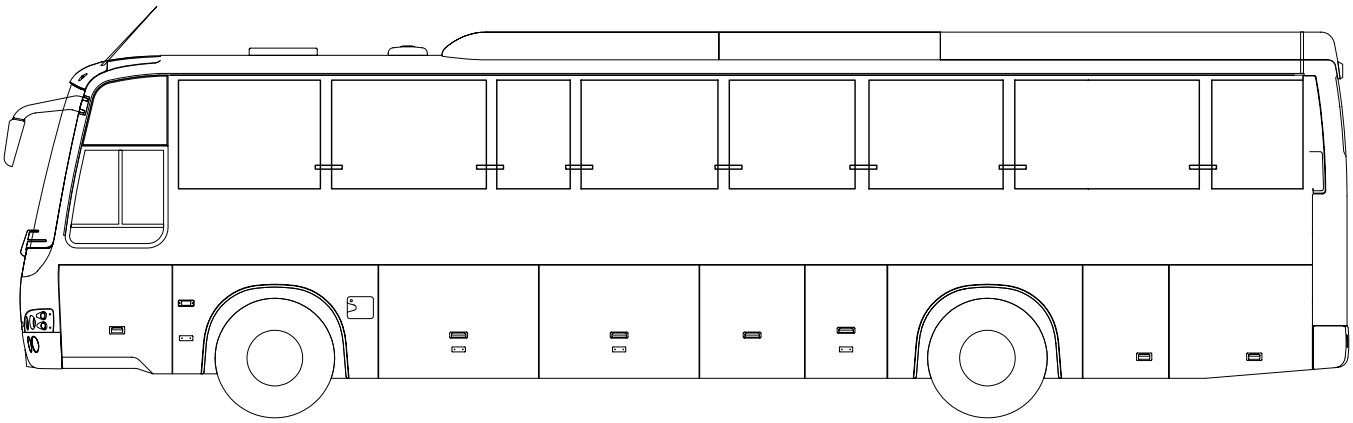

ARKA İÇ GÖRÜNÜŞ
INSIDE REAR

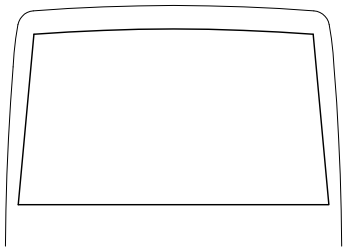

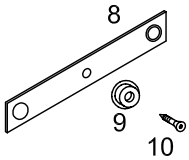

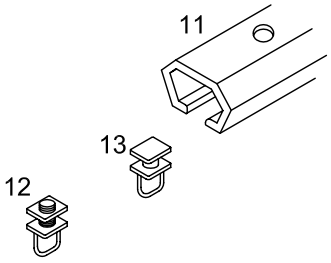

ARKA PERDE
REAR CURTAIN

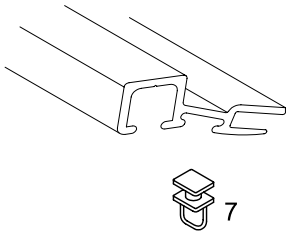

YAN PERDE
SIDE CURTAIN

TEMSA	Perde Curtain	Drw.no: 63304-98017-70Y Vehicle Model: **TB162X** **TB163X**	**30-092** RevDate: Page: 1

Pos	Part Number	Turkish	English	German	Qty	R/P	From	Up To	Original Number Supplier
*	63304-98027-80Y	PERDE SETİ	CURTAIN SET		1		1		
7	63304-90030-01Y	PERDE KANCASI	CURTAIN HANGER		AR		1		
8	-	BAND	BAND		AR		1		
9	MA277895Y	KANCA	HOOK		AR		1		
10	MF457235Y	VİDA	SCREW		AR		1		
11	TA249291-04Y	ARKA PERDE RAYI	RAIL REAR CURTAIN		1		1		
12	TA277897-01Y	STOPLAYICI	STOPPER		2		1		
13	63304-40030-02Y	PERDE KANCASI	CURTAIN HANGER		AR		1		

TEMSA	Perde Curtain	Group No : 30-093 Draw. Num. : x Rev. Date : Page : 1
	Vehicle Model: TB162Y, TB163Y	

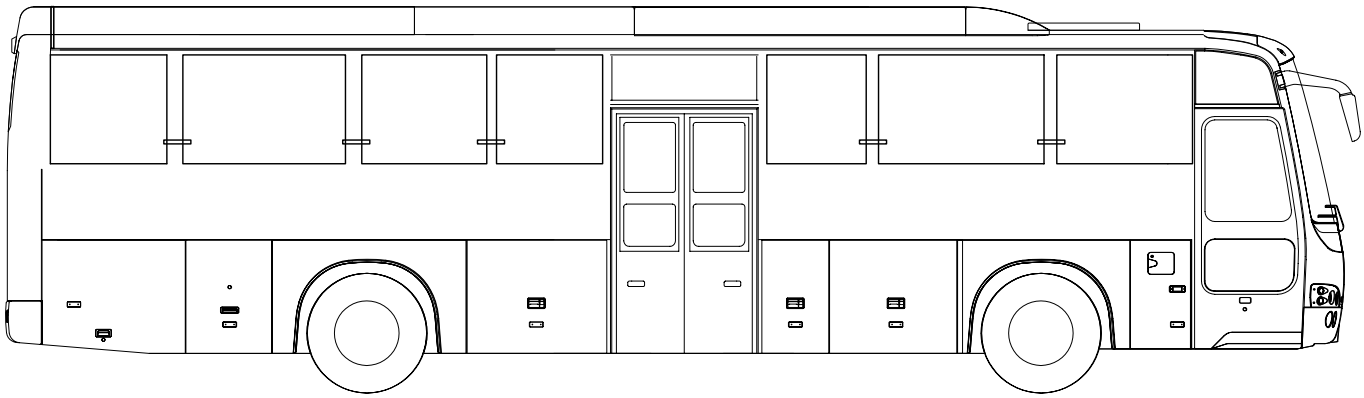

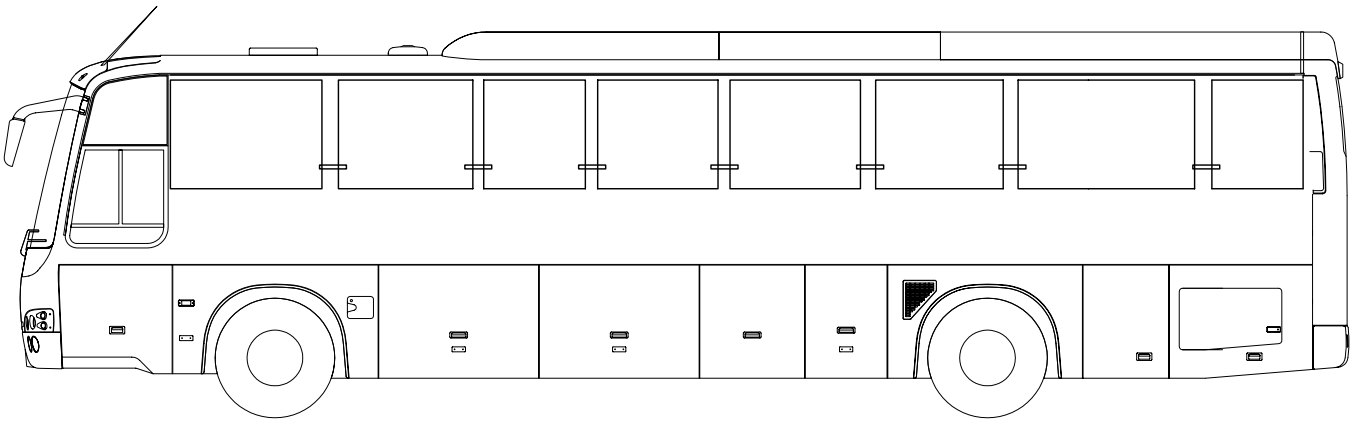

ARKA İÇ GÖRÜNÜŞ
INSIDE REAR

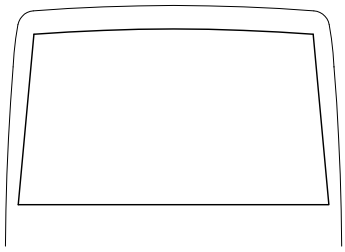

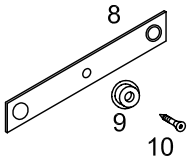

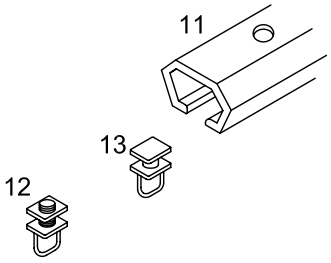

ARKA PERDE
REAR CURTAIN

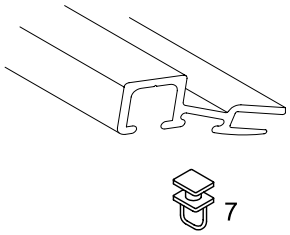

YAN PERDE
SIDE CURTAIN

TEMSA	Perde Curtain	Drw.no: 63304-99017-70Y Vehicle Model: **TB162Y** **TB163Y**	**30-093** RevDate: Page: 1

Pos	Part Number	Turkish	English	German	Qty	R/P	From	Up To	Original Number Supplier
*	63304-99027-80Y	PERDE SETİ	CURTAIN SET		1		1		
7	63304-90030-01Y	PERDE KANCASI	CURTAIN HANGER		AR		1		
8	-	BAND	BAND		AR		1		
9	MA277895Y	KANCA	HOOK		AR		1		
10	MF457235Y	VİDA	SCREW		AR		1		
11	TA249291-04Y	ARKA PERDE RAYI	RAIL REAR CURTAIN		1		1		
12	TA277897-01Y	STOPLAYICI	STOPPER		2		1		
13	63304-40030-02Y	PERDE KANCASI	CURTAIN HANGER		AR		1		

TEMSA	Halı Carpet	Group No : 30-100 Draw. Num. : x Rev. Date : Page : 1
	Vehicle Model: TB162W, TB162Z, TB162X, TB162Y, TB163W, TB163Z, TB163X, TB163Y	

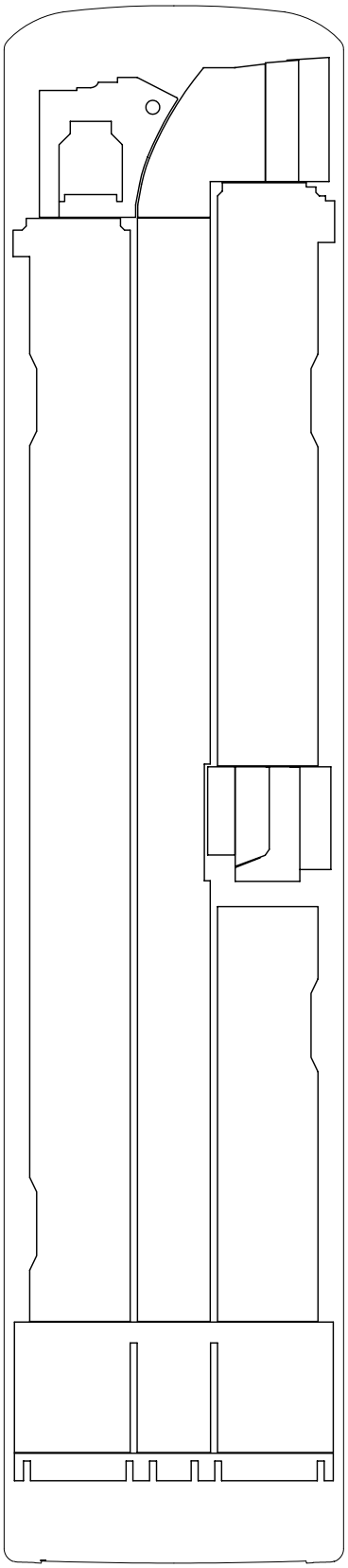

TEMSA	Halı Carpet	Drw.no: Vehicle Model: **TB162W, TB162Z, TB162X, TB162Y** **TB163W, TB163Z, TB163X, TB163Y**	**30-100** RevDate: Page: 1

Pos	Part Number	Turkish	English	German	Qty	R/P	From	Up To	Original Number Supplier
1	H1502200RULO	TABAN HALISI			M2		1		15X2200

TEMSA	Döşeme trimi Floor trimming	Group No : 30-110 Draw. Num. : x Rev. Date : Page : 1
	Vehicle Model: TB162W, TB162Z, TB162X, TB162Y, TB163W, TB163Z, TB163X, TB163Y	

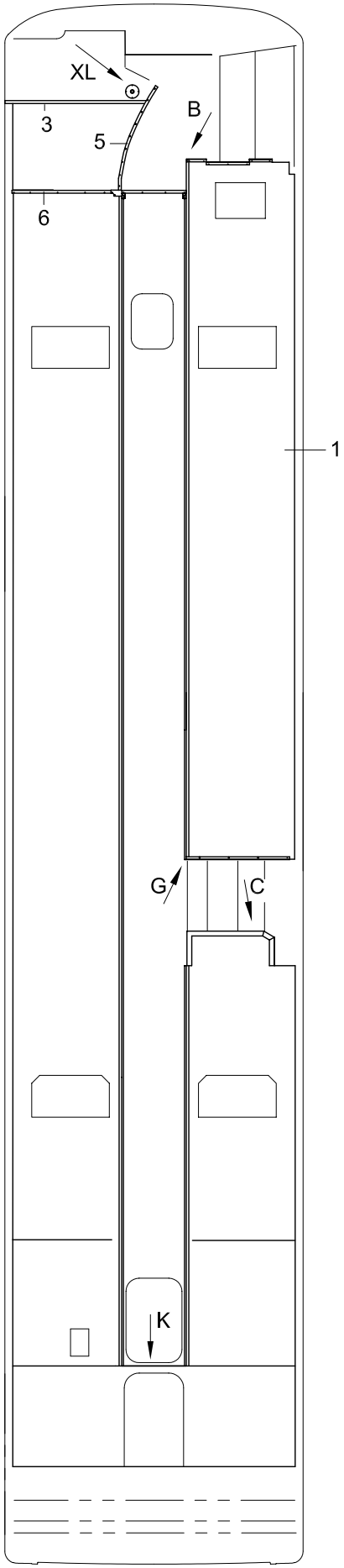

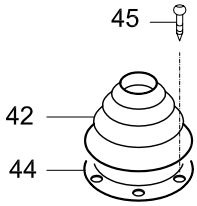

XL- BAKIŞI
DETAIL- XL

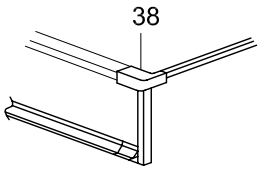

G- BAKIŞI
VIEW- G

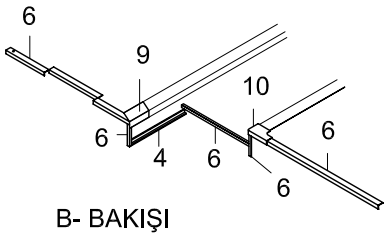

B- BAKIŞI
VIEW- B

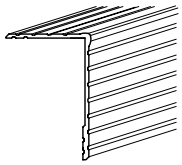

MC258338-02

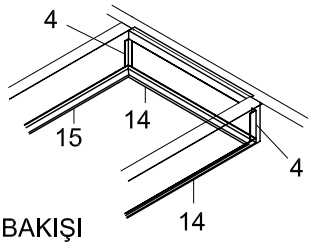

K- BAKIŞI
VIEW- K

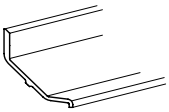

TU202100-02

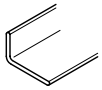

MC258503-03

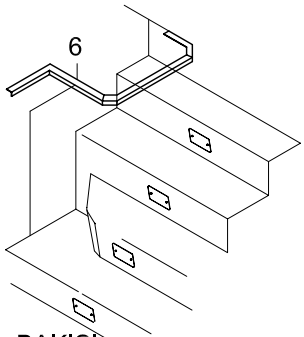

C- BAKIŞI
VIEW- C

TEMSA	Döşeme trimi Floor Trimming	Drw.no: Vehicle Model: TB162W, TB162Z, TB162X, TB162Y TB163W, TB163Z, TB163X, TB163Y	30-110 RevDate: Page: 1

Pos	Part Number	Turkish	English	German	Qty	R/P	From	Up To	Original Number Supplier
1	TES40450-14Y	MUŞAMBA	MAT		AR		1		
3	61723-90019-01Y	ÇITA	PLATE EDGE		AR		1		
4	MC258503-03Y	ÇITA	PLATE EDGE		AR		1		
5	61723-90027-10Y	ÇITA	PLATE EDGE		1		1		
6	MC258338-02Y	ÇITA	PLATE EDGE		AR		1		
9	TC381317Y	KÖŞE	CORNER		2		1	300904	
9	TY202175Y	KÖŞE	CORNER		2		300904		
10	TC381316Y	KÖŞE	CORNER		2		1	300904	
10	TY202175Y	KÖŞE	CORNER		2		300904		
14	TU202100-02Y	ÇITA	PLATE EDGE		AR		1	300904	
15	TU202100-03Y	ÇITA	PLATE EDGE		AR		1	300904	
38	TU202192Y	KÖŞE	CORNER		2		1		
42	18807-26800Y	VİTES KOLU TOZ LASTİĞİ	COVER DUST OUTER		1		1		
44	TC258247Y	KAİDE	BASE DUST COVER		1		1		
45	MF457583Y	VİDA	SCREW		AR		1		

TEMSA

31 DIŞ
EXTERIOR
x

31-010	Dış dikiz aynası - tek cam Rear view mirror outside - single glass x	TB162W TB163W	TB162Z TB163Z	TB162X TB163X	TB162Y TB163Y
31-011	Dış dikiz aynası - çift cam Rear view mirror outside - double glass x	TB162W TB163W	TB162Z TB163Z	TB162X TB163X	TB162Y TB163Y
31-020	Tampon ve çeki kancası Bumper & hook x	TB162W TB163W	TB162Z TB163Z	TB162X TB163X	TB162Y TB163Y
31-030	Silecek kolları Windshield wiper x	TB162W TB163W	TB162Z TB163Z	TB162X TB163X	TB162Y TB163Y
31-040	Silecek su hortumu ve tank Winshield washer x	TB162W TB163W	TB162Z TB163Z	TB162X TB163X	TB162Y TB163Y
31-050	Klima tavan üstü yan panelleri - Safkar klima A/C roof panel, side x	TB162W TB163W	TB162Z TB163Z		
31-051	Klima tavan üstü yan panelleri - Sütrak klima A/C roof panel, side x	TB162W TB163W	TB162Z TB163Z		
31-052	Klima tavan üstü yan panelleri - Safkar klima A/C roof panel, side x			TB162X TB163X	TB162Y TB163Y
31-053	Klima tavan üstü yan panelleri - Slovenya A/C roof panel, side - Slovenia x		TB162Z TB163Z		
31-060	Tavan havalandırma (acil çıkış) ve motor fan Emergency exit & motor fan x	TB162W TB163W	TB162Z TB163Z	TB162X TB163X	TB162Y TB163Y
31-070	Lastik, jant ve jant kapağı Tire, Rim & Wheel Cover Disc x	TB162W TB163W	TB162Z TB163Z	TB162X TB163X	TB162Y TB163Y
31-080	Yedek lastik taşıyıcı Spare tire carrier x	TB162W TB163W	TB162Z TB163Z	TB162X TB163X	TB162Y TB163Y
31-090	Çamurluk ve tozluk Mud guard and splash x	TB162W TB163W	TB162Z TB163Z	TB162X TB163X	TB162Y TB163Y
31-090	Etiket Label x	TB162W TB163W	TB162Z TB163Z	TB162X TB163X	TB162Y TB163Y

TEMSA	Dış dikiz aynası - tek cam Rear view mirror outside - single glass Äussere Rückspiegeln	Group No : 31-010 Draw. Num. : x Rev. Date : Page : 1
	Vehicle Model: TB162W, TB162Z, TB162X, TB162Y, TB163W, TB163Z, TB163X, TB163Y	

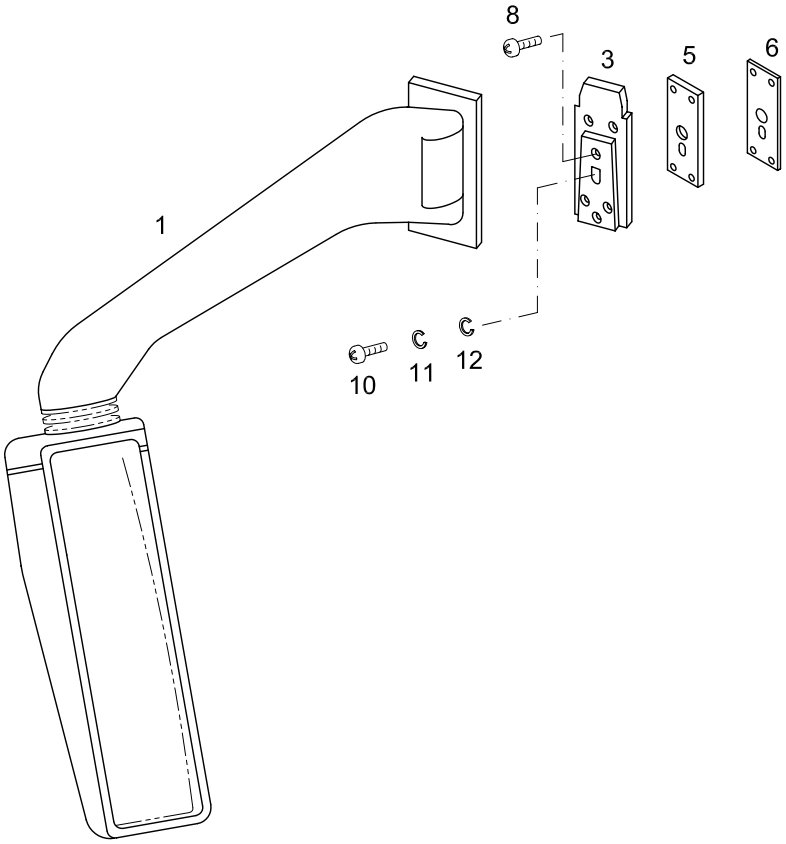

LH
LINKS

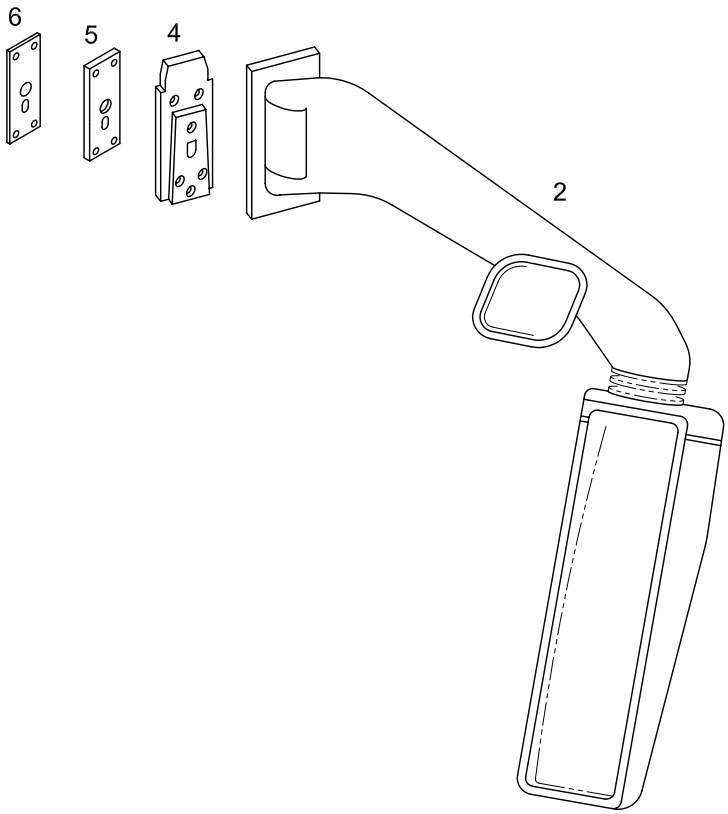

RH
RECHTS

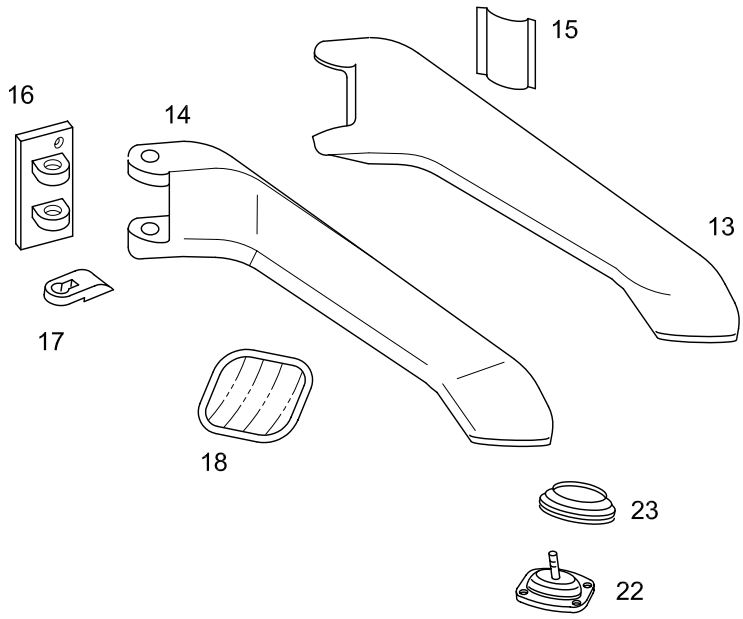
15
16
14
13
17
18
23
22

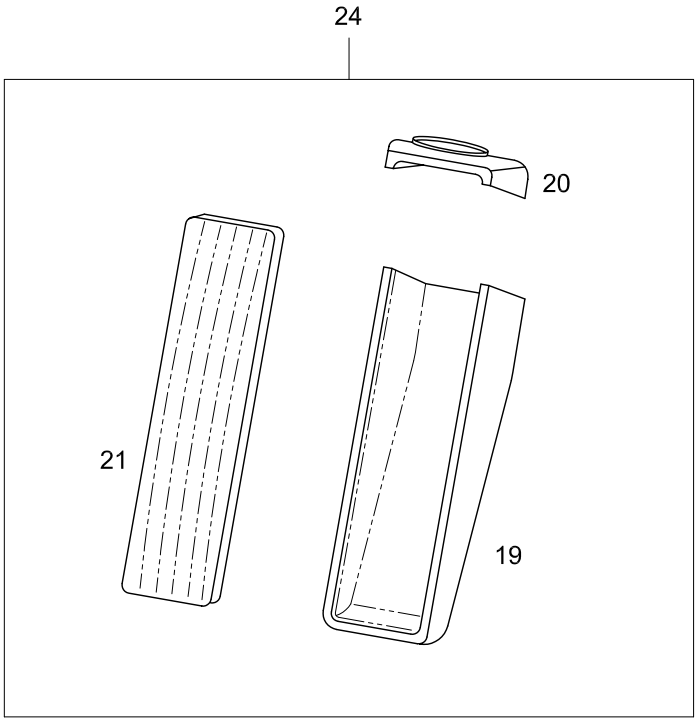
24
20
21
19

TEMSA	Dış dikiz aynası - tek cam Rear view mirror outside - single glass Äussere Rückspiegeln	Drw.no 63336-70017-70 / 80 Vehicle Model: **TB162W, TB162Z, TB162X, TB162Y** **TB163W, TB163Z, TB163X, TB163Y**	**31-010** RevDate: Page: 1

Pos	Part Number	Turkish	English	German	Qty	R/P	From	Up To	Original Number Supplier
1	63336-70058-70	DIŞ AYNA - SOL	MIRROR OUTSIDE - LH		1		1	021004	8SB 501 246-8206 WILKE
2	63336-70058-71	DIŞ AYNA - SAĞ	MIRROR OUTSIDE - RH		1		1	021004	8SB 501 246-9006 WILKE
3	TU301131	BRAKET SOL	BRACKET LH		1		1		9BP 501 238-0101 WILKE
4	63336-70028-71	BRAKET - SAĞ	BRACKET - RH		1		1		9BP 501 238-0201 WILKE
5	TC332347Y	AYAR PARÇASI	SPACER		1		1		
6	TC332348Y	KORUYUCU	PROTECTOR		1		1		
8	TF201597Y	VİDA	SCREW MACHINE		2		1		8*25
10	TF200102Y	VİDA	SCREW TAPPING		AR		1		M8*1.25*20
11	MF450405Y	RONDELA	WASHER SPRING		AR		1		A8
12	MF450005Y	PUL	WASHER PLAIN		AR		1		A8.5
13	63336-70058-30X	AYNA KOLU KAPLAMASI	ARM COVER ASSEMBLY		1		1		9HB 562 824-021 WİLKE
14	63336-70058-40X	AYNA KOLU KOMPLE	MIRROR ARM ASSEMBLY		1		1		8HG 562 827-001 WILKE
15	63336-70058-50X	KAPAK	COVER		1		1		9HD 562 802-011 WILKE
16	63336-70058-60X	TUTUCU	HOLDER		1		1		9XD 562 800 -051 WILKE
17	63336-70058-61X	TUTUCU ALTLIĞI	SUPPORT HOLDER		1		1		9BP 562 821-011 WILKE
18	63336-70058-65X	KALDIRIM AYNASI KOMPLE	MIRROR UNDER COMPLETTE		1		1		8SB 501 346-001 WILKE
19	63336-70058-01X	AYNA ALT KAPAK	HOUSING BOTTOM SECTION		1		1		9BG 562 814-001 WILKE
20	63336-70058-02X	AYNA ÜST KAPAĞI	HOUSING UPPER SECTION		1		1		9BG 562 812-001 WILKE
21	63336-70058-03X	AYNA CAMI	MIRROR GLASS CARRIER		1		1		9MX 562 841-001 WILKE
22	63336-70058-66X	AYNA AYARLAYICI	LIGHT RANGE ADJ.		1		1		9SV 562 840-001 WILKE
23	63336-70058-20X	KÖRÜK	BELLOWS		1		1		8GH 562 803-001 WILKE
24	63336-70058-10X	AYNA KOMPLE	MIRROR HEAD COMPLETE		1		1		8SB 562 820-011

TEMSA	Dış dikiz aynası - çift cam Rear view mirror outside - double glass Äussere Rückspiegeln	Group No : 31-011 Draw. Num. : x Rev. Date : Page : 1
	Vehicle Model: TB162W, TB162Z, TB162X, TB162Y, TB163W, TB163Z, TB163X, TB163Y	

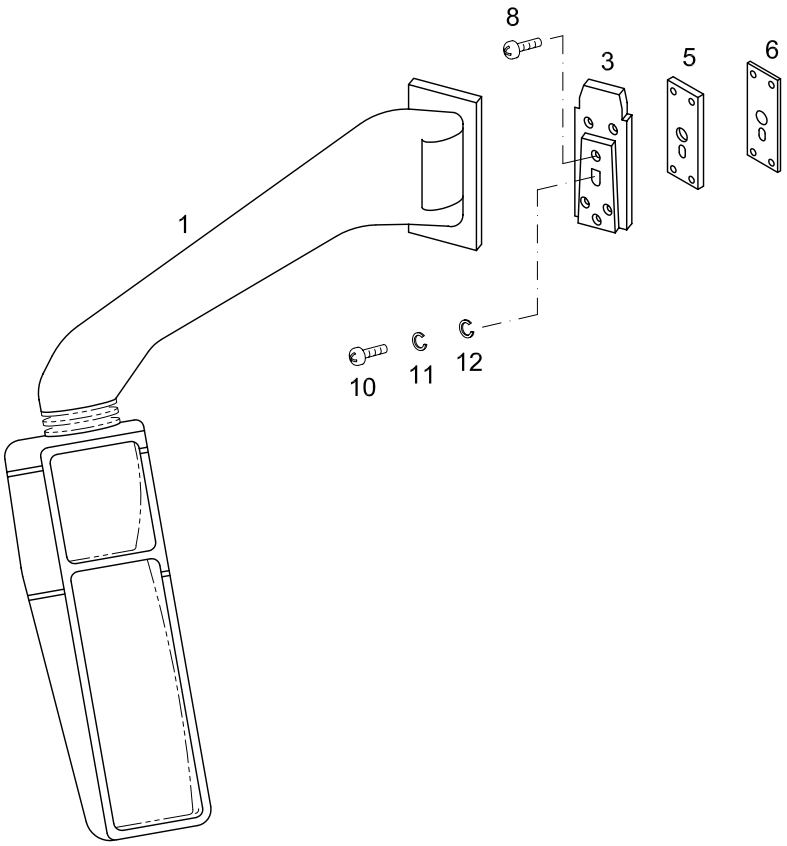

LH
LINKS

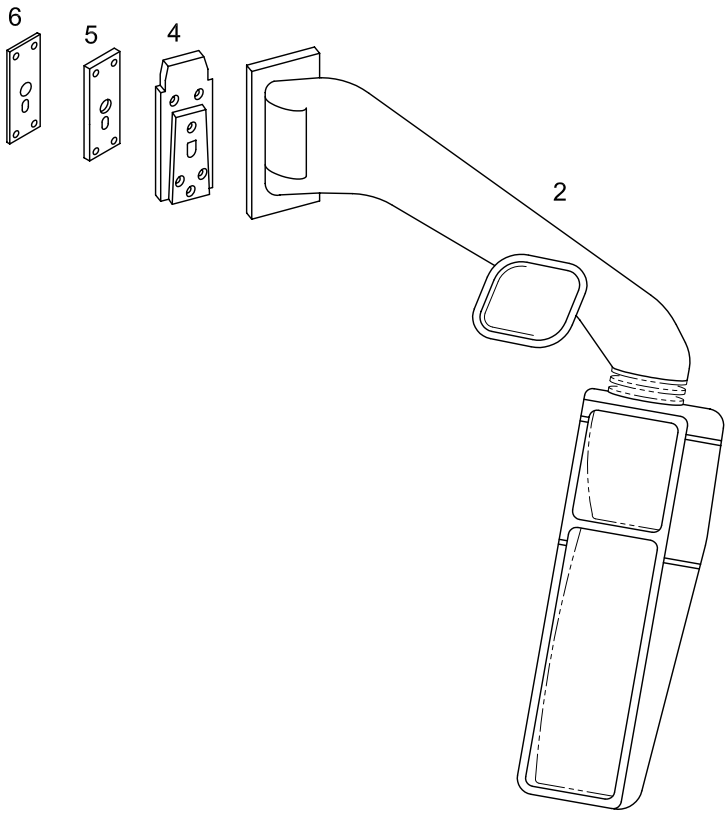

RH
RECHTS

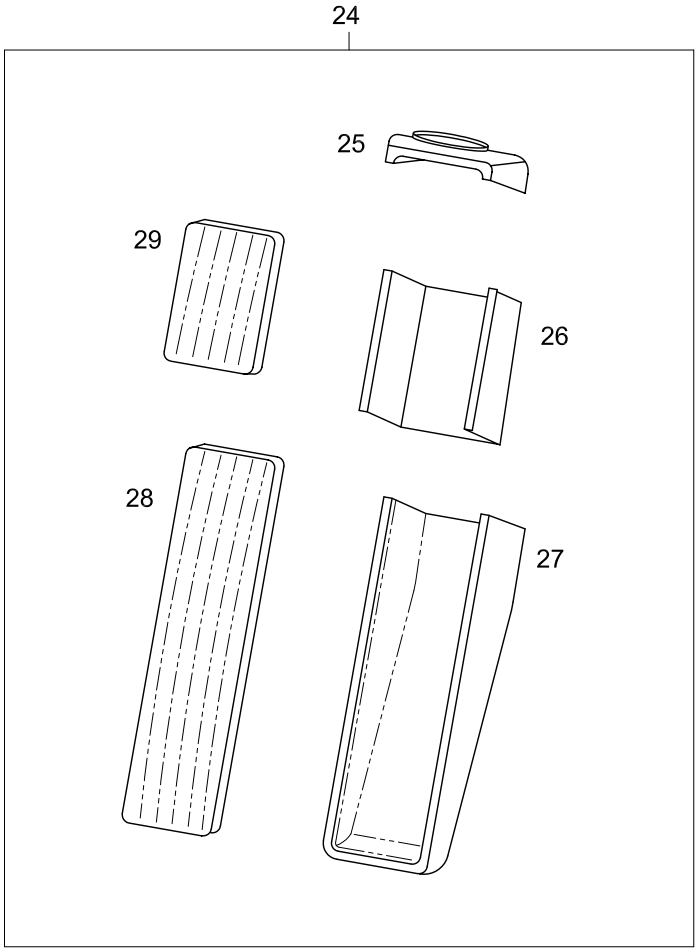
24
25
29
26
28
27

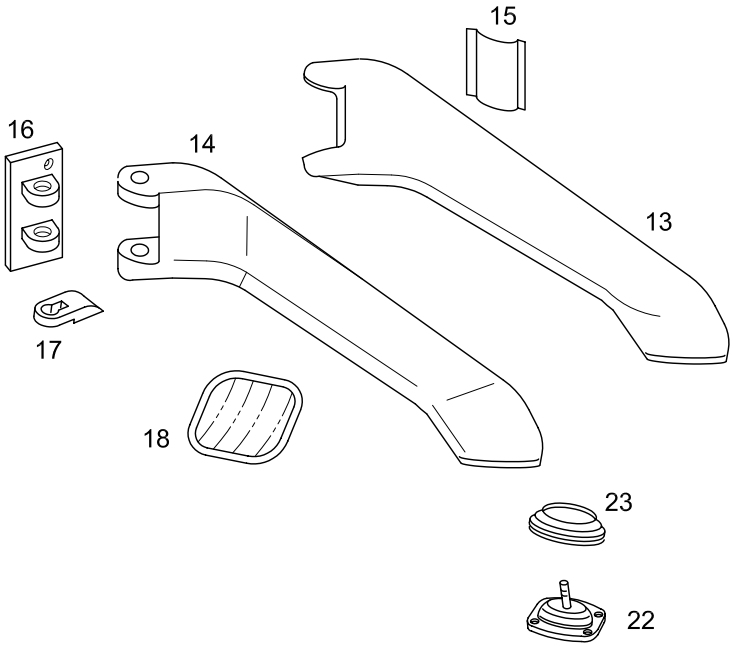
15
16
14
13
17
18
23
22

TEMSA	Dış dikiz aynası - çift cam Rear view mirror outside - double glass Äussere Rückspiegeln	Drw.no 63336-70017-70/80 Vehicle Model: **TB162W, TB162Z, TB162X, TB162Y** **TB163W, TB163Z, TB163X, TB163Y**	**31-011** RevDate: Page: 1

Pos	Part Number	Turkish	English	German	Qty	R/P	From	Up To	Original Number Supplier
1	TU301132	DIŞ AYNA - SOL	MIRROR OUTSIDE - LH		1		021004		WILKE
2	TU301135	DIŞ AYNA - SAĞ	MIRROR OUTSIDE - RH		1		021004		8SB 501 420 8009 WILKE
3	TU301131	BRAKET SOL	BRACKET LH		1		1		9BP 501 238-0101 WILKE
4	63336-70028-71	BRAKET - SAĞ	BRACKET - RH		1		1		9BP 501 238-0201 WILKE
5	TC332347Y	AYAR PARÇASI	SPACER		1		1		
6	TC332348Y	KORUYUCU	PROTECTOR		1		1		
8	TF201597Y	VİDA	SCREW MACHINE		2		1		8*25
10	TF200102Y	VİDA	SCREW TAPPING		AR		1		M8*1.25*20
11	MF450405Y	RONDELA	WASHER SPRING		AR		1		A8
12	MF450005Y	PUL	WASHER PLAIN		AR		1		A8.5
13	63336-70058-30X	AYNA KOLU KAPLAMASI	ARM COVER ASSEMBLY		1		1		9HB 562 824-021 WILKE
14	63336-70058-40X	AYNA KOLU KOMPLE	MIRROR ARM ASSEMBLY		1		1		8HG 562 827-001 WILKE
15	TU301116X	KAPAK	COVER		1		1		9HD 562 802-011 WILKE
16	63336-70058-60X	TUTUCU	HOLDER		1		1		9XD 562 800 -051 WILKE
17	63336-70058-61X	TUTUCU ALTLIĞI	SUPPORT HOLDER		1		1		9BP 562 821-011 WILKE
18	TU301130X	KALDIRIM AYNASI KOMPLE	MIRROR UNDER COMPLETTE		1		1		9GH 562 802-011 WILKE
22	63336-70058-66X	AYNA AYARLAYICI	LIGHT RANGE ADJ.		1		1		9SV 562 840-001 WILKE
23	63336-70058-20X	KÖRÜK	BELLOWS		1		1		8GH 562 803-001 WILKE
24	TU301106X	AYNA KOMPLE	MIRROR HEAD COMPLETE		1		1		8SB 562 819 -001 WILKE
25	63336-70058-02X	AYNA ÜST KAPAĞI	HOUSING UPPER SECTION		1		021004		9BG 562 812-001 WILKE
26	TU301108X	ORTA YUVA	HOUSING CENTER		1		021004		9BG 562 813-0012 WILKE
27	63336-70058-01X	AYNA ALT KAPAK	HOUSING BOTTOM SECTION		1				9BG 562 814-001 WILKE
28	63336-70058-03X	AYNA CAMI	MIRROR GLASS CARRIER		1		021004		9MX 562 841-001 WILKE
29	TU301111X	AYNA CAMI	MIRROR GLASS CARRIER		1		021004		9MX 562 846-001 WILKE

TEMSA	Tampon ve çeki kancası Bumper & hook Stosstange und Abschlepphaken	Group No : 31-020 Draw. Num. : x Rev. Date :
	Vehicle Model: TB162W, TB162Z, TB162X, TB162Y, TB163W, TB163Z, TB163X, TB163Y	Page : 1

ÖN
FRONT

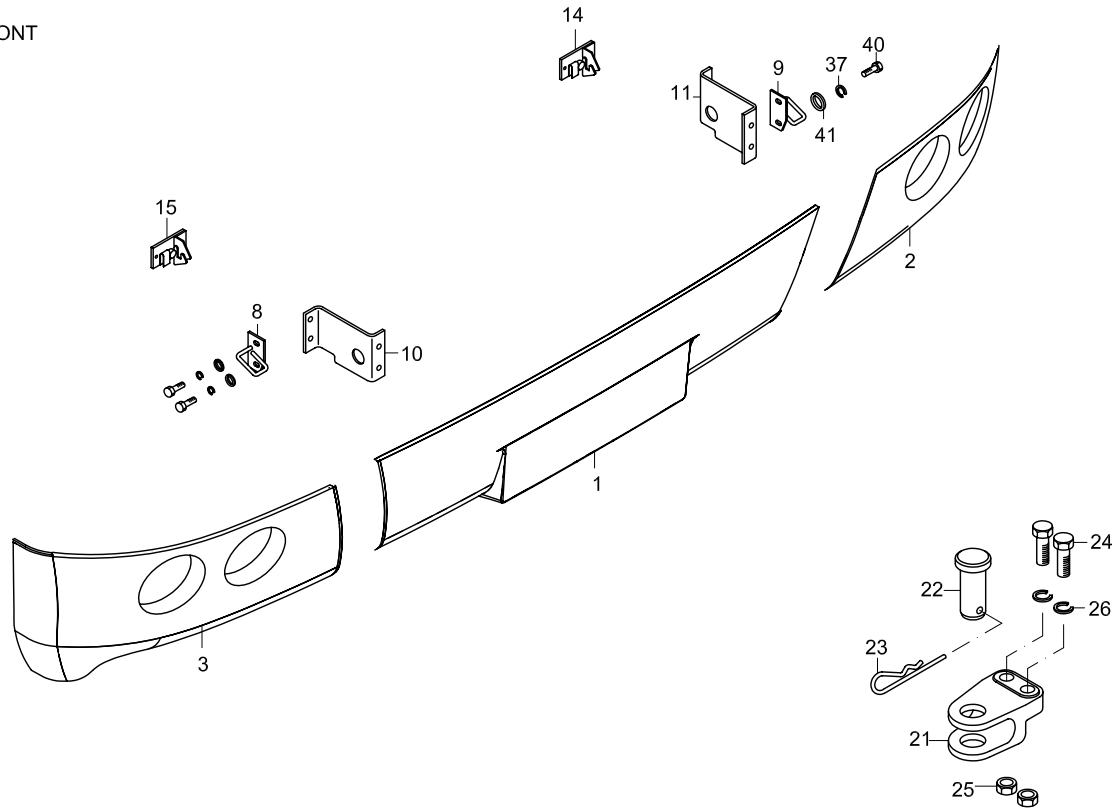

ARKA
REAR

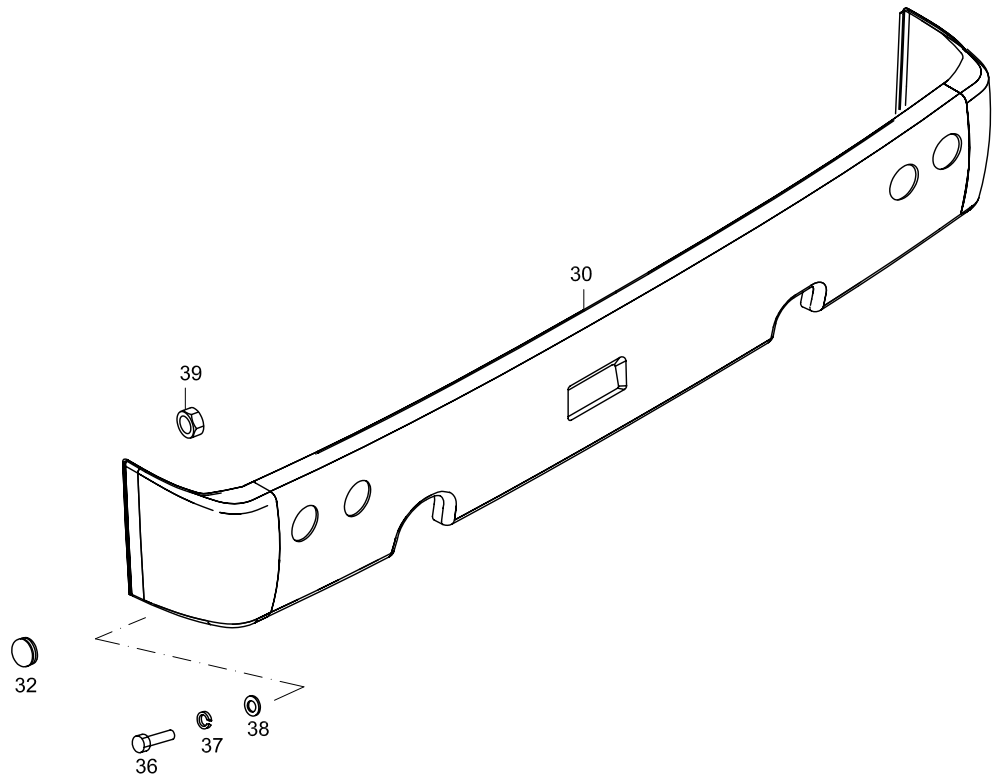

TEMSA	Tampon ve çeki kancası Bumper & hook Stosstange und Abschlepphaken	Drw.no TC299548-046 / 61802-90230-70 Vehicle Model: TB162W, TB162Z, TB162X, TB162Y TB163W, TB163Z, TB163X, TB163Y	31-020 RevDate: Page: 1

Pos	Part Number	Turkish	English	German	Qty	R/P	From	Up To	Original Number Supplier
1	TC241389-01Y	ÖN ORTA TAMPON	FR BUMPER CENTER		1		1		
2	TC299548-142Y	ÖN SOL TAMPON	FR BUMPER LH		1		1		
3	TV270103Y	ÖN SAĞ TAMPON	FR BUMPER RH		1		1		
8	MC241381Y	KİLİT DİLİ - SOL	CATCH - LH		1		1		
9	MC241382Y	KİLİT DİLİ SAĞ	CATCH - RH		1		1		
10	MC241383Y	BRAKET SOL	BRACKET LH		1		1		
11	MC241384Y	BRAKET SAĞ	BRACKET RH		1		1		
14	MC241378Y	KİLİT - SOL	LOCK - LH		1		1		
15	MC241379Y	KİLİT - SAĞ	LOCK - RH		1		1		
21	TC417030Y	ÇEKİ KANCASI BRAKETİ	HOOK, BRACKET		1		1		
22	TC417031Y	PERNO	PIN		1		1		
23	TC417033Y	KOPİLYA	PIN SPLIT		1		1		
24	MF101285PY	CIVATA	BOLT		AR		1		
25	MF430008PY	SOMUN	NUT		AR		1		
26	MF450408PY	RONDELA	WASHER SPRING		AR		1		
30	61802-90130-70Y	ARKA TAMPON	REAR BUMPER		1		1		
32	TC299640-30Y	TAPA	PLUG		AR		1		
36	MF200077Y	CIVATA	BOLT		AR		1		
37	MF450404Y	RONDELA	WASHER SPRING		AR		1		
38	MF450406Y	RONDELA	WASHER SPRING		AR		1		
39	MF450006Y	PUL	WASHER PLAIN		AR		1		
40	MF100027Y	CIVATA	BOLT		AR		1		
41	MF450004Y	PUL	WASHER PLAIN		AR		1		

TEMSA	Silecek kolları Windshield wiper Wischerhebeln	Group No : 31-030 Draw. Num. : x Rev. Date : Page : 1
	Vehicle Model: TB162W, TB162Z, TB162X, TB162Y, TB163W, TB163Z, TB163X, TB163Y	

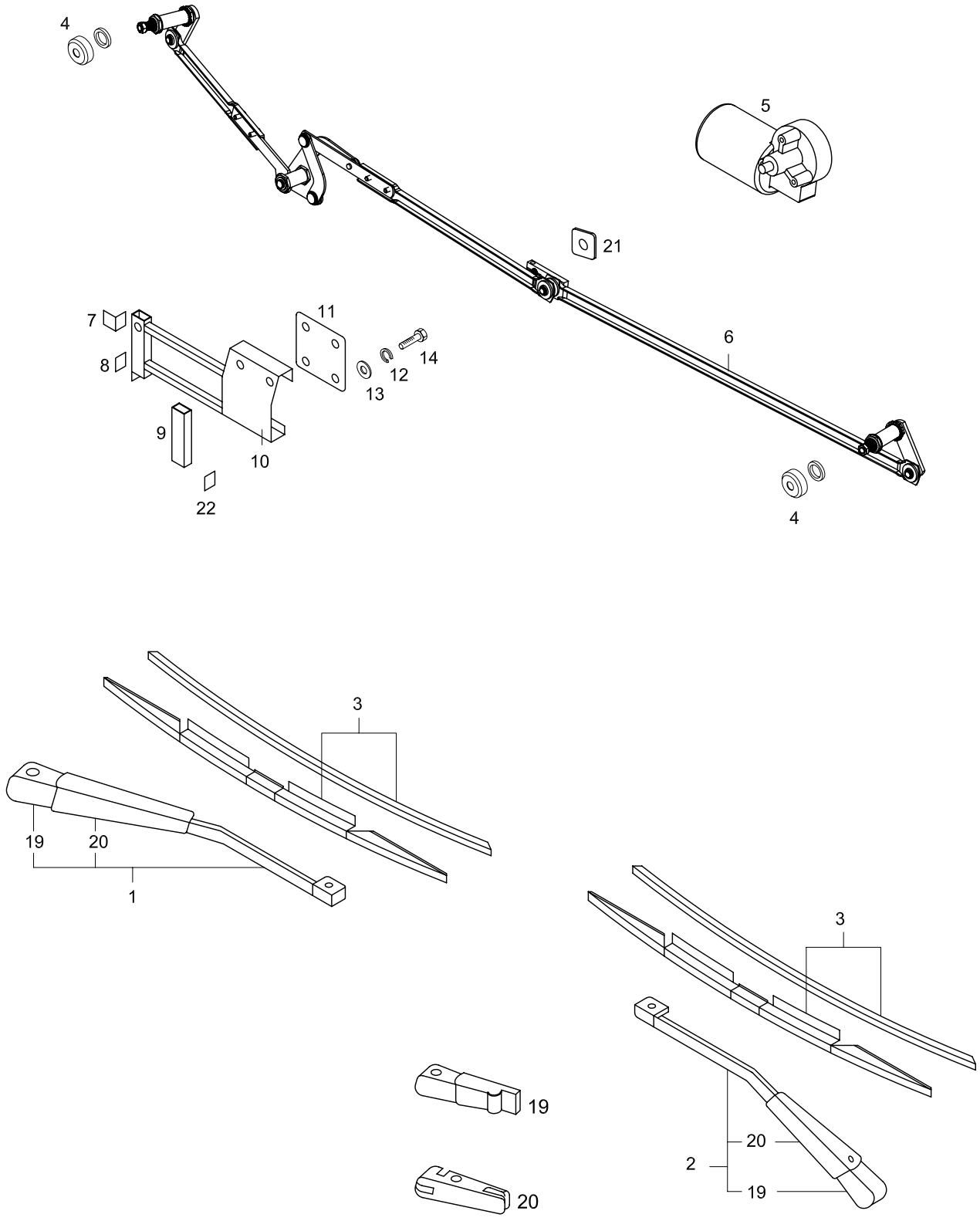

TEMSA	Silecek kolları Windshield wiper Wischerhebeln	Drw.no : 64211-96260-70 Vehicle Model: **TB162W, TB162Z, TB162X, TB162Y** **TB163W, TB163Z, TB163X, TB163Y**	**31-030** RevDate: Page: 1

Pos	Part Number	Turkish	English	German	Qty	R/P	From	Up To	Original Number Supplier
1	74121-00320-81Y	SİLECEK KOLU - SAĞ	ARM ASSY - RH		1		1		
2	74121-00320-80Y	SİLECEK KOLU - SOL	ARM ASSY - LH		1		1		
3	74121-00330-72	SİLECEK LASTİĞİ	BLADE ASSY		2		1		104 257 TECHNO EXPORT
4	MC327717	BURÇ	BUSHING		2		1		
5	74121-00300-81	SİLECEK MOTORU	MOTOR		1		1		0 390 442 402 BOSH
6	74121-00310-80	SİLECEK MEKANİZMASI	LINK ASSY		1		1		
7	64211-40140-00X	PLAKA	PLATE		1		1		
8	64211-40110-00X	PLAKA	PLATE		1		1		
9	64211-40130-00X	BORU	PIPE		1		1		
10	64211-40050-02X	BRAKET	BRACKET		1		1		
11	64211-40060-00X	PLAKA	PLATE		1		1		
12	MF450405Y	RONDELA	WASHER SPRING		AR		1		A8
13	MF450154Y	PUL	WASHER PLAIN		AR		1		A8.4
14	MF101255Y	CIVATA	BOLT		AR		1		M8*1.25*20
19	74121-00320-06X	KAPAK	COVER		2		1		
20	74121-00320-15X	ZAMAK YATAK	ZAMAK		2		1		not available any more
21	64211-30260-10Y	TOZ LASTİĞİ	RUBBER DUST		2		1		
22	64211-40120-00X	PLAKA	PLATE		1		1		

TEMSA	Silecek su hortumu ve tank Windshield washer Wischer Wasserschlauch und Tank	Group No : 31-040 Draw. Num. : x Rev. Date : Page : 1
	Vehicle Model: TB162W, TB162Z, TB162X, TB162Y, TB163W, TB163Z, TB163X, TB163Y	

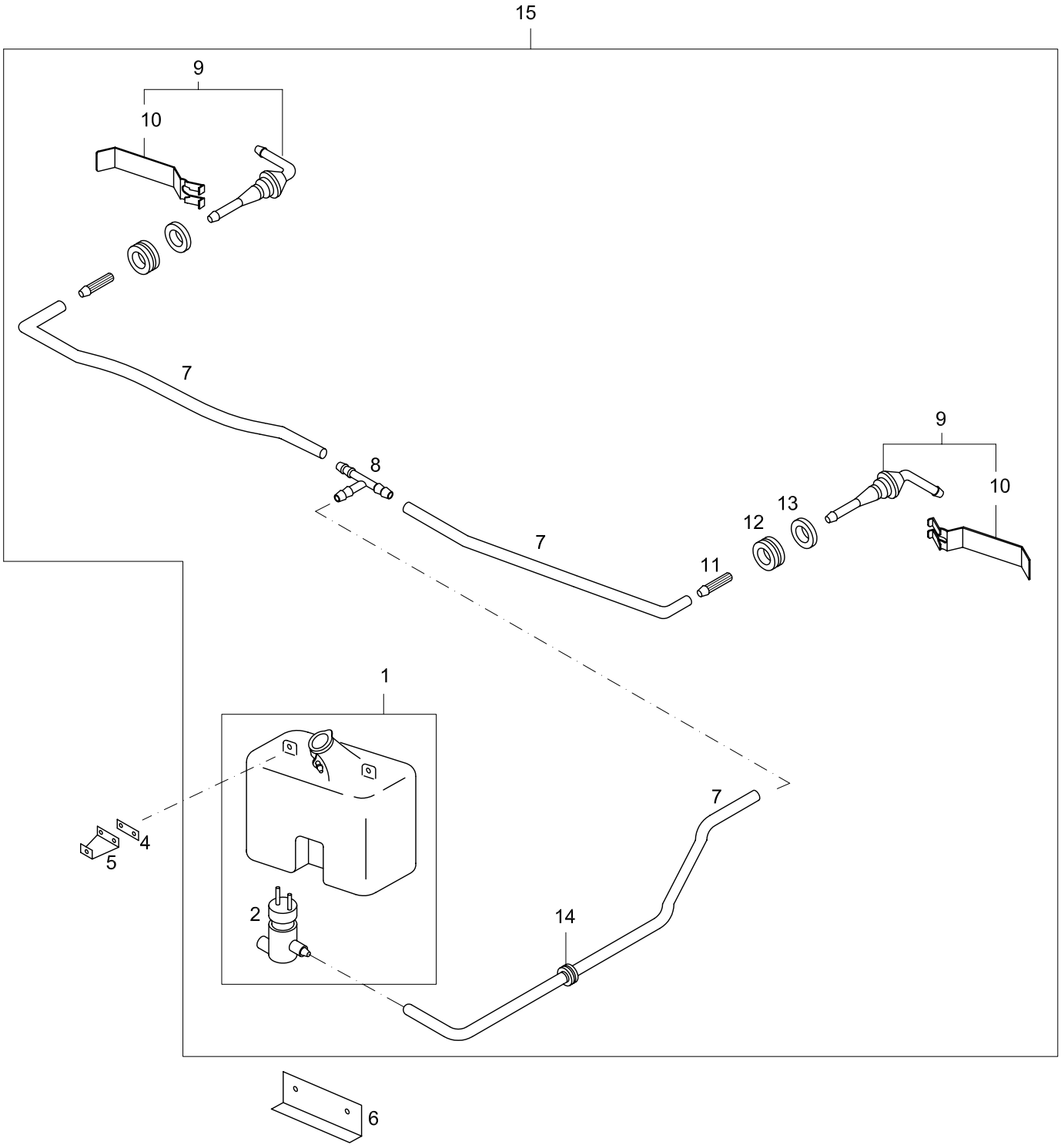

TEMSA	Silecek su hortumu ve tank Winshield washer Wischer Wasserschlauch und Tank	Drw.no : 64211-70280-70 Vehicle Model: **TB162W, TB162Z, TB162X, TB162Y** **TB163W, TB163Z, TB163X, TB163Y**	**31-040** RevDate: Page: 1

Pos	Part Number	Turkish	English	German	Qty	R/P	From	Up To	Original Number Supplier
1	TC336085X	SU TANKI VE POMPA	TANK AND PUMP ASSY		1		1		
2	MC336085-03X	SU POMPASI	WATER PUMP		1		1		
4	TC327840-08Y	TANK BRAKETİ	BRACKET TANK		2		1		
5	TC327840-06Y	TANK BRAKETİ	BRACKET TANK		2		1		
6	TC327840-07Y	TANK BRAKETİ	BRACKET TANK		1		1		
7	MC327841-02X	HORTUM	HOSE		AR		1		
8	MA224804X	T-KONNEKTÖR	JOINT -T		1		1		
9	MC327840-01X	FİSKİYE	JOINT		2		1		
10	MC327840-02X	FİSKİYE BRAKETİ	JOINT BRACKET		2		1		not available any more delete
11	TV251100X	VALF	VALVE STOP		2		1		
12	MA275702Y	GROMMET d:18, e:1.6	GROMMET d:18, e:1.6		2		1		
13	MC327840-05X	BURÇ	BUSHING		2		1		
14	MA275729Y	GROMMET d:14 , e:4.5	GROMMET d:14 , e:4.5		1		1		
15	MC327850Y	CAM YIKAMA SETİ	WINDSHIELD WASHER SET		SET		080404		

TEMSA	Klima tavan üstü yan panelleri - Safkar klima A/C roof panel, side Seitenpaneele für Deckenklima	Group No : 31-050 Draw. Num. : x Rev. Date : Page : 1
	Vehicle Model: TB162W, TB162Z, TB163W, TB163Z,	

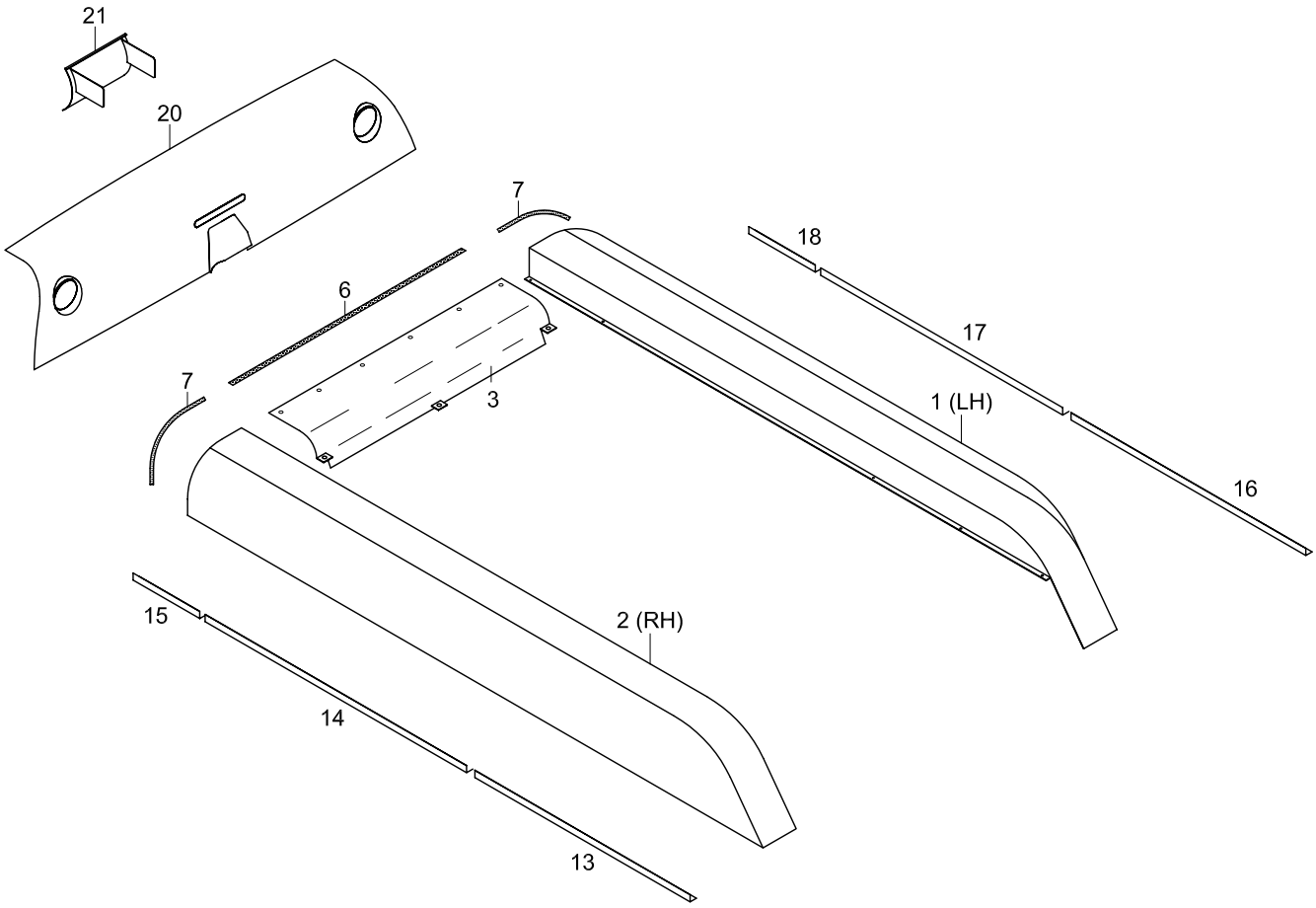

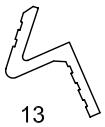

13
14
15
16
17
18

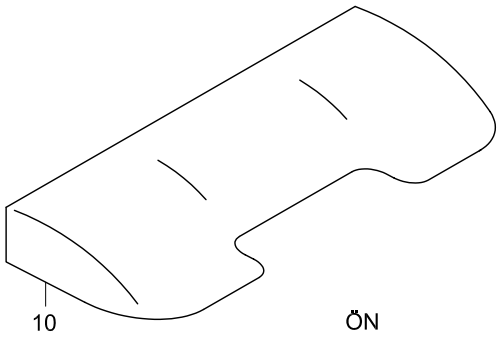

ÖN
FRONT

TEMSA	Klima tavan üstü yan panelleri - Safkar klima A/C roof panel, side Seitenpaneele für Deckenklima	62201-90240-70/62310-96150-72 Vehicle Model: **TB162W, TB162Z,** **TB163W, TB163Z,**	**31-050** RevDate: Page: 1

Pos	Part Number	Turkish	English	German	Qty	R/P	From	Up To	Original Number Supplier
1	62310-96150-01Y	PANEL SOL	PANEL LH		1		1		
2	62310-96150-02Y	PANEL SAĞ	PANEL RH		1		1		
3	62310-80160-70Y	PANEL ARKA	PANEL REAR		1		1		
6	TC258526-01Y	FİTİL	WEATHER STRIP		1		1		L:1430mm
7	TC258526-01Y	FİTİL	WEATHER STRIP		2		1		L:650mm
10	62310-97150-04Y	ÖN PANEL	FRONT PANEL		1		1		
13	62310-96150-51Y	ÇITA SOL	PLATE LH		1		1		L:1975mm
14	62310-96150-52Y	ÇITA SOL	PLATE LH		1		1		L:2000mm
15	62310-96150-53Y	ÇITA SOL	PLATE LH		1		1		L:367mm
16	62310-96150-54Y	ÇITA SAĞ	PLATE RH		1		1		L:1975mm
17	62310-96150-55Y	ÇITA SAĞ	PLATE RH		1		1		L:2000mm
18	62310-96150-56Y	ÇITA SAĞ	PLATE RH		1		1		L:367mm
20	62201-90050-70AY	ARKA PANEL	REAR SPOILER		1		1		
21	62201-90240-01Y	BRAKET	BRACKET		1		1		

TEMSA	Klima tavan üstü yan panelleri - Sütrak klima A/C roof panel, side Seitenpaneele für Deckenklima	Group No : 31-051 Draw. Num. : x Rev. Date : Page : 1
	Vehicle Model: TB162W, TB162Z, TB163W, TB163Z,	

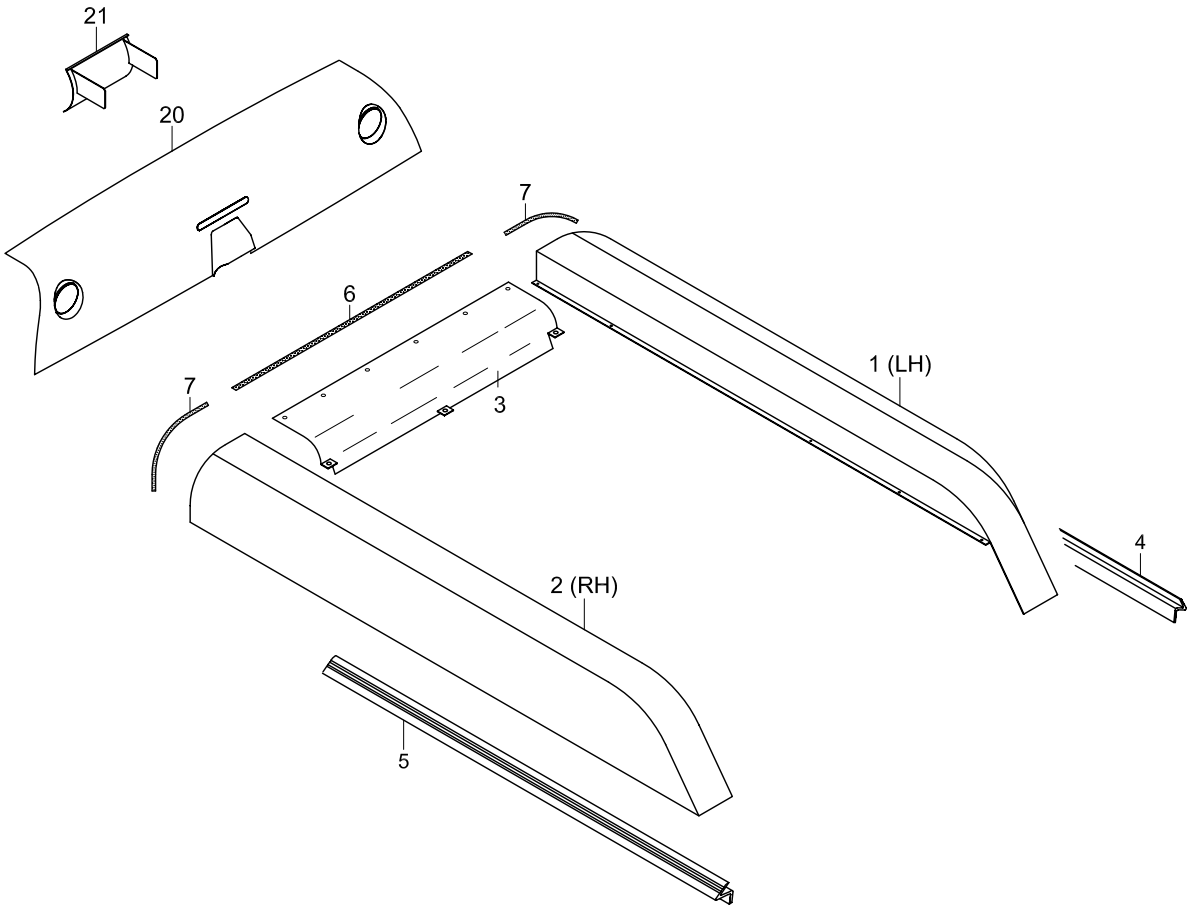

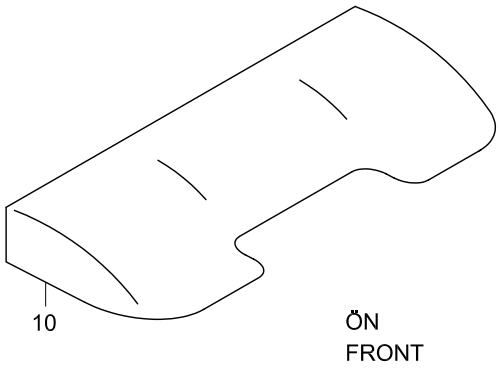

TEMSA	Klima tavan üstü yan panelleri - Sütrak klima A/C roof panel, side Seitenpaneele für Deckenklima	62201-90240-70/ 62310-96150-73 Vehicle Model: **TB162W, TB162Z,** **TB163W, TB163Z,**	**31-051** RevDate: Page: 1

Pos	Part Number	Turkish	English	German	Qty	R/P	From	Up To	Original Number Supplier
1	62310-96150-03Y	PANEL SOL	PANEL LH		1		1		
2	62310-96150-04Y	PANEL SAĞ	PANEL RH		1		1		
3	62310-80160-70Y	PANEL ARKA	PANEL REAR		1		1		
4	62310-90100-06Y	ÇITA SOL	PLATE LH		1		1		
5	62310-90100-07Y	ÇITA SAĞ	PLATE RH		1		1		
6	TC258526-01Y	FİTİL	WEATHER STRIP		1		1		L:1430mm
7	TC258526-01Y	FİTİL	WEATHER STRIP		2		1		L:650mm
10	62310-97150-04Y	ÖN PANEL	FRONT PANEL		1		1		
20	62201-90050-70AY	ARKA PANEL	REAR SPOILER		1		1		
21	62201-90240-01Y	BRAKET	BRACKET		1		1		

TEMSA	Klima tavan üstü yan panelleri - Safkar klima A/C roof panel, side Seitenpaneele für Deckenklima	Group No : 31-052 Draw. Num. : x Rev. Date : Page : 1
	Vehicle Model: TB162X, TB162Y, TB163X, TB163Y	

option: BSLOVENYA_01

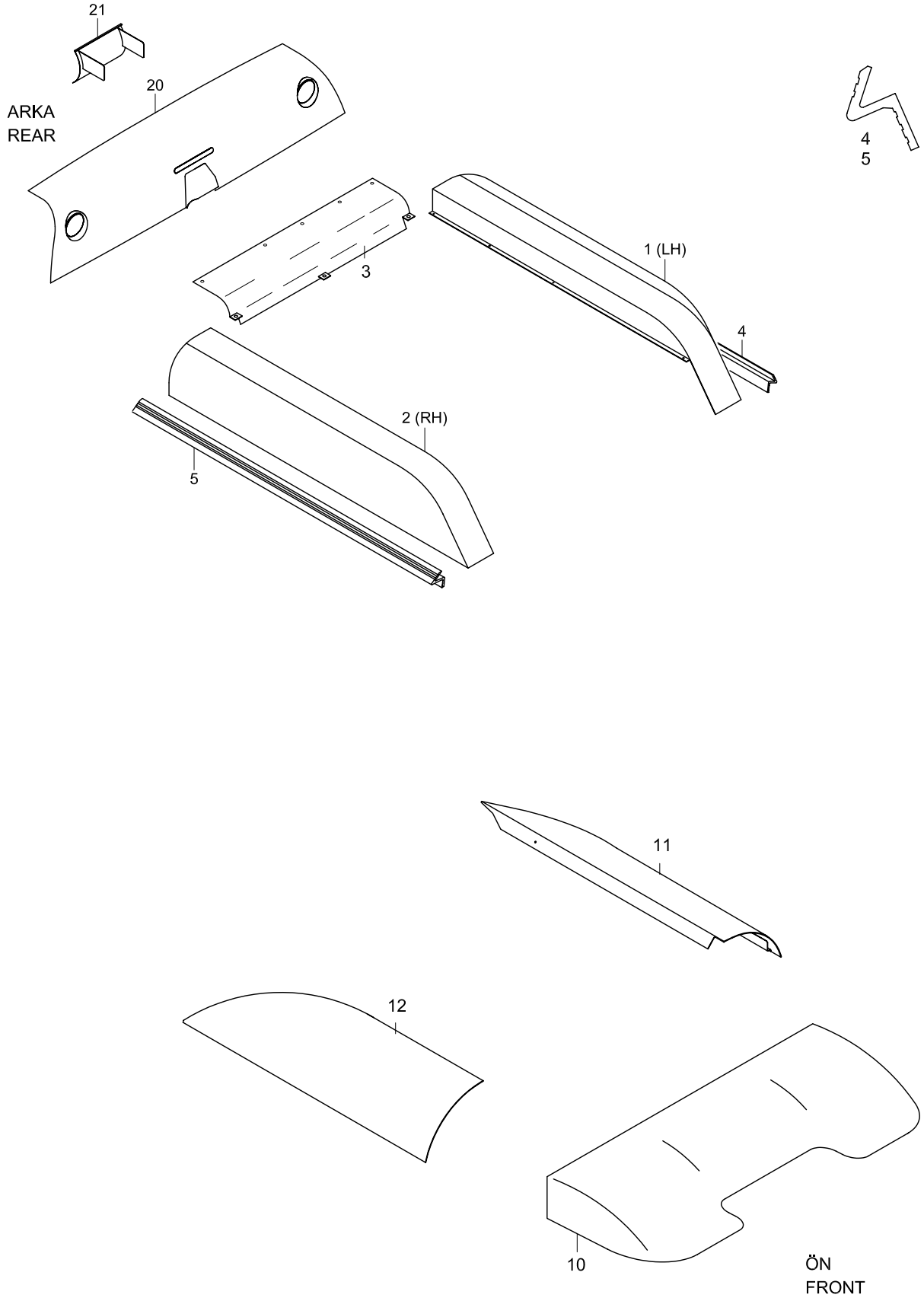

TEMSA	Klima tavan üstü yan panelleri - Safkar klima A/C roof panel, side Seitenpaneele für Deckenklima	62201-90240-70/ 62310-98150-70 Vehicle Model: **TB162X, TB162Y,** **TB163X, TB163Y,**	**31-052** RevDate: Page: 1

Pos	Part Number	Turkish	English	German	Qty	R/P	From	Up To	Original Number Supplier
1	62310-94000-01Y	PANEL SOL	PANEL LH		1		1		
2	62310-94000-02Y	PANEL SAĞ	PANEL RH		1		1		
3	62310-80160-70Y	PANEL ARKA	PANEL REAR		1		1		
4	62310-94000-03Y	ÇITA SOL	PLATE LH		1		1		
5	62310-94000-04Y	ÇITA SAĞ	PLATE RH		1		1		
6	TC258526-01Y	FİTİL	WEATHER STRIP		MT		1		L:1430mm
7	TC258526-01Y	FİTİL	WEATHER STRIP		MT		1		L:650mm
10	62310-97150-04Y	ÖN PANEL	FRONT PANEL		1		1		
11	62310-94000-06Y	SOL PANEL	PANEL -LH		1		1		
12	62310-94000-07Y	SAĞ PANEL	PANEL -RH		1		1		
20	62201-90050-70AY	ARKA PANEL	REAR SPOILER		1		1		
21	62201-90240-01Y	BRAKET	BRACKET		1		1		

TEMSA	Klima tavan üstü yan panelleri - Slovenya A/C roof panel, side - Slovenia Seitenpaneele für Deckenklima	Group No : 31-053 Draw. Num. : x Rev. Date :
	Vehicle Model: TB162Z, TB163Z,	Page : 1

option: BSLOVENYA_01

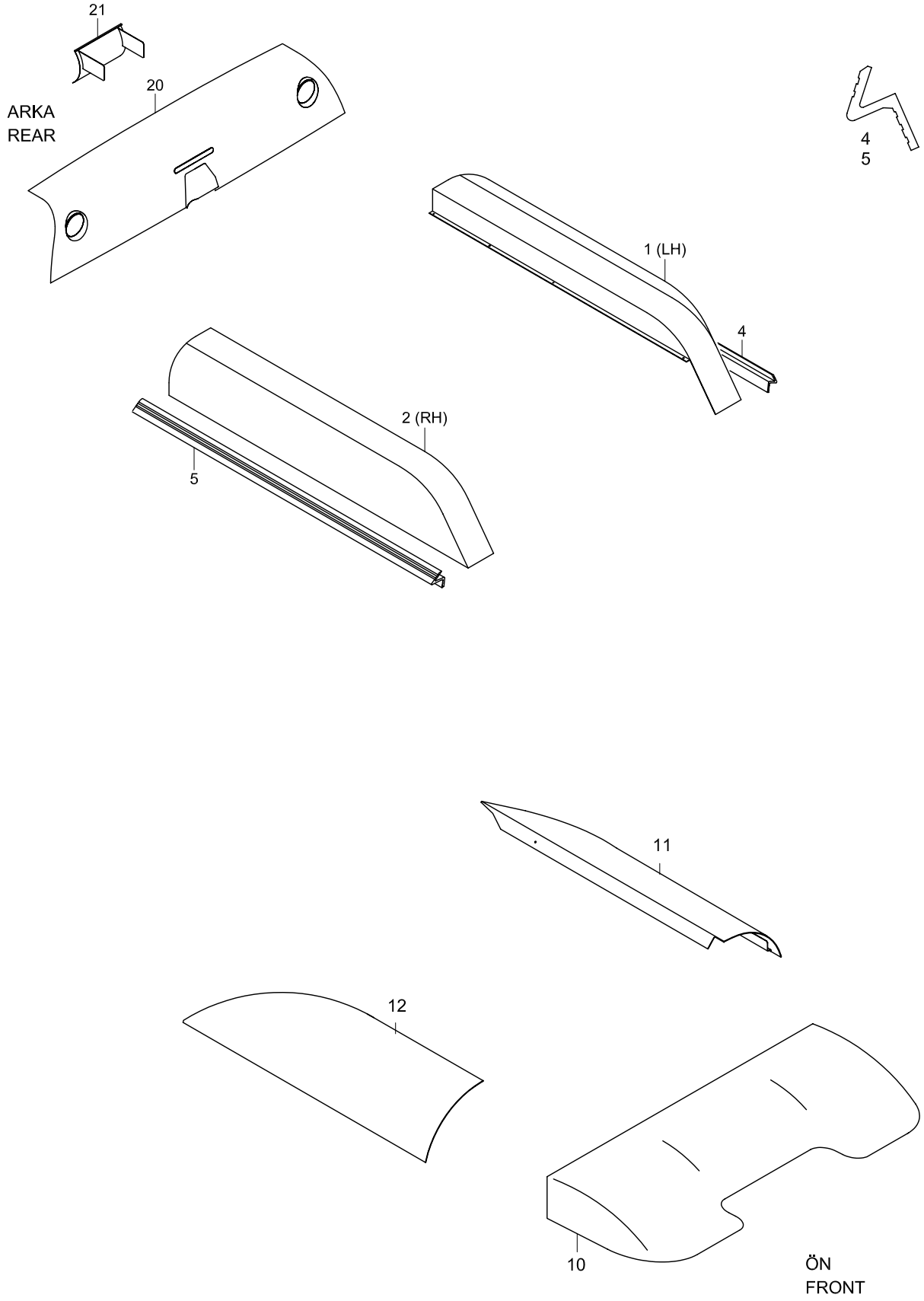

TEMSA	Klima tavan üstü yan panelleri - Slovenya A/C roof panel, side - Slovenia Seitenpaneele für Deckenklima	Group No : 31-053 Draw. Num. : x Rev. Date : Page : 2
	Vehicle Model: TB162Z, TB163Z,	

option: BSLOVENYA_02

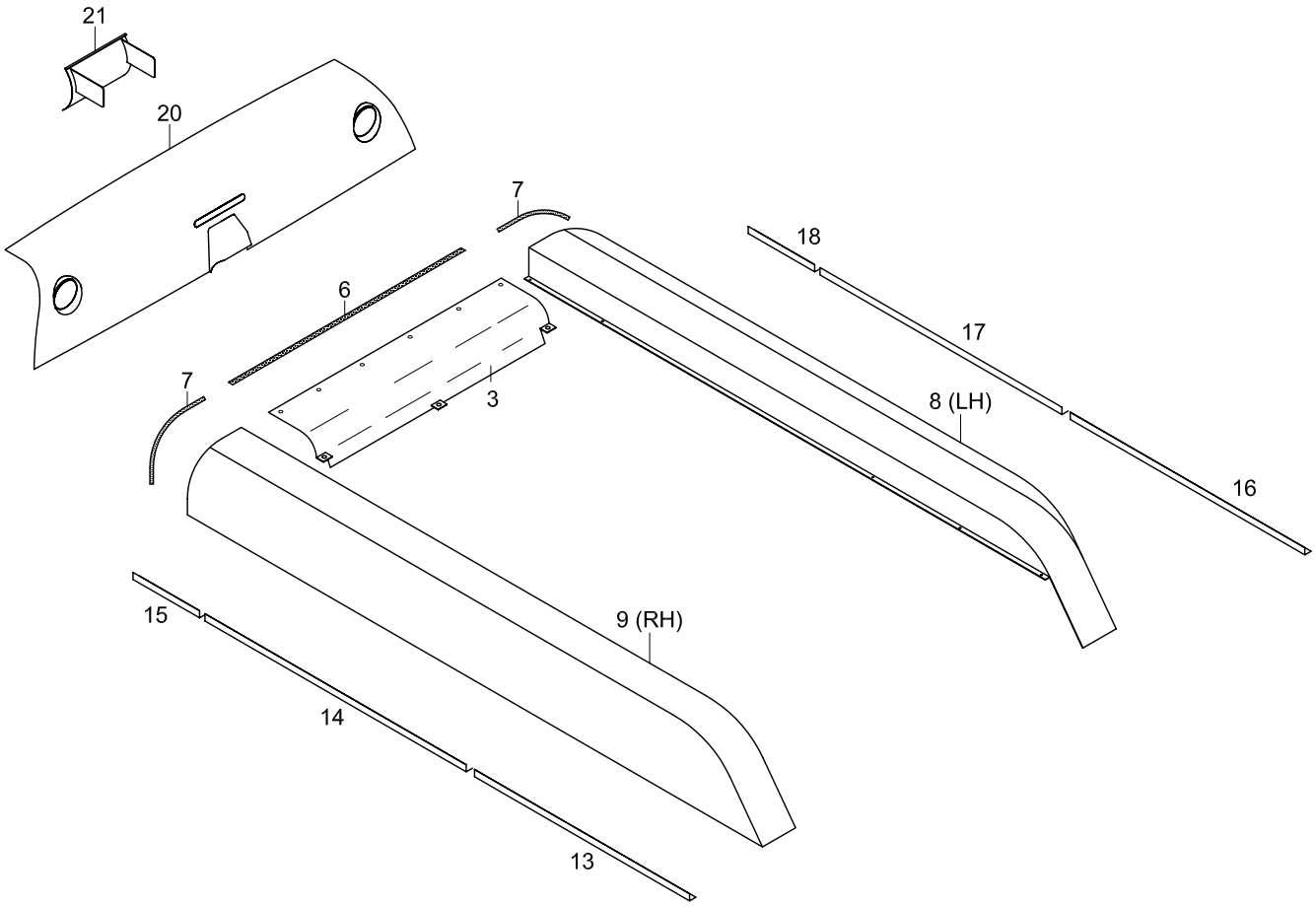

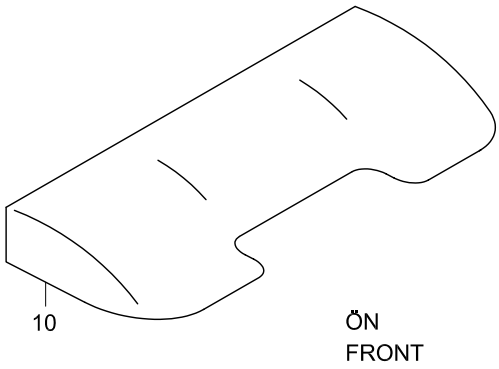

TEMSA	Klima tavan üstü yan panelleri - Slovenya A/C roof panel, side - Slovenia Seitenpaneele für Deckenklima	62310-94000-70/ 62310-97150-72/75-62201-90240-70 Vehicle Model: TB162Z - TB163Z	31-053 RevDate: Page: 1

Pos	Part Number	Turkish	English	German	Qty	R/P	From	Up To	Original Number Supplier
1	62310-94000-01Y	PANEL SOL	PANEL LH		1		1		BSLOVENYA_01
2	62310-94000-02Y	PANEL SAĞ	PANEL RH		1		1		BSLOVENYA_01
3	62310-80160-70Y	PANEL ARKA	PANEL REAR		1		1		BSLOVENYA_02
4	62310-94000-03Y	ÇITA SOL	PLATE LH		1		1		BSLOVENYA_01
5	62310-94000-04Y	ÇITA SAĞ	PLATE RH		1		1		BSLOVENYA_01
6	TC258526-01Y	FİTİL	WEATHER STRIP		mt		1		BSLOVENYA_02
7	TC258526-01Y	FİTİL	WEATHER STRIP		mt		1		BSLOVENYA_02
8	62310-97150-01Y	PANEL SOL	PANEL LH		1		1		BSLOVENYA_02
9	62310-97150-02Y	PANEL SAĞ	PANEL RH		1		1		BSLOVENYA_02
10	62310-97150-04Y	ÖN PANEL	FRONT PANEL		1		1		BSLOVENYA_01
11	62310-94000-06Y	SOL PANEL	PANEL -LH		1		1		BSLOVENYA_01
12	62310-94000-07Y	SAĞ PANEL	PANEL -RH		1		1		BSLOVENYA_01
13	62310-97150-61Y	ÇITA SOL	PLATE LH		1		1		BSLOVENYA_02
14	62310-97150-62Y	ÇITA SOL	PLATE LH		1		1		BSLOVENYA_02
15	62310-97150-63Y	ÇITA SOL	PLATE LH		1		1		BSLOVENYA_02
16	62310-97150-64Y	ÇITA SAĞ	PLATE RH		1		1		BSLOVENYA_02
17	62310-97150-65Y	ÇITA SAĞ	PLATE RH		1		1		BSLOVENYA_02
18	62310-97150-66Y	ÇITA SAĞ	PLATE RH		1		1		BSLOVENYA_02
20	62201-90050-70AY	ARKA PANEL	REAR SPOILER		1		1		BSLOVENYA_01 BSLOVENYA_02
21	62201-90240-01Y	BRAKET	BRACKET		1		1		BSLOVENYA_01 BSLOVENYA_02

TEMSA	Tavan havalandırma (acil çıkış) Roof ventilation (emergency exit)	Group No : 31-060 Draw. Num. : x Rev. Date : Page : 1
	Vehicle Model: TB162W, TB162Z, TB162X, TB162Y, TB163W, TB163Z, TB163X, TB163Y	

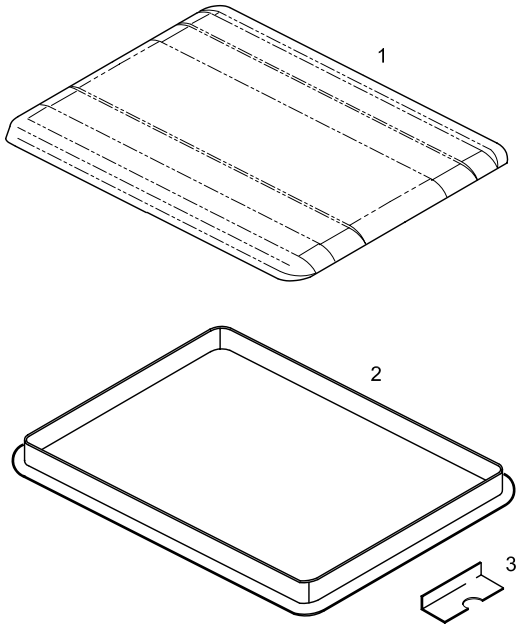

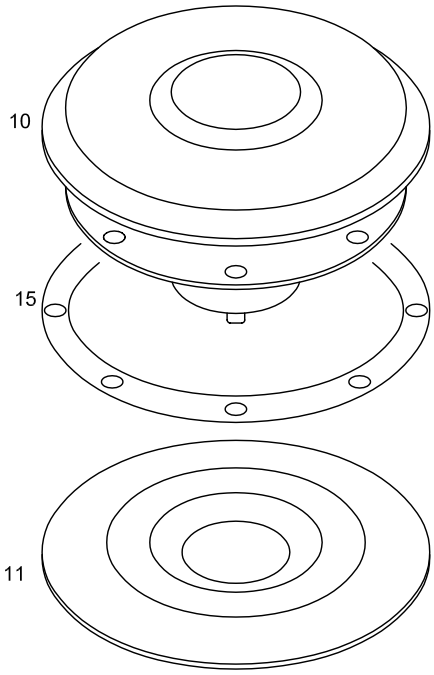

TEMSA	Tavan havalandırma (acil çıkış) ve motor fan Emergency exit & motor fan	Drw.no 62115 Vehicle Model: **TB162W, TB162Z, TB162X, TB162Y** **TB163W, TB163Z, TB163X, TB163Y**	**31-060** RevDate: Page: 1

Pos	Part Number	Turkish	English	German	Qty	R/P	From	Up To	Original Number Supplier
1	TU190100	TAVAN HAVALANDIRMA KOMP	VENTILATION ASSY ROOF		2		1	181004	CM3QW400TE PARABUS
1	TU190100Y	TAVAN HAVALANDIRMA KOMP	VENTILATION ASSY ROOF		2		181004		
2	4580072275	ÇERÇEVE	HATCH FRAME		2		1	181004	4580072275 ELLAMP
2	TU190001Y	ÇERÇEVE	HATCH FRAME		2		181004		
3	TU190002Y	L-PLAKA	PLATE-L		1		181004		
10	62121-60030-70Y	MOTOR FAN	MOTOR FAN		2		1		
11	62121-60050-71Y	KAPAK	COVER		2		1		
15	62121-60020-08Y	CONTA	O-RING		2		1		

TEMSA	Lastik, jant ve jant kapağı Tire, Rim & Wheel Cover Disc Reifen, Felge und Felgendeckel	Group No : 31-070 Draw. Num. : x Rev. Date : Page : 1
	Vehicle Model: TB162W, TB162Z, TB162X, TB162Y, TB163W, TB163Z, TB163X, TB163Y	

FRONT
VORDER

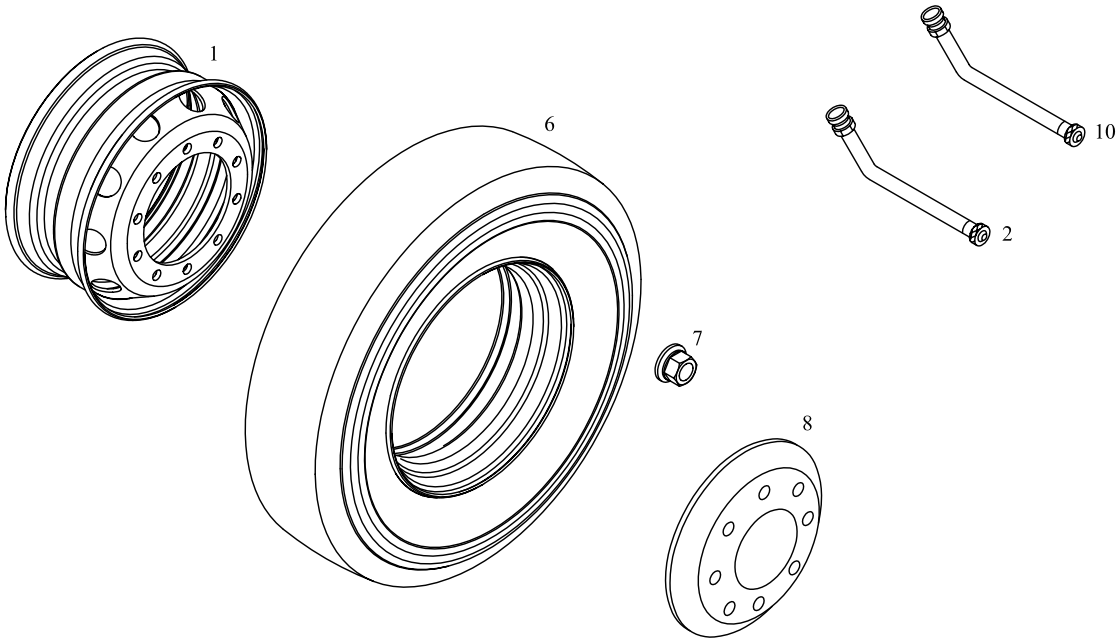

REAR
HINTER

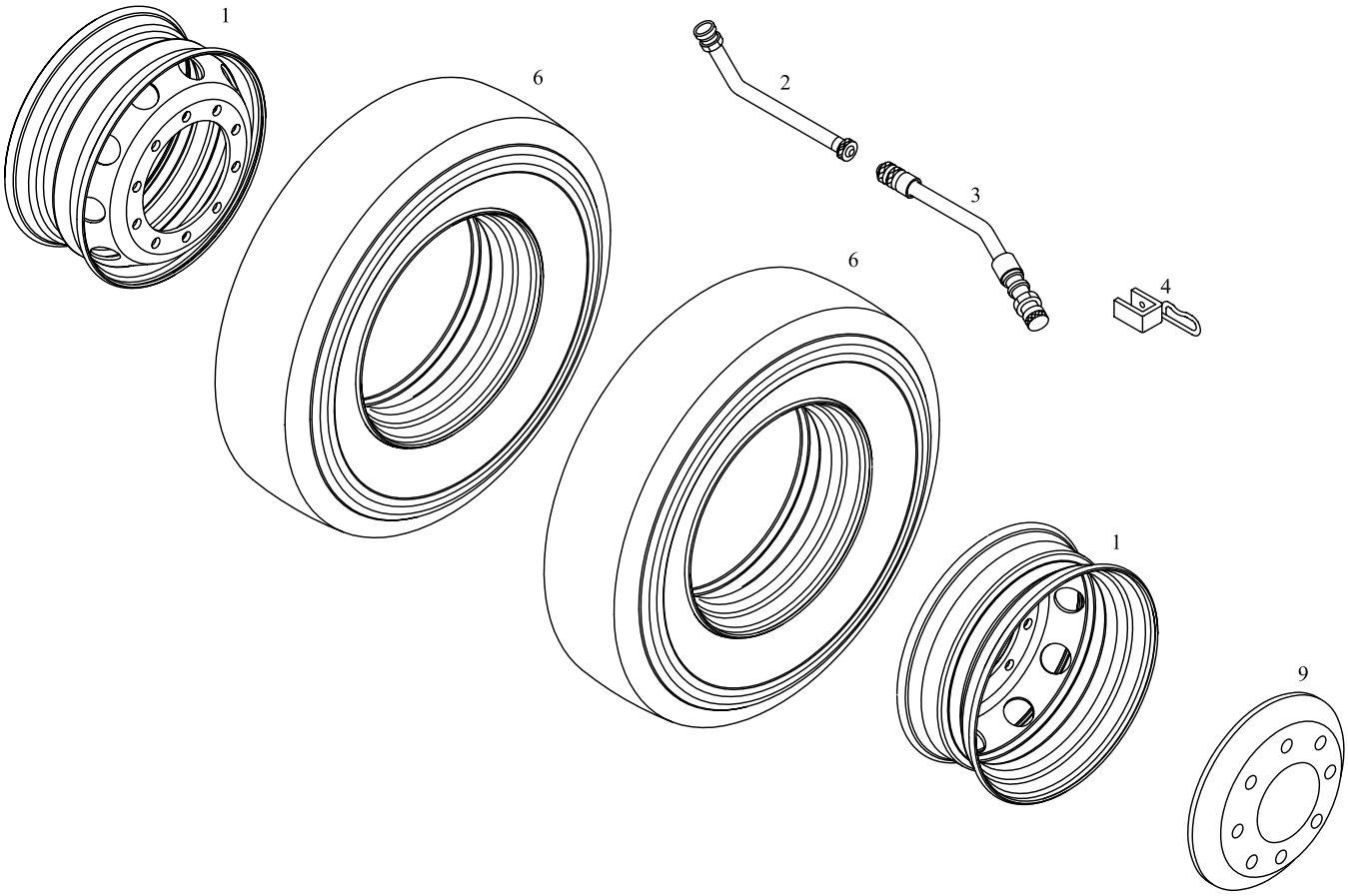

TEMSA	Lastik, jant ve jant kapağı Tire, rim & wheel cover disc Reifen, Felge und Felgendeckel	Drw.no: Vehicle Model: **TB162W, TB162Z, TB162X, TB162Y** **TB163W, TB163Z, TB163X, TB163Y**	**31-070** RevDate: Page: 1

Pos	Part Number	Turkish	English	German	Qty	R/P	From	Up To	Original Number Supplier
1	TC808776-40Y	JANT KOMPLESİ	WHEEL ASSY		7		1	161003	JANTAŞ
1	TC808776-50Y	JANT KOMPLESİ	WHEEL ASSY		7		1		TEKERSAN
1	TC808776-60Y	JANT KOMPLESİ	WHEEL ASSY		7		1	161003	UZEL
1	TC808776-41Y	JANT KOMPLESİ	WHEEL ASSY		7		161003		
2	TC771905-20Y	SUBAB	SUBAB		5		1		
3	TC771905-30Y	UZATMA HORTUMU	EXTENSION HOSE		2		1		
4	TC771905-40Y	TUTUCU	HOLDING BAR		2		1		
6	MC090065Y	LASTİK	TIRE		7		1		295/80R22.5 R22.5
7	81.45503-0049	BİJON SOMUNU	NUT WHEEL		40		1		MAN
8	TC303100Y	ÖN JANT KAPAĞI	WHEEL COVER DISC FRONT		2		1		
9	TC303101Y	ARKA JANT KAPAĞI	WHEEL COVER DISC REAR		2		1		
10	TC771905-25Y	SUBAB	SUBAB		2		1		

TEMSA	Yedek lastik taşıyıcı Spare Tire Carrier Reserveradträger	Group No : 31-080 Draw. Num. : x Rev. Date : Page : 1
	Vehicle Model: TB162W, TB162Z, TB162X, TB162Y, TB163W, TB163Z, TB163X, TB163Y	

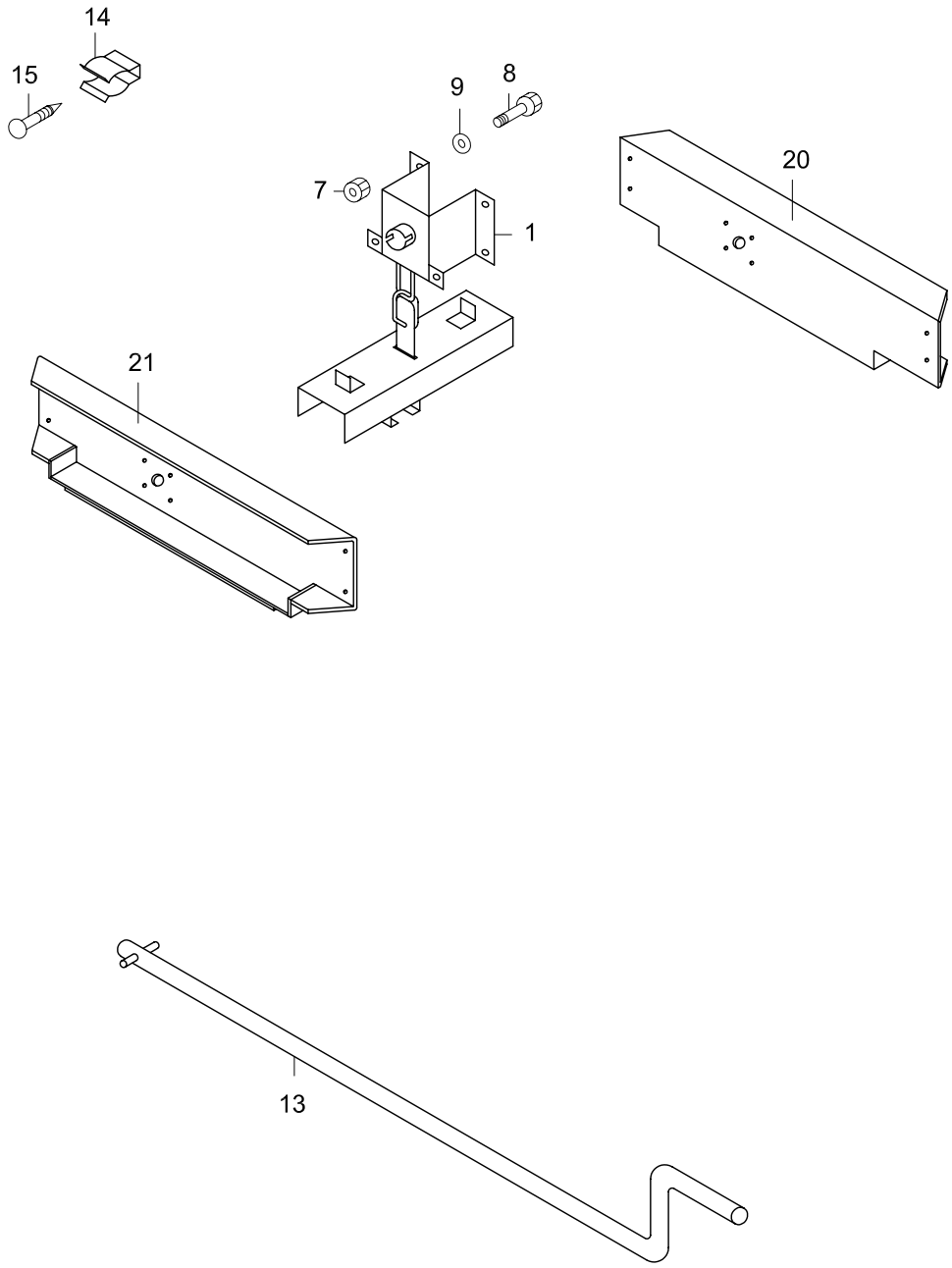

TEMSA	Yedek lastik taşıyıcı Spare tire carrier Reserveradträger	Drw.no: Vehicle Model: TB162W, TB162Z, TB162X, TB162Y TB163W, TB163Z, TB163X, TB163Y	31-080 RevDate: Page: 1

Pos	Part Number	Turkish	English	German	Qty	R/P	From	Up To	Original Number Supplier
1	MC373935AX	YEDEK LASTİK TAŞIYICI	CARRIER ASSY SPARE TIRE		1		1		
7	MF430007Y	SOMUN	NUT		AR		1		
8	MF101312Y	CIVATA	BOLT		AR		1		
9	MF450407Y	RONDELA	WASHER SPRING		AR		1		
13	MC373935AY	KRANK KOLU	HANDLE CRANK		1		1		
14	MT101224Y	YAY	SPRING		3		1		
15	MF453015Y	VİDA	SCREW		AR		1		
20	61301-92120-06Y	YEDEK LASTİK TAŞIYICI BRAKETİ	BRACKET, SPARE TYRE CARRIER		1		1		
21	61301-92120-07Y	YEDEK LASTİK TAŞIYICI BRAKETİ	BRACKET, SPARE TYRE CARRIER		1		1		

TEMSA	Çamurluk ve tozluk Mud guard and splash x	Group No : 31-090 Draw. Num. : x Rev. Date : Page : 1
	Vehicle Model: TB162W, TB162Z, TB162X, TB162Y, TB163W, TB163Z, TB163X, TB163Y	

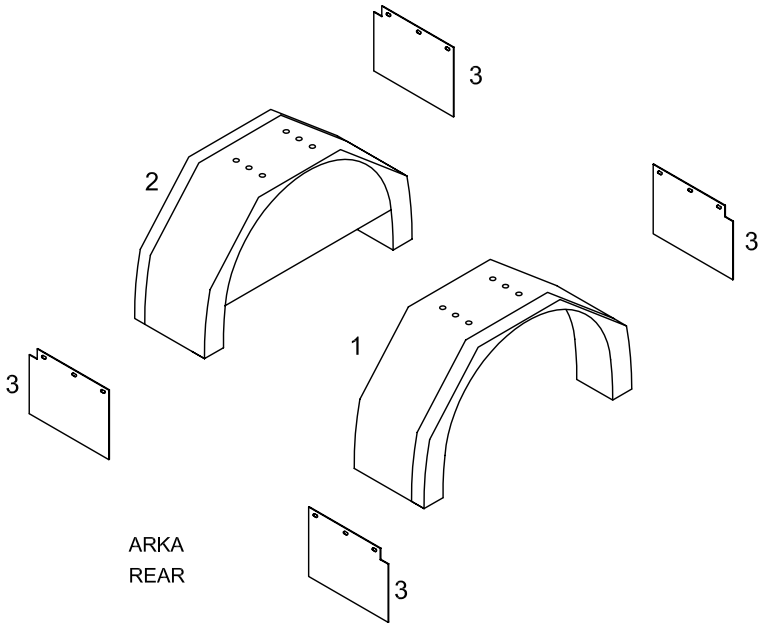

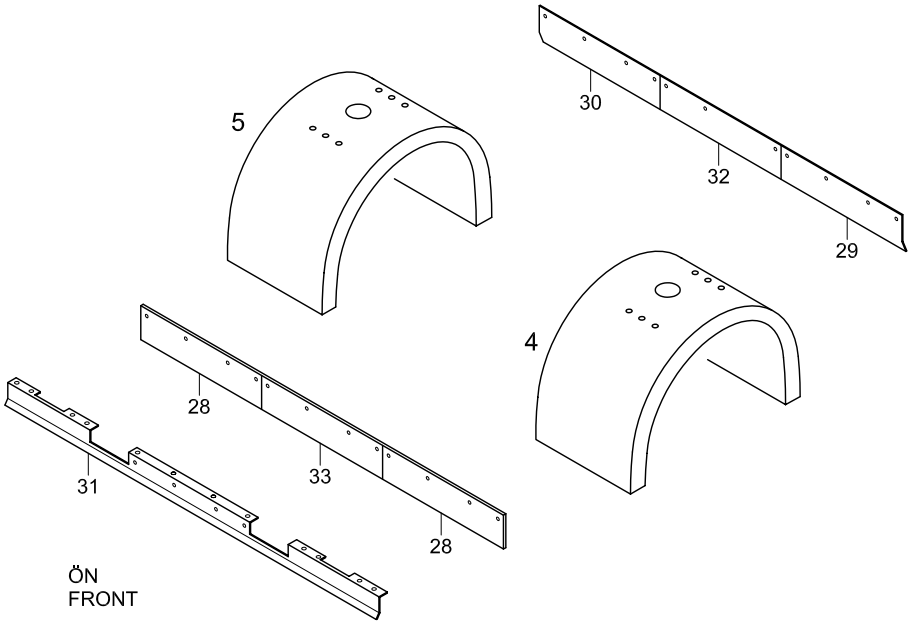

TEMSA	Çamurluk ve tozluk Mud guard and splash	Drw.no: Vehicle Model: TB162W, TB162Z, TB162X, TB162Y TB163W, TB163Z, TB163X, TB163Y	31-090 RevDate: Page: 1

Pos	Part Number	Turkish	English	German	Qty	R/P	From	Up To	Original Number Supplier
1	61704-94000-03Y	ÇAMURLUK -ARKA SOL	MUD GUARD- REAR LH		1		1		
2	61704-94000-04Y	ÇAMURLUK ARKA SAĞ	MUD GUARD REAR RH		1		1		
3	61704-94000-08Y	TOZLUK LASTİĞİ	RUBBER GUARD SPLASH		4		1		
4	61704-94000-05Y	ÇAMURLUK -ARKA SOL	MUD GUARD- REAR LH		1		1		
5	61704-94000-06Y	ÇAMURLUK ARKA SAĞ	MUD GUARD REAR RH		1		1		
28	TC253034Y	TOZLUK LASTİĞİ	RUBBER GUARD SPLASH		2		1		
29	TC253032Y	ÇAMURLUK	GUARD SPLASH		1		1		
30	TC253033Y	ÇAMURLUK	GUARD SPLASH		1		1		
31	61704-90710-00AY	DESTEK	SUPPORT		1		1		
32	TC253031Y	DESTEK	SUPPORT		1		1		
33	TC253028Y	TOZLUK LASTİĞİ	RUBBER MUD GUARD		1		1		

TEMSA	Etiket Label x	Group No : 31-100 Draw. Num. : x Rev. Date : Page : 1
	Vehicle Model: TB162W, TB162Z, TB162X, TB162Y, TB163W, TB163Z, TB163X, TB163Y	

6 TEMSA

3 TEMSA

2 SAFARİ

7 Safari

5

1 SAFARİ

4

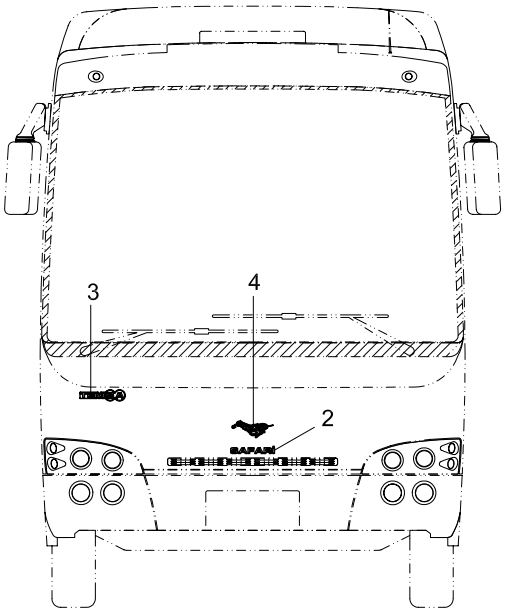

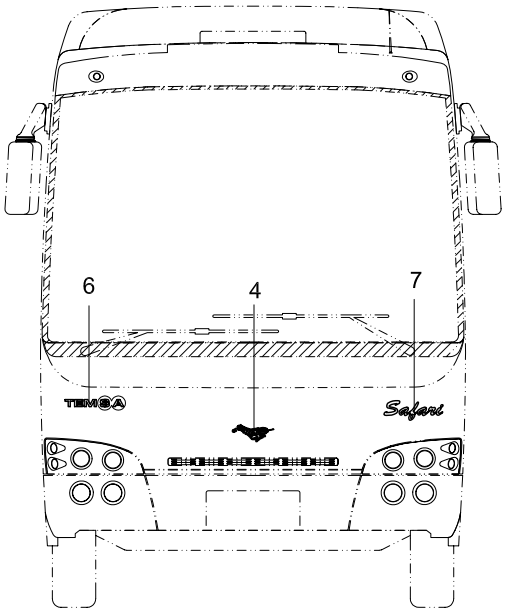

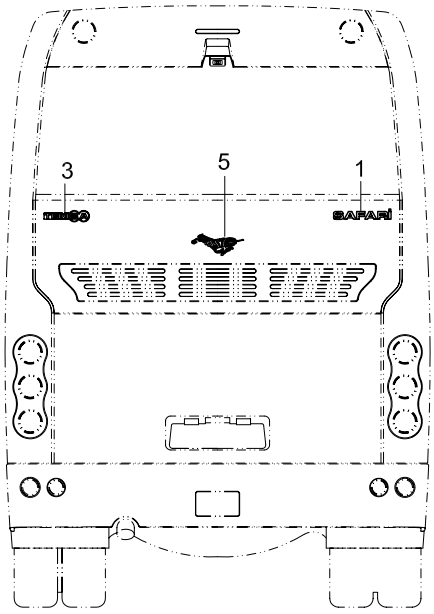

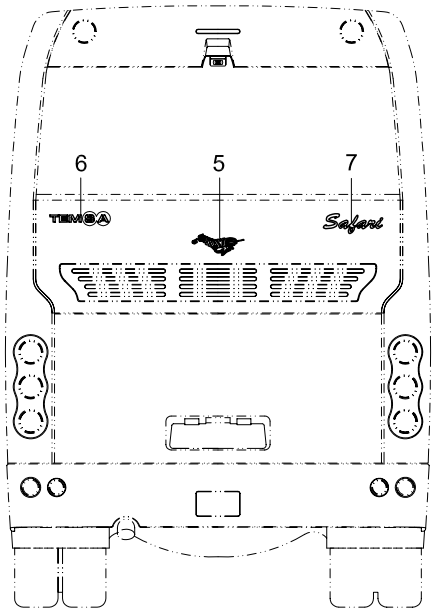

TEMSA	Etiket Label	Drw.no: Vehicle Model: **TB162W, TB162Z, TB162X, TB162Y** **TB163W, TB163Z, TB163X, TB163Y**	**31-100** RevDate: Page: 1

Pos	Part Number	Turkish	English	German	Qty	R/P	From	Up To	Original Number Supplier
1	TC350173Y	SAFARİ LOGOSU - ARKA	LABEL SAFARİ - REAR		1		1	230404	
2	TC350125Y	SAFARİ LOGOSU - ÖN	LABEL SAFARİ - FRONT		1		1	230404	
3	TU350127Y	TEMSA LOGOSU	LABEL TEMSA		2		1	230404	
4	TC399000-01Y	ZEBRA LOGOSU - ÖN	LABEL ZEBRA - FRONT		1		1		
5	TC399000-02Y	ZEBRA LOGOSU - ARKA	LABEL ZEBRA - REAR		1		1		
6	TY350139Y	TEMSA LOGOSU	LABEL TEMSA		2		230404		
7	TU350175Y	SAFARİ LOGOSU	LABEL SAFARİ - BRUSH SCRIP		2		230404		

32 İSKELET
SKELETON
x

32-010	Ön gövde Front Body x	TB162W TB163W	TB162Z TB163Z	TB162X TB163X	TB162Y TB163Y
32-020	Arka gövde Rear Body x	TB162W TB163W	TB162Z TB163Z	TB162X TB163X	TB162Y TB163Y
32-021	Arka gövde Rear Body x			TB162X TB163X	TB162Y TB163Y
32-030	Yan gövde Side Body x	TB162W TB163W	TB162Z TB163Z	TB162X TB163X	TB162Y TB163Y
32-040	Tavan Roof x	TB162W TB163W			
32-041	Tavan Roof x		TB162Z TB163Z		
32-042	Tavan Roof x			TB162X TB163X	
32-043	Tavan Roof x				TB162Y TB163Y
32-050	Yan panel Side panel x	TB162W TB163W	TB162Z TB163Z	TB162X TB163X	TB162Y TB163Y
32-070	Bagaj çerçevesi Luggage frame x	TB162W TB163W			
32-071	Bagaj çerçevesi Luggage frame x			TB162X TB163X	
32-072	Bagaj çerçevesi Luggage frame x		TB162Z TB163Z		
32-073	Bagaj çerçevesi Luggage frame x				TB162Y TB163Y

TEMSA	Ön gövde Front Body Vordere Körper	Group No : 32-010 Draw. Num. : x Rev. Date : Page : 1
	Vehicle Model: TB162W, TB162Z, TB162X, TB162Y, TB163W, TB163Z, TB163X, TB163Y	

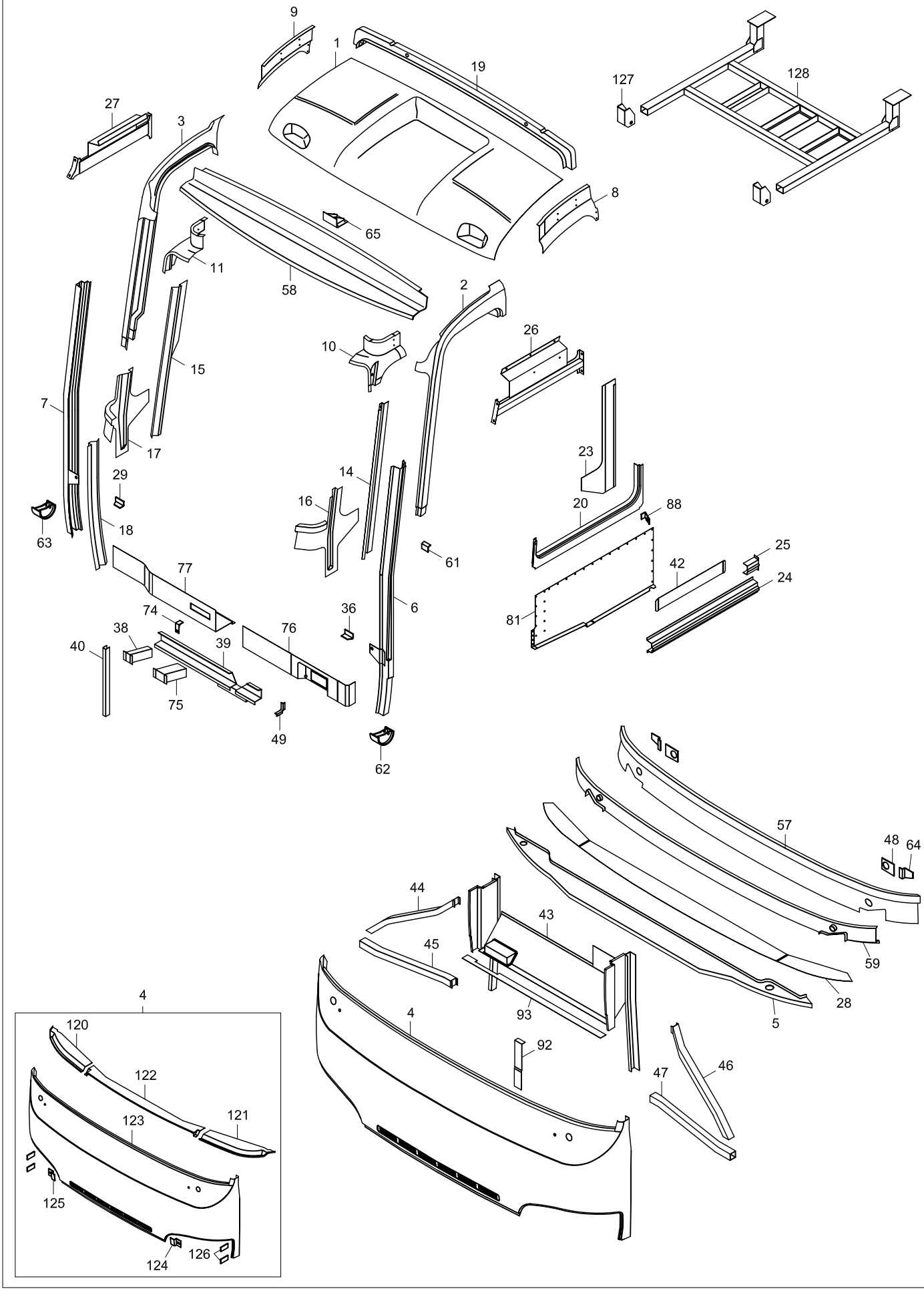

TEMSA	Ön gövde Front Body Vordere Körper	Group No : 32-010 Draw. Num. : x Rev. Date :
	Vehicle Model: TB162W, TB162Z, TB162X, TB162Y, TB163W, TB163Z, TB163X, TB163Y	Page : 2

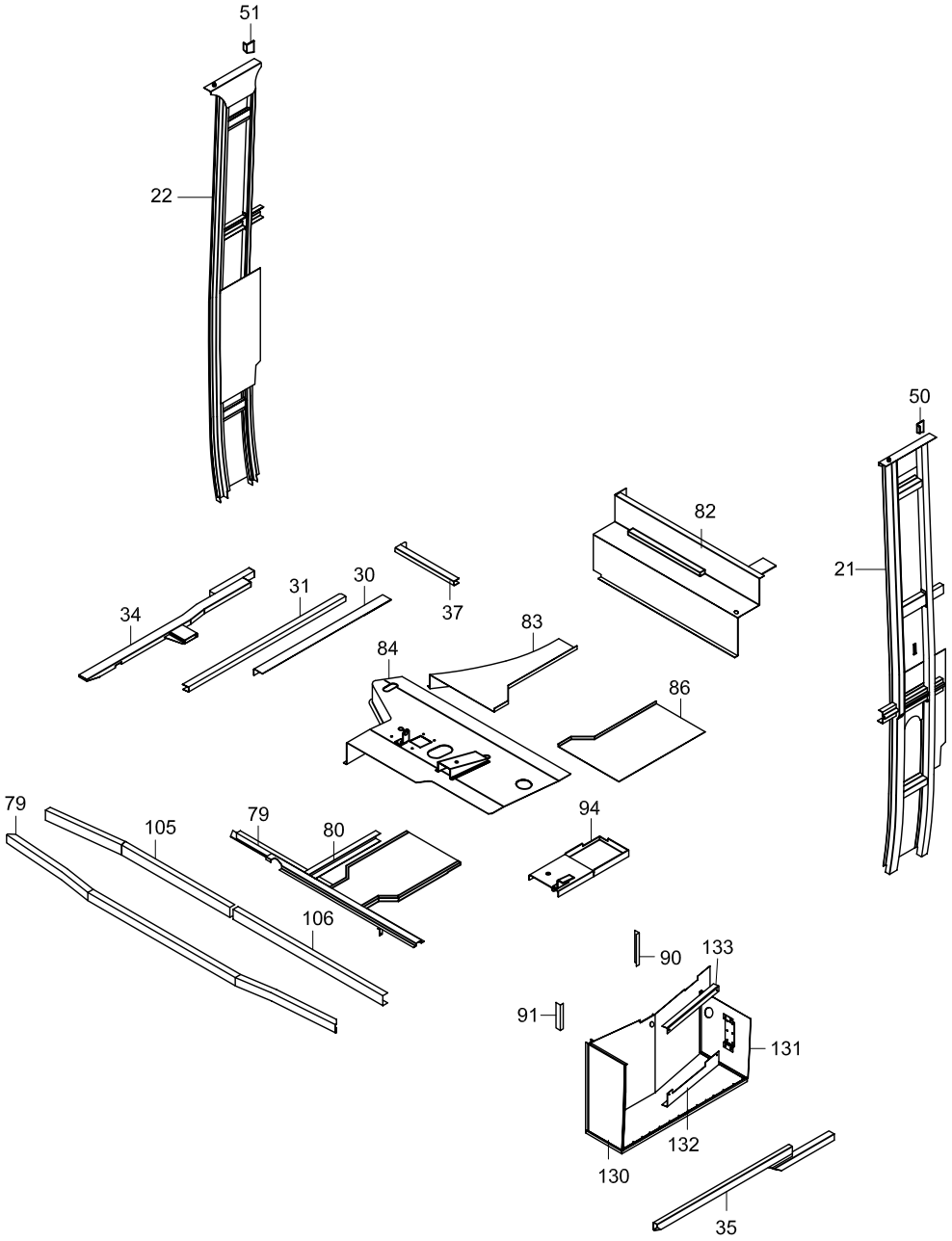

140

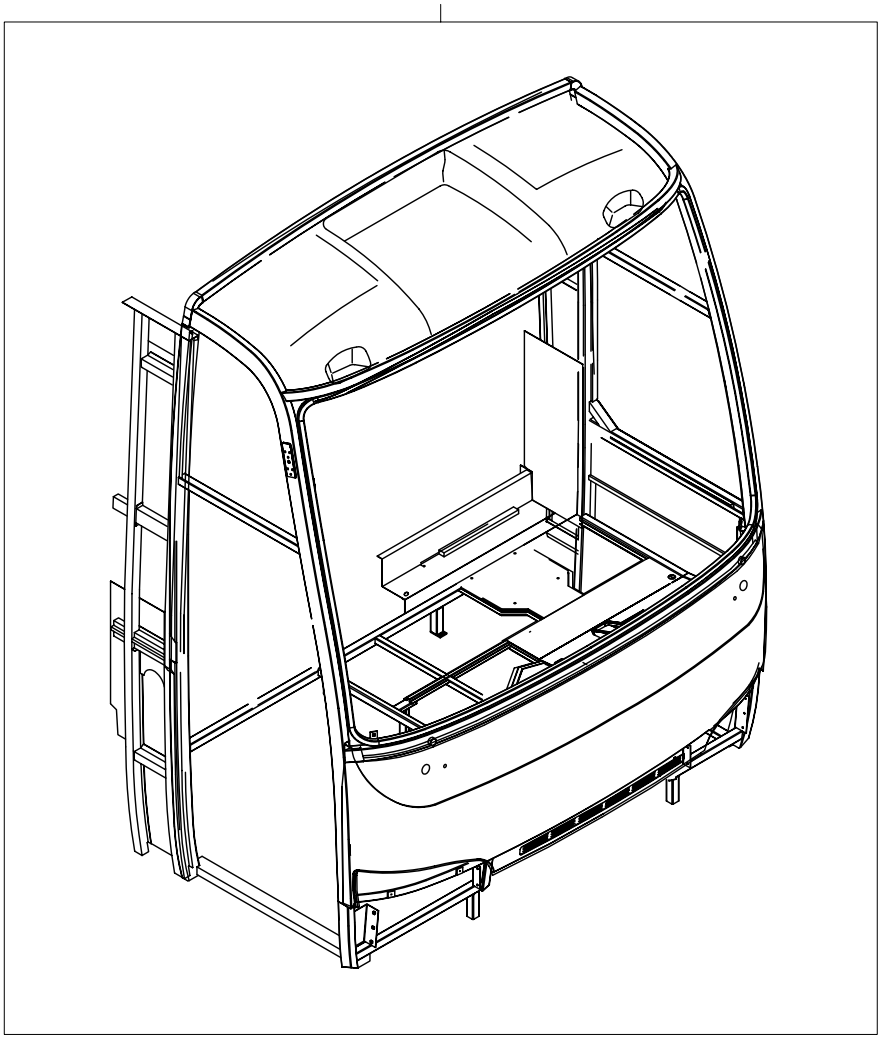

TEMSA	Ön gövde Front body Vordere Körper	Drw.no: Vehicle Model: TB162W, TB162Z, TB162X, TB162Y TB163W, TB163Z, TB163X, TB163Y	32-010 RevDate: Page: 1

Pos	Part Number	Turkish	English	German	Qty	R/P	From	Up To	Original Number Supplier
1	TC257496-01AX	ÖN TAVAN	PANEL FRONT ROOF		1		1		
2	TC257492-02X	DİREK NO.1 ÜST SOL	PILLAR NO.1 UPR LH		1		1		
3	TC257488-03X	DİREK NO.1 ÜST SAĞ	PILLAR NO.1 UPR RH		1		1		
4	TC257145-80X	ÖN PANEL	PANEL FRONT		1		1	?	
4	TC257145-81X	ÖN PANEL	PANEL FRONT		1		?		
5	62013-60940-70HX	DESTEK	STIFFENER		1		1		
6	TC272540X	ORTA DİREK NO.1 SOL	PILLAR NO.1 LH		1		1		
7	TC272539X	ORTA DİREK NO.1 SAĞ	PILLAR NO.1 RH		1		1		
8	TC257194X	ÖN TAV. İÇ PANELİ SOL	PANEL INR. FR ROOF LH		1		1		
9	TC257193X	ÖN TAV. İÇ PANELİ SAĞ	PANEL INR. FR ROOF RH		1		1		
10	TC257498X	TAVAN İÇ KÖŞE PAN SOL	PANEL INR. CORNER LH		1		1		
11	TC257497X	TAVAN İÇ KÖŞE PAN SAĞ	PANEL INR. CORNER RH		1		1		
14	TC272543X	DİREK İÇ PANELİ SOL	PANEL INNER LH		1		1		
15	TC272542X	DİREK İÇ PANELİ SAĞ	PANEL INNER RH		1		1		
16	TC258695X	ALT İÇ PANEL SOL	PANEL INNER LH		1		1		
17	TC258694X	ALT İÇ PANEL SAĞ	PANEL INNER RH		1		1		
18	TC256970X	DİREK ALT İÇ PANELSAĞ	PANEL INNER RH		1		1		
19	62013-96640-70X	TAVAN KUŞAĞI	ROOF BOW		1		1		
20	TC272538X	DESTEK	STIFFENER		1		1		
21	62013-96100-70X	DİREK NO.2 SOL	PILLAR ASSY NO.2 LH		1		1		
21	62013-96100-72X	DİREK NO.2 SOL	PILLAR ASSY NO.2 LH		1		1		R66 TYPE
22	62013-96100-71X	DİREK NO.2 SAĞ	PILLAR ASSY NO.2 RH		1		1		
22	62013-96100-73X	DİREK NO.2 SAĞ	PILLAR ASSY NO.2 RH		1		1		R66 TYPE
23	TC272545X	İÇ YAN PANEL SOL	PANEL INNER LH		1		1		
24	63109-10010-03X	DESTEK	STIFFENER		1		1		
25	62013-40970-00X	DESTEK	GUSSET		1		1		
26	62013-90100-01X	TAKVİYE SOL	STIFFENER LH		1		1		
27	62013-90100-02X	TAKVİYE SAĞ	STIFFENER RH		1		1		
28	62017-80690-70X	GÖSTERGE PANELİ	PANEL INSTRUMENT		1		1		
29	MC254863X	DESTEK	GUSSET		1		1		
30	62013-96000-38X	EŞİK	SILL		1		1		
31	62013-96000-41X	EŞİK	SILL		1		1		
34	62013-92016-45X	EŞİK	MEMBER		1		1		
35	62013-92016-46X	SOL ALT DESTEK	RAIL SKIRT - LH		1		1		
36	MC254864X	DESTEK	GUSSET		1		1		

TEMSA	Ön gövde Front body Vordere Körper	Drw.no: Vehicle Model: TB162W, TB162Z, TB162X, TB162Y TB163W, TB163Z, TB163X, TB163Y	32-010 RevDate: Page: 2

Pos	Part Number	Turkish	English	German	Qty	R/P	From	Up To	Original Number Supplier
37	62013-92016-48X	DESTEK	SILL		1		1		
38	MC255121X	BRAKET	BRACKET		1		1		
39	62013-91250-80X	DESTEK	STIFFENER		1		1		
40	MC255157-01X	TAKVİYE	REINFORCEMENT		1		1		
42	MC254848X	PLAKA	PLATE		1		1		
43	TC256985-71AX	KUTU	BOX ASSY DESTINATION		1		1		
44	TC272811-01X	DESTEK	SILL		1		1		
45	TC256989X	DESTEK	SILL		1		1		
46	TC272812X	DESTEK	SILL		1		1		
47	TC256987X	DESTEK	SILL		1		1		
48	62013-61260-00X	PLAKA	PLATE		2		1		
49	MC255123X	DESTEK	SILL		1		1		
50	62013-40980-01X	DESTEK SOL	GUSSET LH		1		1		
51	62013-40980-02X	DESTEK SAĞ	GUSSET RH		1		1		
57	62013-41220-70X	İÇ PANEL	PANEL INNER		1		1		
58	MC272544X	ÖN TAVAN İÇ PANELİ	PANEL INNER FR. ROOF		1		1		
59	62013-41230-70X	DESTEK	STIFFENER		1		1		
61	MC256971X	L-PLAKA	PLATE-L		1		1		
62	62013-70000-87X	TAKOZ - SOL	STOPPER - LH		1		1	?	
62	62013-94010-88X	TAKOZ - SOL	STOPPER - LH		1		?		
63	62013-80010-88X	TAKOZ - SAĞ	STOPPER - RH		1		1		
64	62013-60130-00X	Z-PLAKA	PLATE-Z		2		1		
65	62013-70017-01X	AYNA BRAKETİ	BRACKET, MIRROR		1		1		
74	TC337507X	BRAKET	BRACKET		1		1		
75	MC255026X	BRAKET	BRACKET		1		1		
76	62013-80150-70X	EŞİK	MEMBER		1		1		
77	62013-80160-70X	EŞİK	MEMBER		1		1		
79	62013-96200-70AX	DESTEK	SUPPORT		1		1		
80	62013-96120-71AX	DESTEK	SUPPORT		1		1		
81	62013-90100-70AX	DESTEK	SUPPORT		1		1		
82	62013-96130-70X	PANEL	PANEL		1		1		
83	62013-96000-124X	PANEL	PANEL		1		1		
84	62013-90140-70X	PANEL	PANEL		1		1		MANUAL TM
84	62013-90140-71X	PANEL	PANEL		1		1		AUTOMATIC TM
86	62013-90130-02BX	PANEL	PANEL		1		1		

TEMSA	Ön gövde Front body Vordere Körper	Drw.no: Vehicle Model: TB162W, TB162Z, TB162X, TB162Y TB163W, TB163Z, TB163X, TB163Y	32-010 RevDate: Page: 3

Pos	Part Number	Turkish	English	German	Qty	R/P	From	Up To	Original Number Supplier
88	62013-92016-129X	L-PLAKA	PLATE-L		1		1		
90	62013-90190-02X	PLAKA	PLATE		1		1		
91	62013-90190-03X	PLAKA	PLATE		1		1		
92	62013-80180-01X	BRAKET	BRACKET		1		1		
93	62013-80180-02X	PLAKA	PLATE		1		1		
94	62013-80230-70X	DEBRİYAJ BRAKETİ	BRACKET, CLUTCH		1		1		
105	62013-90100-05X	TABAN DESTEĞİ	SILL		1		1		
106	62013-90100-06X	TABAN DESTEĞİ	SILL		1		1		
120	MC256947X	DESTEK	STIFFENER		1		1		
121	MC256948X	DESTEK	STIFFENER		1		1		
122	TC256949X	DESTEK	STIFFENER		1		1		
123	TC272541-80BX	ÖN PANEL	PANEL FRONT		1		1		
124	TC257145-11X	Z-PLAKA	PLATE-Z		1		1		
125	TC257145-12X	Z-PLAKA	PLATE-Z		1		1		
126	TC257145-10X	PLAKA	PLATE		4		1		
127	62013-70300-00X	BRAKET	BRACKET		2		1		
128	62013-80310-70AX	BRAKET KOMP	BRACKET ASSY		1		1		
130	62013-92116-70X	ÖN SOL BAGAJ	LUGGAGE FRONT LH		1		1		
131	62013-92116-02X	PANEL	PANEL		1		1		
132	62013-90170-03X	PLAKA	PLATE		1		1		
133	62013-90170-04X	PLAKA	PLATE		1		1		
140	62013-96000-71Y	ÖN GÖVDE KOMPLE MANUAL ŞANZUMAN	FRONT BODY ASSY MANUAL TRANSMISSION		1				BM01&OZEL16V
140	62013-96000-73Y	ÖN GÖVDE KOMPLE MANUAL ŞANZUMAN	FRONT BODY ASSY MANUAL TRANSMISSION		1				BM01&OZEL16Y R66 TYPE
140	62013-96000-72Y	ÖN GÖVDE KOMPLE OTOMATİK ŞANZUMAN	FRONT BODY ASSY AUTOMATIC TRANSMISSON		1				BA01&OZEL16V
140	62013-96000-74Y	ÖN GÖVDE KOMPLE OTOMATİK ŞANZUMAN	FRONT BODY ASSY AUTOMATIC TRANSMISSON		1				BA01&OZEL16Y R66 TYPE

TEMSA	Arka gövde Rear Body Hintere Körper	Group No : 32-020 Draw. Num. : x Rev. Date : Page : 1
	Vehicle Model: TB162W, TB162Z, TB163W, TB163Z,	

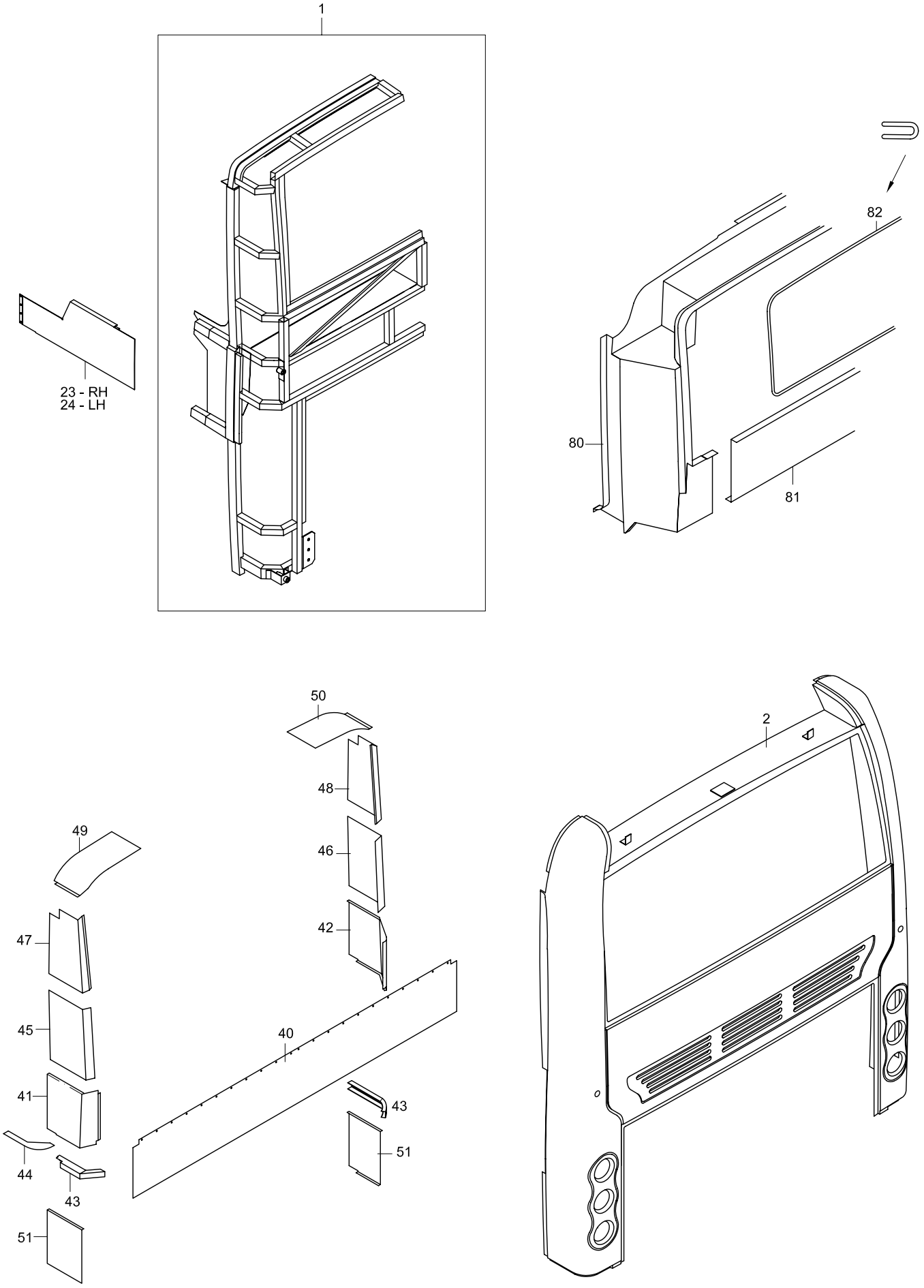

TEMSA	Arka gövde Rear body	Drw.no: 61504-90040-70/90016-71/62309-96127-71 Vehicle Model: **TB162W, TB162Z, TB162X, TB162Y** **TB163W, TB163Z, TB163X, TB163Y**	**32-020** RevDate: Page: 1

Pos	Part Number	Turkish	English	German	Qty	R/P	From	Up To	Original Number Supplier
1	62201-96010-71Y	ARKA GÖVDE KOMPLE	REAR BODY ASSY		1		1		BOZEL16-R66-YOK
1	62031-92066-91Y	ARKA GÖVDE KOMPLE	REAR BODY ASSY		1		170205		BOZEL16-R66-VAR
2	62201-90020-70DY	ARKA DIŞ PANEL	REAR PANEL OUTER		1		1		
23	62201-90040-71Y	TAKVİYE SAĞ	SUPPORT RH		1		1		
24	62201-90040-70Y	TAKVİYE SOL	SUPPORT LH		1		1		
40	62201-90080-01BY	PANEL	PANEL		1		1		
41	62201-90080-02Y	PANEL SAĞ	PANEL RH		1		1		
42	62201-90080-03Y	PANEL SOL	PANEL LH		1		1		
43	62201-90080-04Y	TAKVİYE	STIFFENER		2		1		
44	62201-90080-12Y	SAC	SHEET		2		1		
45	62201-90080-15Y	İÇ PANEL	PANEL INNER		1		1		
46	62201-90080-16Y	İÇ PANEL	PANEL INNER		1		1		
47	62201-90080-17Y	İÇ PANEL	PANEL INNER		1		1		
48	62201-90080-18Y	İÇ PANEL	PANEL INNER		1		1		
49	62201-90080-19Y	İÇ PANEL	PANEL INNER		1		1		
50	62201-90080-20Y	İÇ PANEL	PANEL INNER		1		1		
51	62201-90010-39Y	PANEL	PANEL		2		1		
80	62201-96090-02Y	PANEL	PANEL		1		1		BOZEL16-R66-YOK
80	62201-96090-06Y	PANEL	PANEL		1		170205		BOZEL16-R66-VAR
81	62201-90090-01Y	PANEL	PANEL		1		1		

TEMSA	Arka gövde Rear Body Hintere Körper	Group No : 32-021 Draw. Num. : x Rev. Date : Page : 1
	Vehicle Model: TB162X, TB162Y, TB163X, TB163Y	

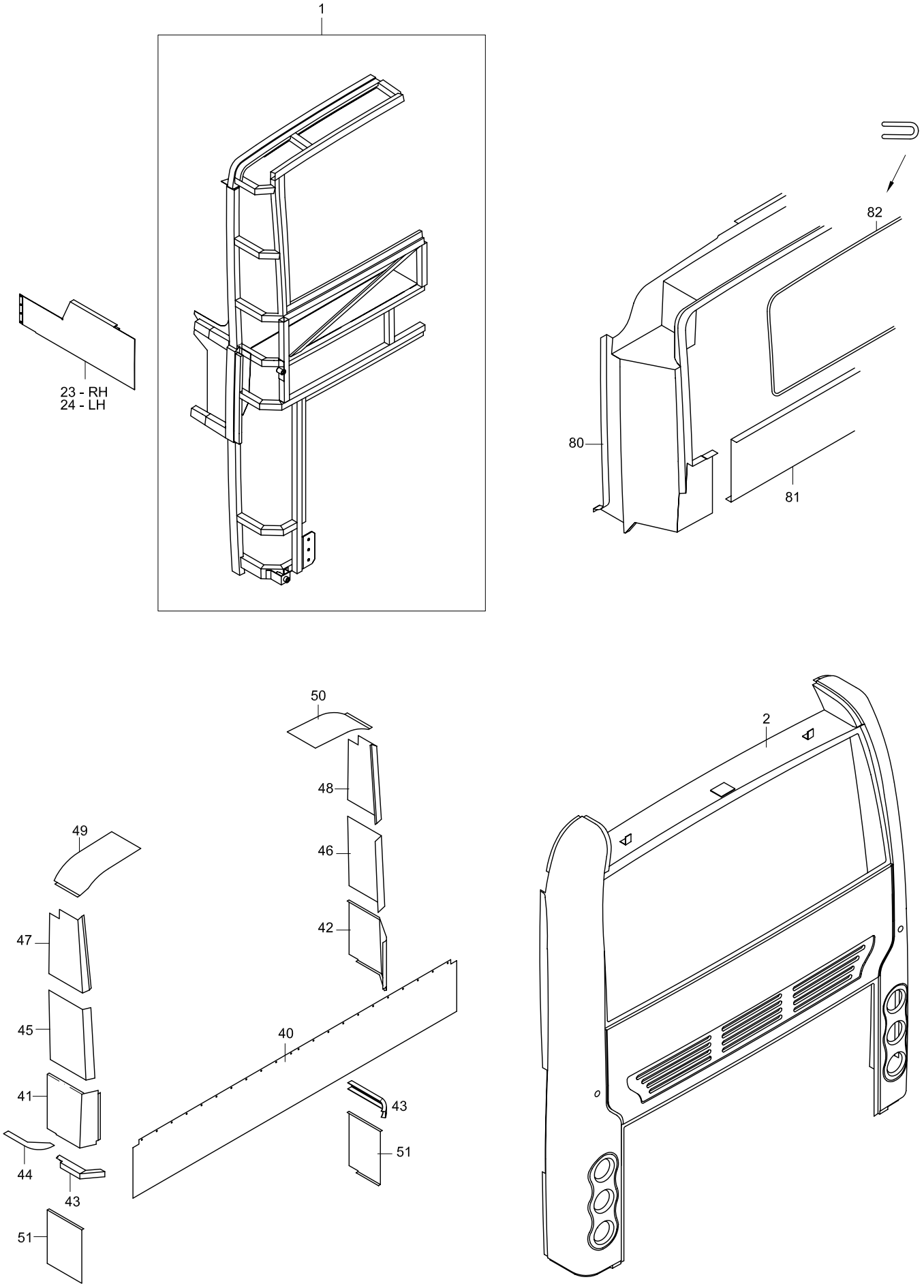

TEMSA	Arka gövde Rear body	Drw.no: Vehicle Model: **TB162X, TB162Y** **TB163X, TB163Y**	**32-021** RevDate: Page: 1

Pos	Part Number	Turkish	English	German	Qty	R/P	From	Up To	Original Number Supplier
1	62201-96010-71Y	ARKA GÖVDE KOMPLE	REAR BODY ASSY		1		1		BOZEL16-R66-YOK
1	62031-92066-91Y	ARKA GÖVDE KOMPLE	REAR BODY ASSY		1		170205		BOZEL16-R66-VAR
2	62201-90020-70DY	ARKA DIŞ PANEL	REAR PANEL OUTER		1		1		
23	62201-90040-71Y	TAKVİYE SAĞ	SUPPORT RH		1		1		
24	62201-90040-70Y	TAKVİYE SOL	SUPPORT LH		1		1		
40	62201-90080-01BY	PANEL	PANEL		1		1		
41	62201-90080-02Y	PANEL SAĞ	PANEL RH		1		1		
42	62201-90080-03Y	PANEL SOL	PANEL LH		1		1		
43	62201-90080-04Y	TAKVİYE	STIFFENER		2		1		
44	62201-90080-12Y	SAC	SHEET		2		1		
45	62201-90080-15Y	İÇ PANEL	PANEL INNER		1		1		
46	62201-90080-16Y	İÇ PANEL	PANEL INNER		1		1		
47	62201-90080-17Y	İÇ PANEL	PANEL INNER		1		1		
48	62201-90080-18Y	İÇ PANEL	PANEL INNER		1		1		
49	62201-90080-19Y	İÇ PANEL	PANEL INNER		1		1		
50	62201-90080-20Y	İÇ PANEL	PANEL INNER		1		1		
51	62201-90010-39Y	PANEL	PANEL		2		1		
80	62201-94090-02Y	PANEL	PANEL		1		1		BOZEL16-R66-YOK
80	62201-94090-06Y	PANEL	PANEL		1		170205		BOZEL16-R66-VAR
81	62201-90090-01Y	PANEL	PANEL		1		1		

TEMSA	Yan gövde Side body Seitenwand	Group No : 32-030 Draw. Num. : x Rev. Date :
	Vehicle Model: TB162W, TB163W,	Page : 1

1

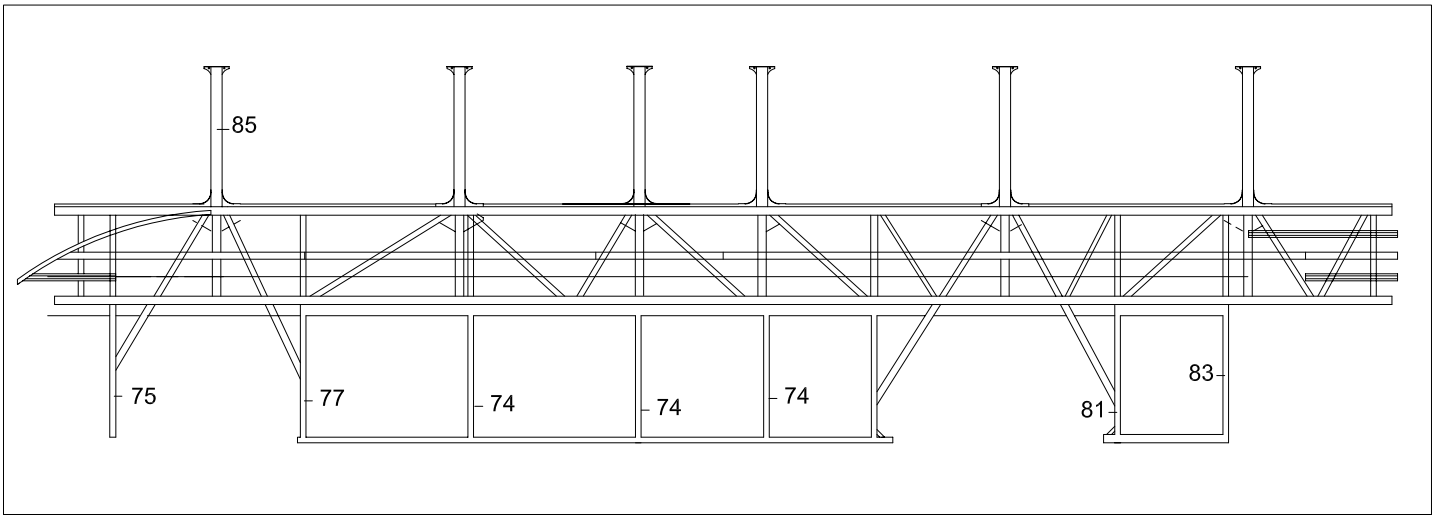

2

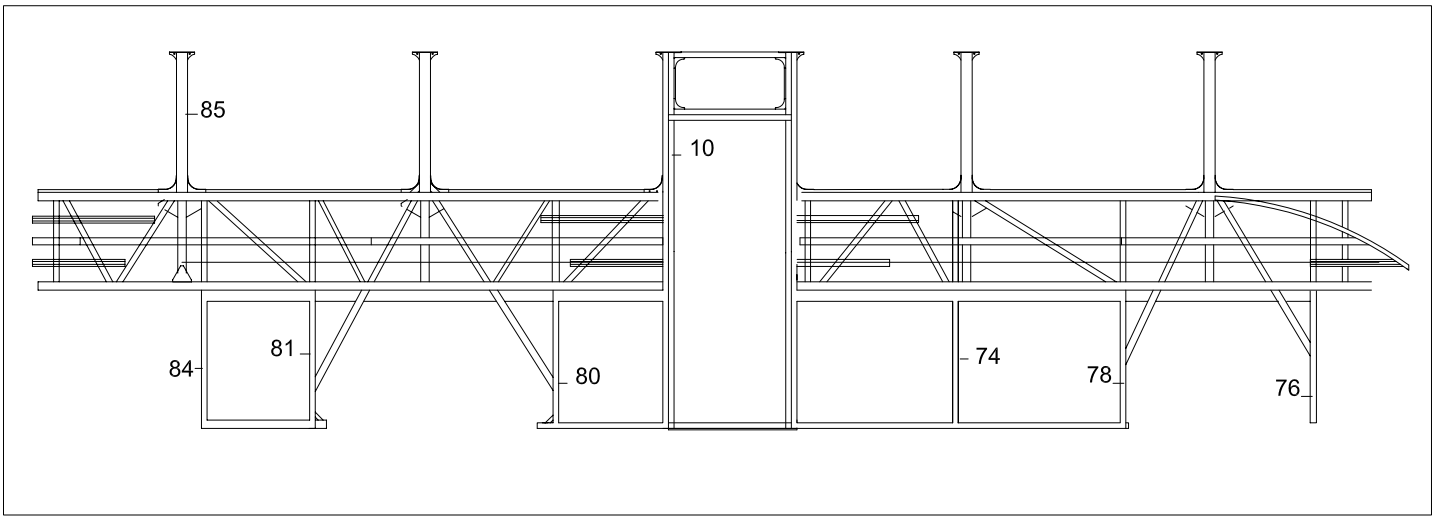

3

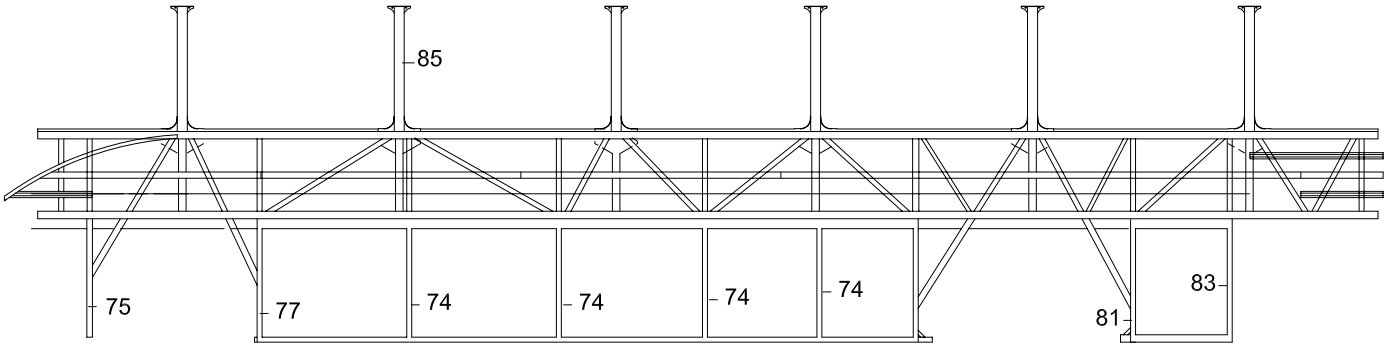

4

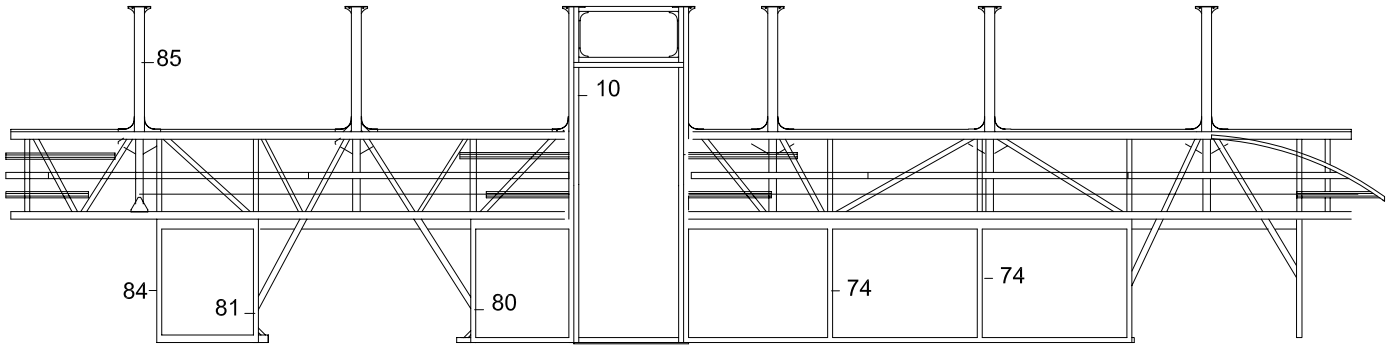

5

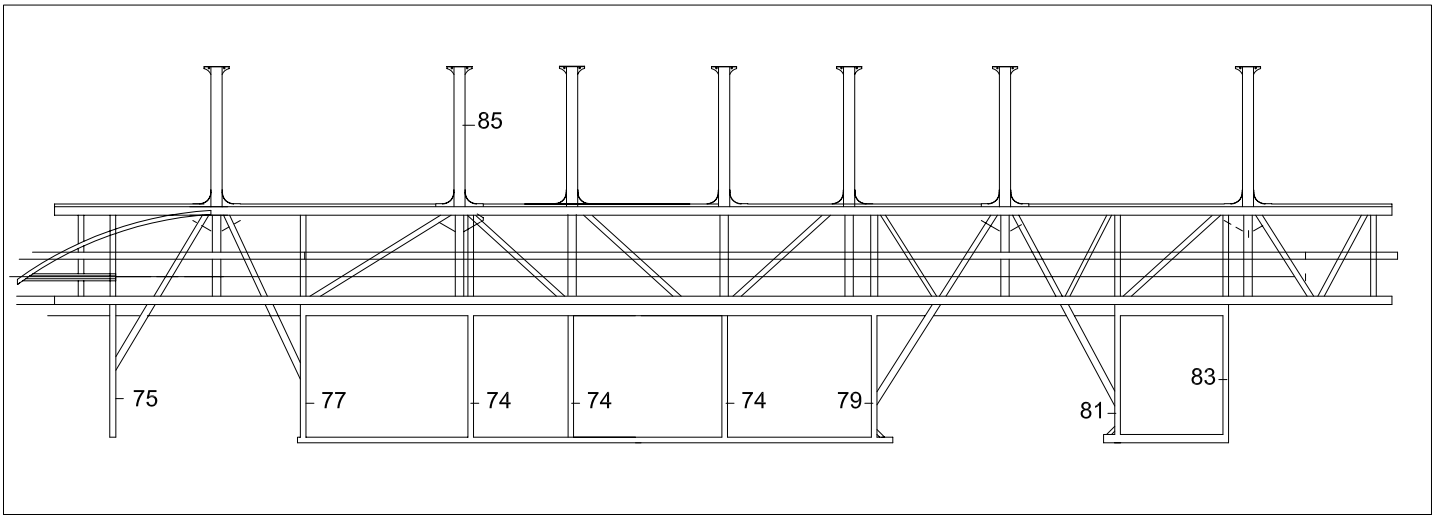

6

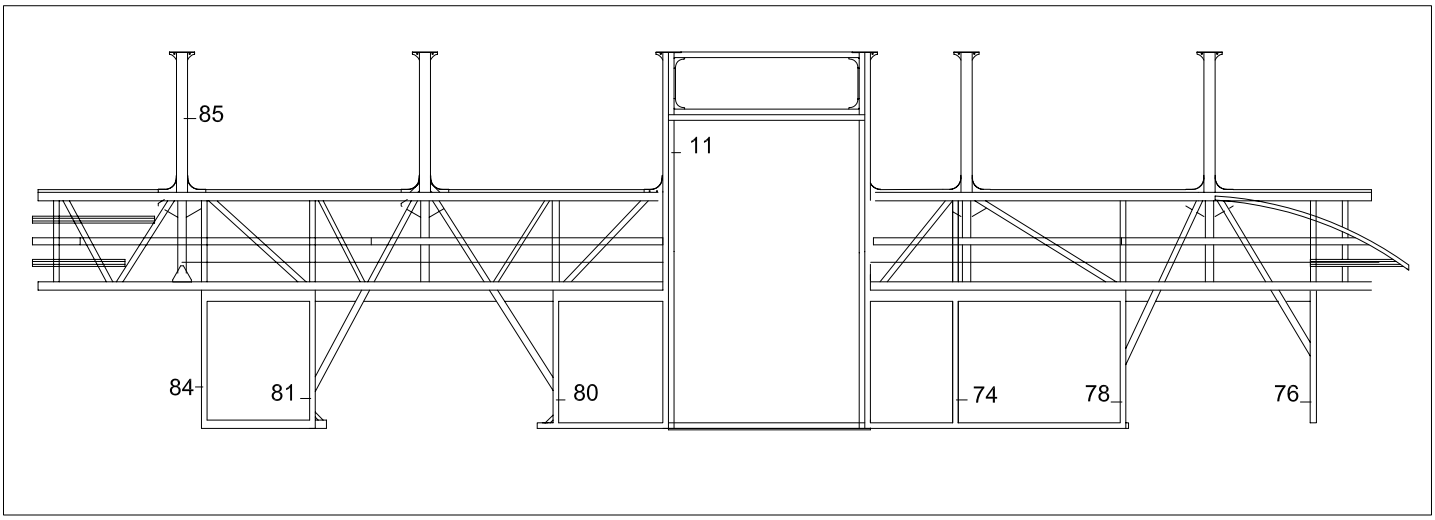

7

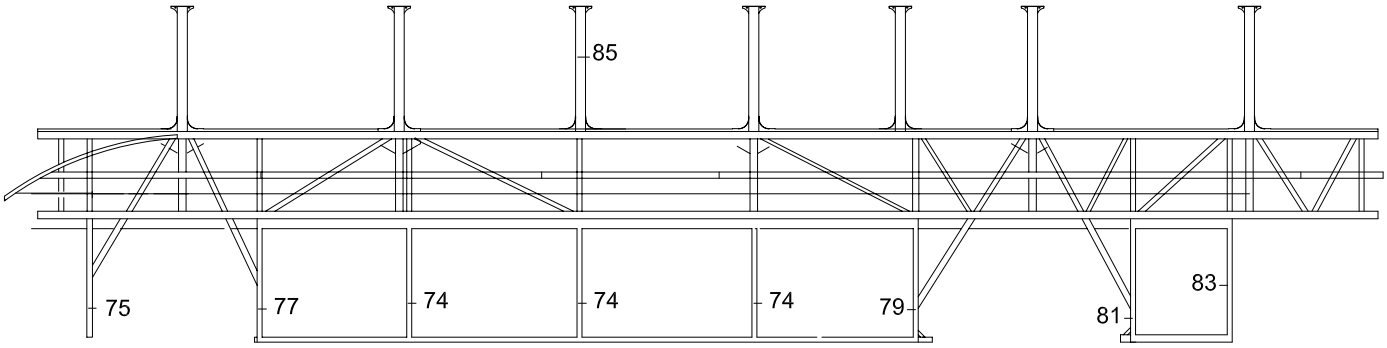

8

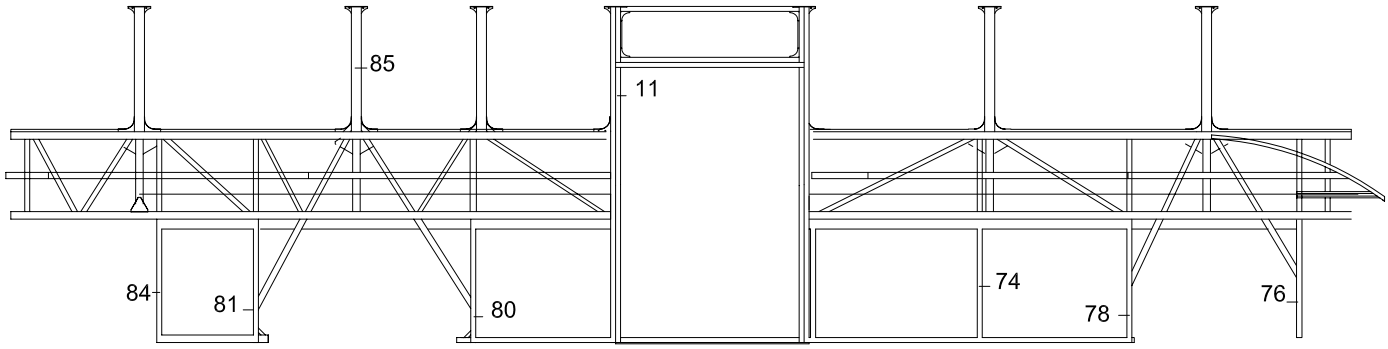

TEMSA	Yan gövde Side body Seitenwand	Drw.no: Vehicle Model: TB162W, TB162Z, TB162X, TB162Y TB163W, TB163Z, TB163X, TB163Y	32-030 RevDate: Page: 1

Pos	Part Number	Turkish	English	German	Qty	R/P	From	Up To	Original Number Supplier
1	62031-92076-72Y	SOL YAN GÖVDE KOMPLE	SIDE BODY ASSY LH		1		170105		
1	YP62031-96000-74Y	SOL YAN GÖVDE KOMPLE	SIDE BODY ASSY LH		1		170105		ISRAEL
2	62031-92076-73Y	SAĞ YAN GÖVDE KOMPLE	SIDE BODY ASSY RH		1		170105		
2	62031-92076-74Y	SAĞ YAN GÖVDE KOMPLE	SIDE BODY ASSY RH		1		170105		for with toilet
2	YP62031-96000-75Y	SAĞ YAN GÖVDE KOMPLE	SIDE BODY ASSY RH		1		170105		ISRAEL
3	62031-92076-75Y	SOL YAN GÖVDE KOMPLE	SIDE BODY ASSY LH		1		170105		
4	62031-92076-76Y	SAĞ YAN GÖVDE KOMPLE	SIDE BODY ASSY RH		1		170105		
4	62031-92076-77Y	SAĞ YAN GÖVDE KOMPLE	SIDE BODY ASSY RH		1		170105		for with toilet
5	YP62031-92066-83Y	SOL YAN GÖVDE KOMPLE	SIDE BODY ASSY LH		1		170105		
5	YP62031-92066-85Y	SOL YAN GÖVDE KOMPLE	SIDE BODY ASSY LH		1		170105		for with toilet
6	YP62031-92066-84Y	SAĞ YAN GÖVDE KOMPLE	SIDE BODY ASSY RH		1		170105		
6	YP62031-92066-86Y	SAĞ YAN GÖVDE KOMPLE	SIDE BODY ASSY RH		1		170105		for with toilet
7	YP62031-92066-87Y	SOL YAN GÖVDE KOMPLE	SIDE BODY ASSY LH		1		170105		BOZEL16-R66-VAR
7	YP62031-99000-70Y	SOL YAN GÖVDE KOMPLE	SIDE BODY ASSY LH		1		170105		BOZEL16-R66-YOK
8	YP62031-92066-88Y	SAĞ YAN GÖVDE KOMPLE	SIDE BODY ASSY RH		1		170105		BOZEL16-R66-VAR
8	YP62031-99000-71Y	SAĞ YAN GÖVDE KOMPLE	SIDE BODY ASSY RH		1		170105		BOZEL16-R66-YOK
10	62031-97080-71Y	KAPI KARKASI KOMPLERİ	ENTRANCE STRUCTURE DOOR		1		1		
10	62031-97080-70Y	KAPI KARKASI KOMPLESİ	ENTRANCE STRUCTURE DOOR		1		1		for with toilet
11	62031-94420-70Y	KAPI KARKASI KOMPLESİ	ENTRANCE STRUCTURE DOOR		1		1		
11	62031-92066-48Y	KAPI KARKASI KOMPLESİ	ENTRANCE STRUCTURE DOOR		1		1		for with toilet
74	62031-97010-14	ALT DİREK	PILLAR ASSY		AR		1		
75	62031-97010-15	ALT DİREK	PILLAR ASSY		AR		1		
76	62031-97010-16	ALT DİREK	PILLAR ASSY		AR		1		
77	62031-97010-17	ALT DİREK	PILLAR ASSY		AR		1		
78	62031-97010-18	ALT DİREK	PILLAR ASSY		AR		1		
79	62031-97010-19	ALT DİREK	PILLAR ASSY		AR		1		
80	62031-97010-20	ALT DİREK	PILLAR ASSY		AR		1		
81	62031-97010-21	ALT DİREK	PILLAR ASSY		AR		1		
82	62031-96010-22	ALT ETEK	SUPPORT FLOOR		AR		1		
83	62031-97010-23	ALT DİREK	PILLAR ASSY		AR		1		
84	62031-97010-24	ALT DİREK	PILLAR ASSY		AR		1		
85	62031-97100-70Y	PENCERE DİREĞİ	WINDOW PILLAR		AR		1		

TEMSA	Tavan Roof Dach	Group No : 32-040 Draw. Num. : x Rev. Date :	
	Vehicle Model: TB162W, TB163W,	Page : 1	

For Safkar A/C

1

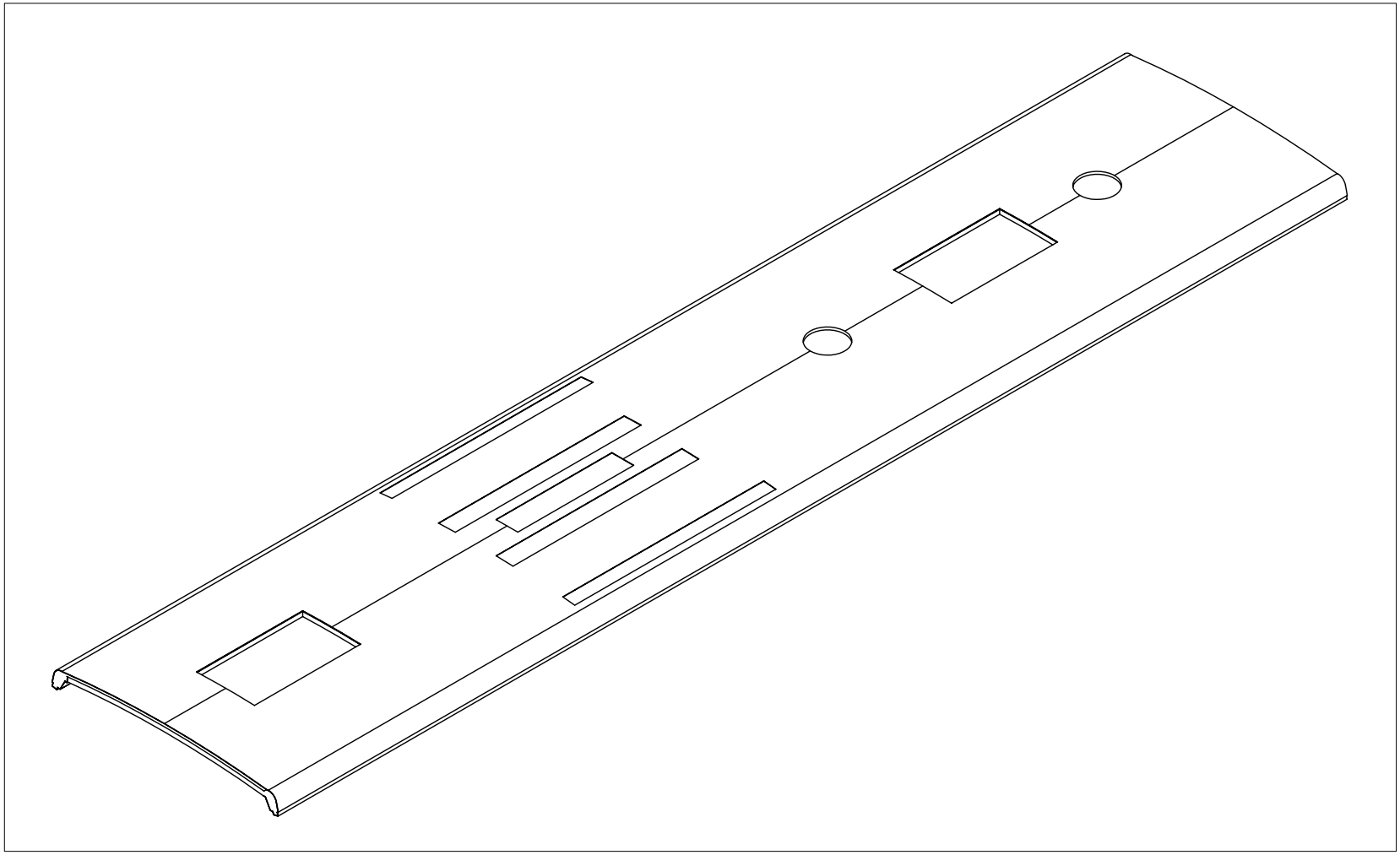

TEMSA	Tavan Roof Dach	Group No : 32-040 Draw. Num. : x Rev. Date :	
	Vehicle Model: TB162W, TB163W,	Page : 2	

For Sütrak A/C

2

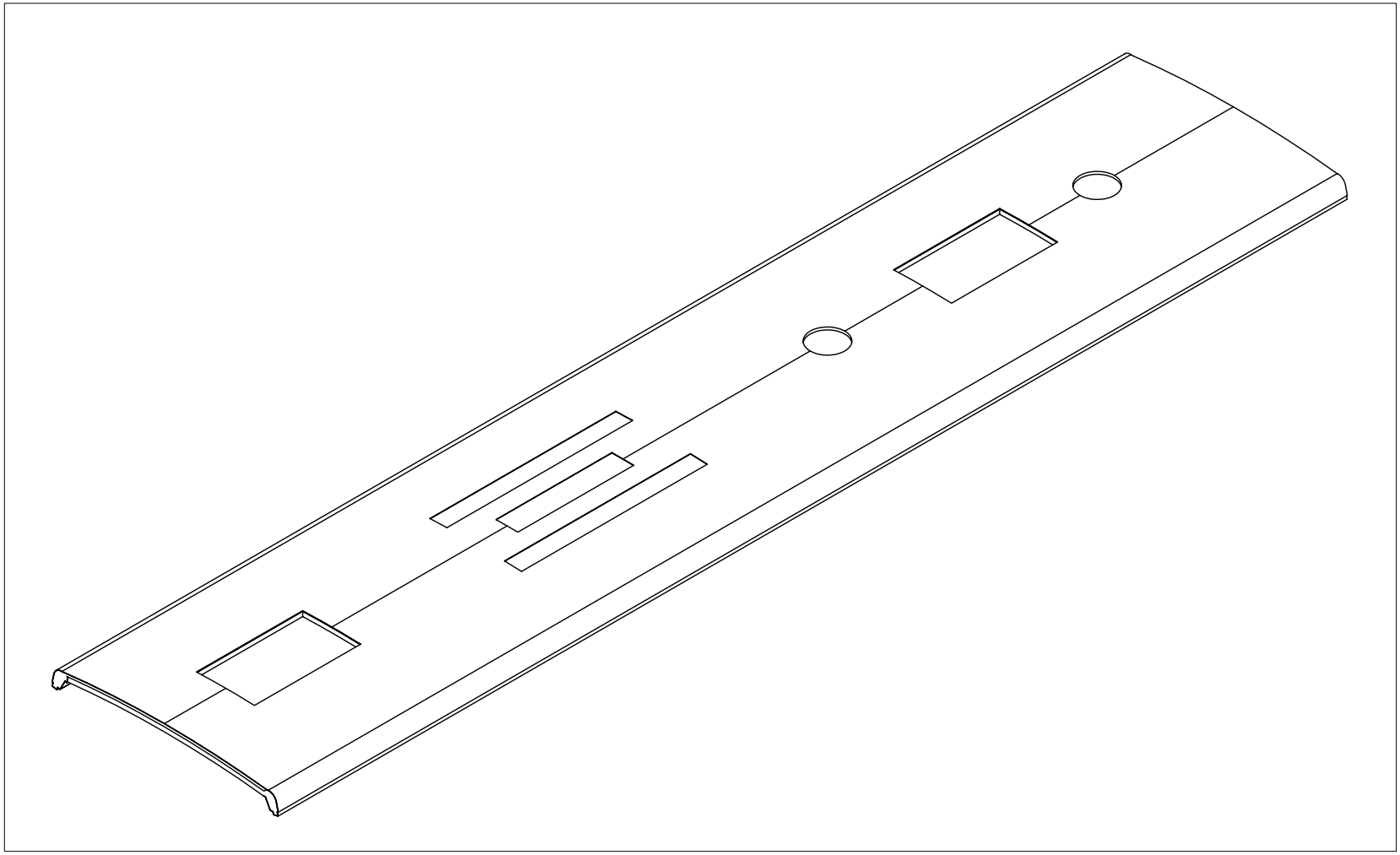

TEMSA	Tavan Roof Dach	Group No : 32-040 Draw. Num. : x Rev. Date :	
	Vehicle Model: TB162W,	Page : 3	

Israel - For Sütrak A/C

3

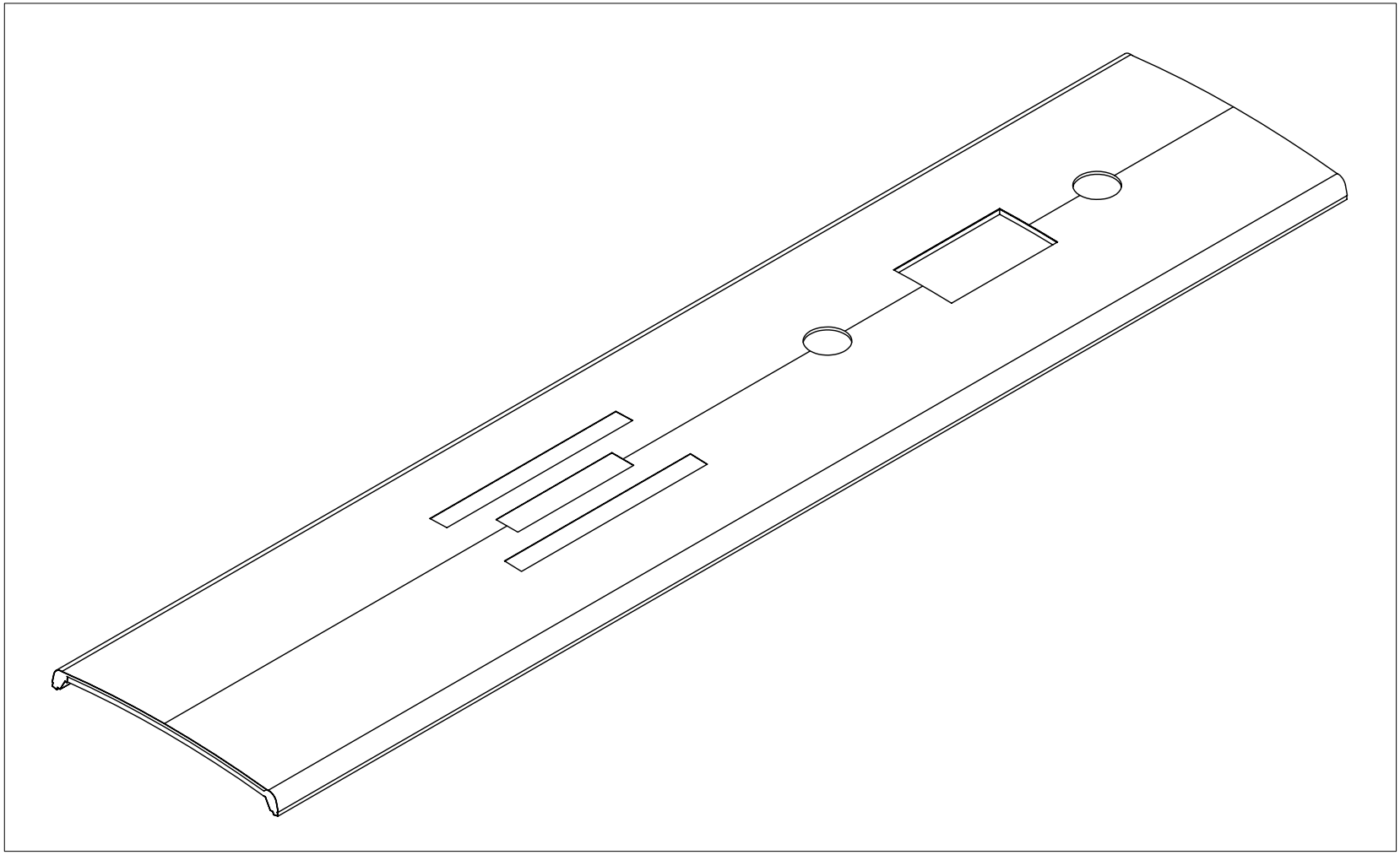

TEMSA	Tavan Roof Dach	Group No : 32-040 Draw. Num. : x Rev. Date :	
	Vehicle Model: TB162W, TB163W,	Page : 4	

without A/C

4

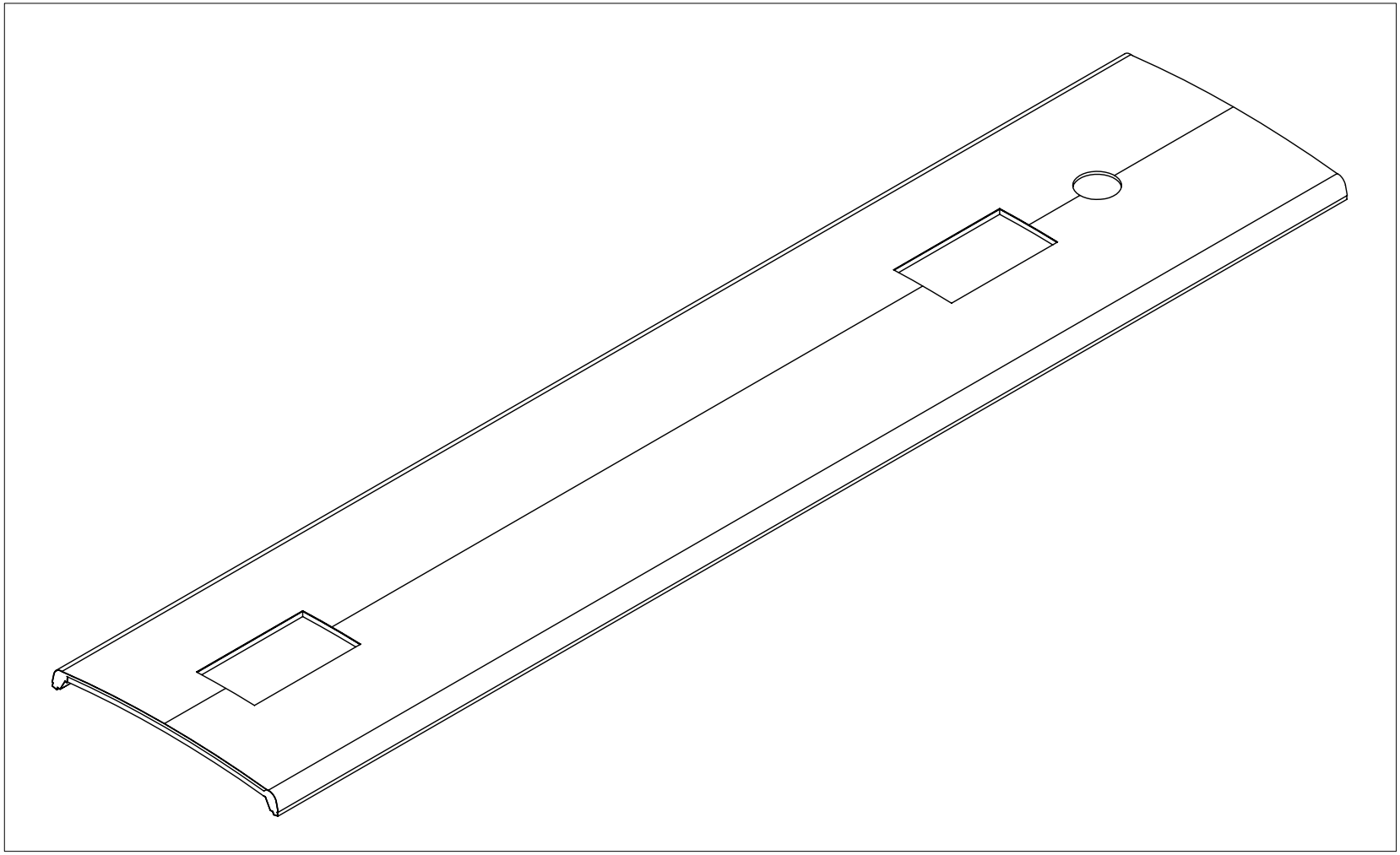

TEMSA	Tavan Roof Dach	Drw.no: Vehicle Model: **TB162W** **TB163W**	**32-040** RevDate: Page: 1

Pos	Part Number	Turkish	English	German	Qty	R/P	From	Up To	Original Number Supplier
1	YP62041-96000-70Y	TAVAN KOMPLESİ (SAFKAR)	ROOF ASSY		1	Y	290704		BKLIMA_TIPI_SAFKAR
2	YP62041-96050-70Y	TAVAN KOMPLESİ (SÜTRAK)	ROOF ASSY		1	Y	290704		BKLIMA_TIPI_SUTRAK
3	YP62041-96050-75Y	TAVAN KOMPLESİ (ISRAIL SPEC)	ROOF ASSY		1	Y	290704		BKLIMA_TIPI_SUTRAK01
4	YP62041-96150-70Y	TAVAN KOMPLESİ (KLIMA YOK)	ROOF ASSY		1	Y	290704		BKLIMA_YOK

TEMSA	Tavan Roof Dach	Group No : 32-041 Draw. Num. : x Rev. Date :	
	Vehicle Model: TB162Z, TB163Z,	Page : 1	

For Safkar A/C

1

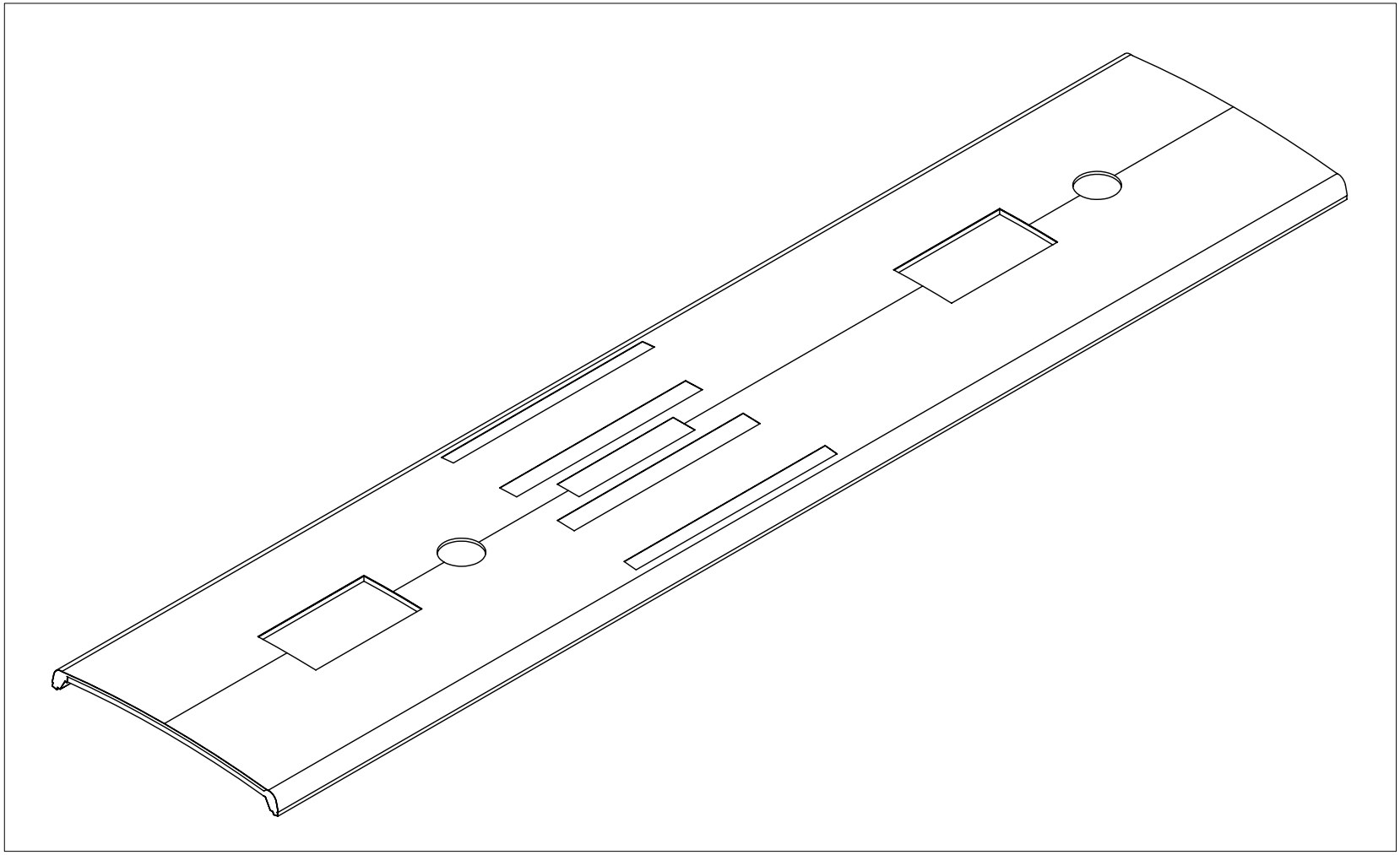

TEMSA	Tavan Roof< Dach	Group No : 32-041 Draw. Num. : x Rev. Date :
	Vehicle Model: TB162Z, TB163Z,	Page : 2

For Sütrak A/C

2

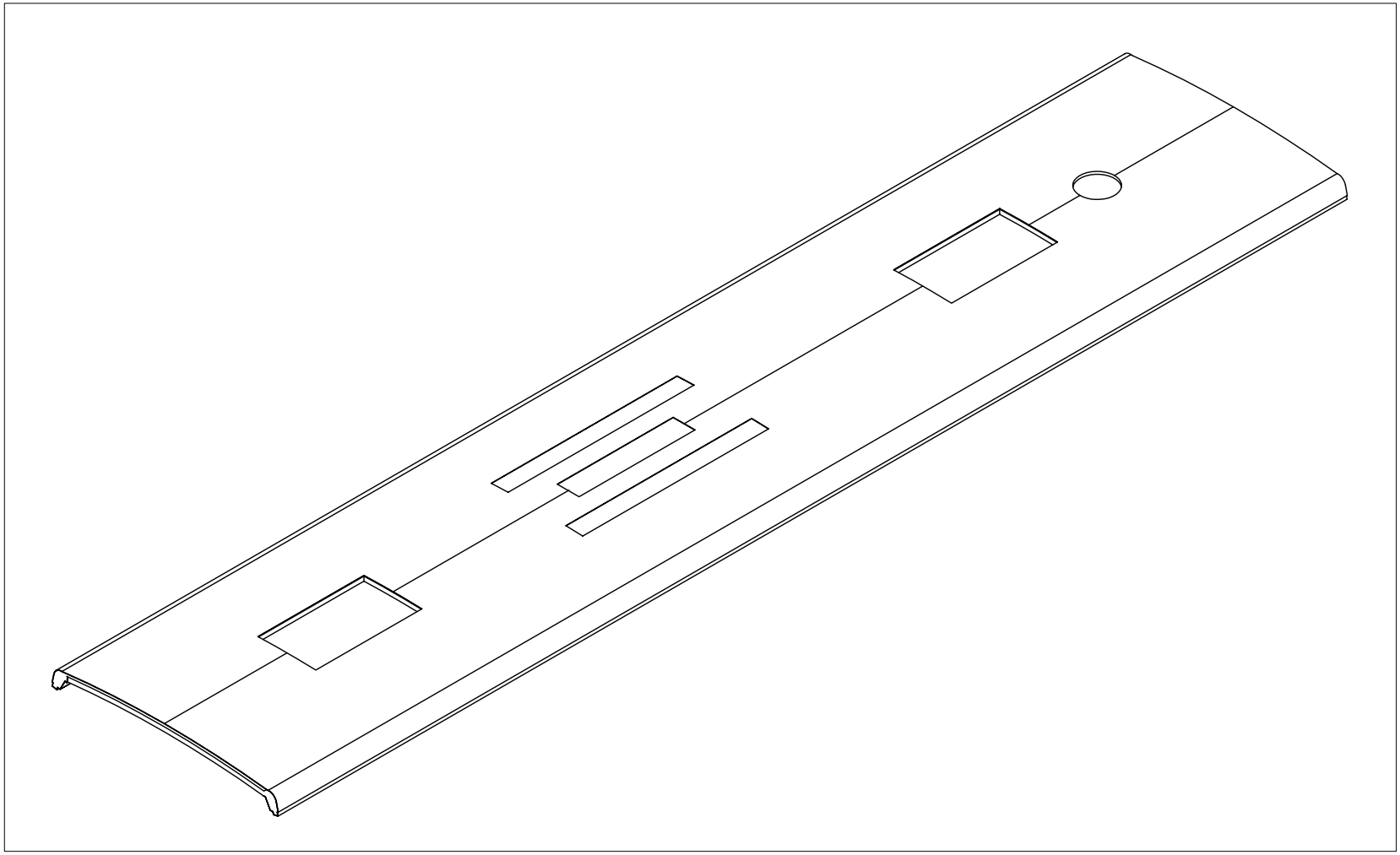

TEMSA	Tavan Roof< Dach	Group No : 32-041 Draw. Num. : x Rev. Date :
	Vehicle Model: TB162Z, TB163Z,	Page : 3

without A/C

3

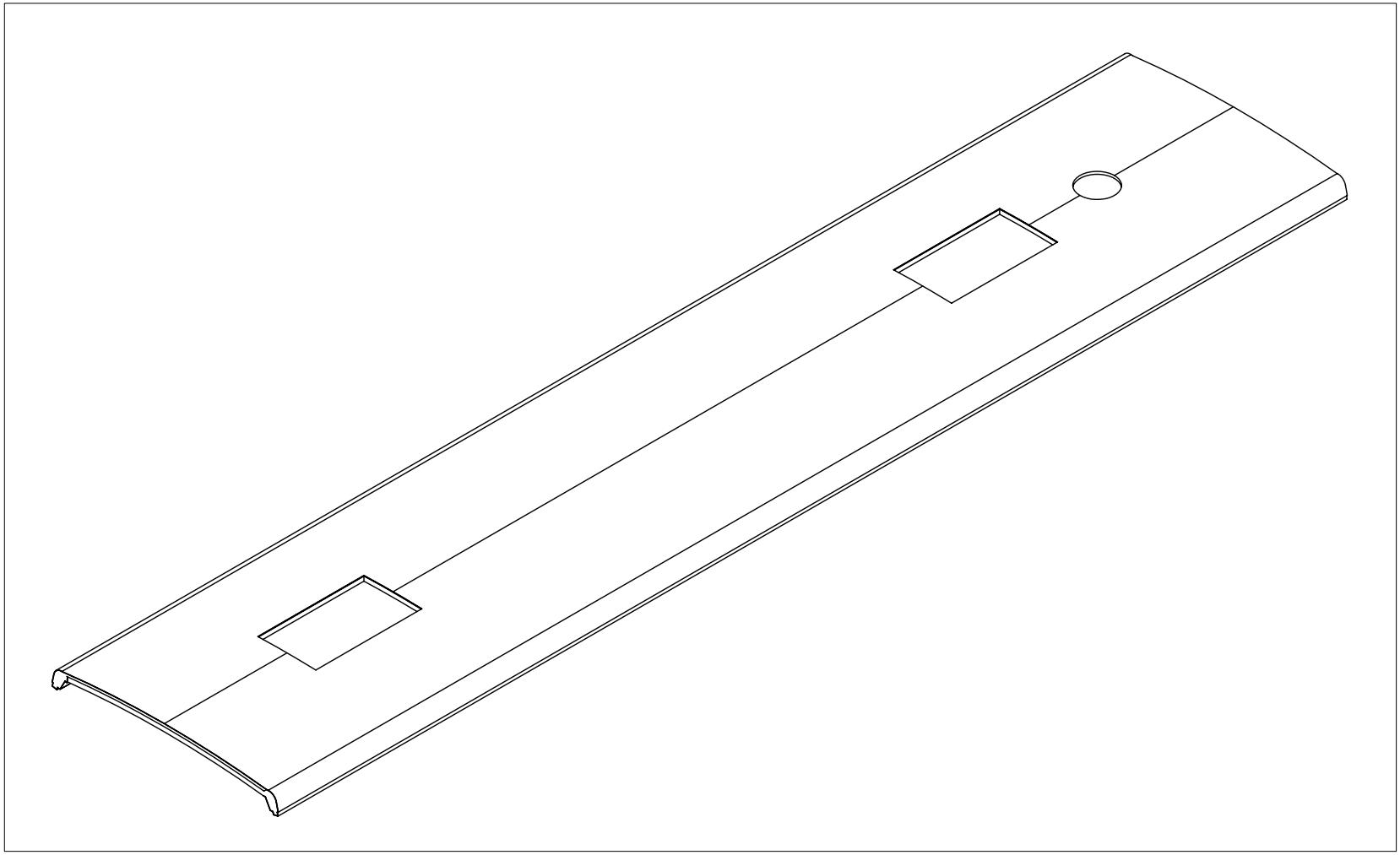

TEMSA	Tavan Roof Dach	Drw.no: Vehicle Model: **TB162Z** **TB163Z**	**32-041** RevDate: Page: 1

Pos	Part Number	Turkish	English	German	Qty	R/P	From	Up To	Original Number Supplier
1	YP62041-97000-71Y	TAVAN KOMPLESİ (SAFKAR)	ROOF ASSY		1	Y	290704		BKLIMA_TIPI_SAFKAR
2	YP62041-97050-71Y	TAVAN KOMPLESİ (SÜTRAK)	ROOF ASSY		1	Y	290704		BKLIMA_TIPI_SUTRAK
3	YP62041-97150-71Y	TAVAN KOMPLESİ (KLIMA YOK)	ROOF ASSY		1	Y	290704		BKLIMA_YOK

TEMSA	Tavan Roof< Dach	Group No : 32-042 Draw. Num. : x Rev. Date : Page : 1
	Vehicle Model: TB162X, TB163X,	

For Safkar A/C

1

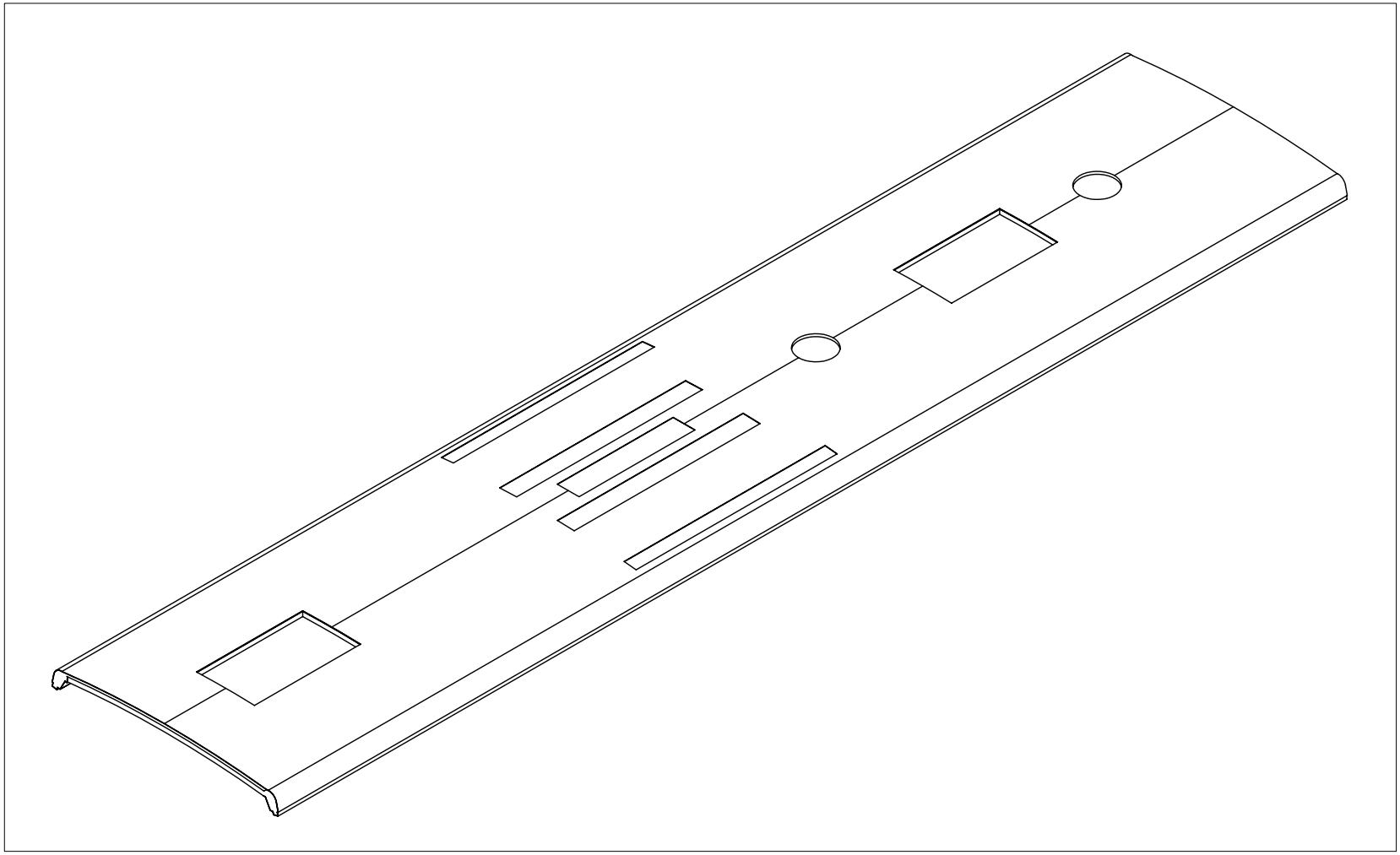

TEMSA	Tavan Roof Dach	Drw.no: Vehicle Model: **TB162X** **TB163X**	**32-042** RevDate: Page: 1

Pos	Part Number	Turkish	English	German	Qty	R/P	From	Up To	Original Number Supplier
1	YP62041-98000-71Y	TAVAN KOMPLESİ (SAFKAR)	ROOF ASSY		1	Y	290704		BKLIMA_TIPI_SAFKAR

TEMSA	Tavan Roof< Dach	Group No : 32-043 Draw. Num. : x Rev. Date : Page : 1
	Vehicle Model: TB162Y, TB163Y	

For Safkar A/C

1

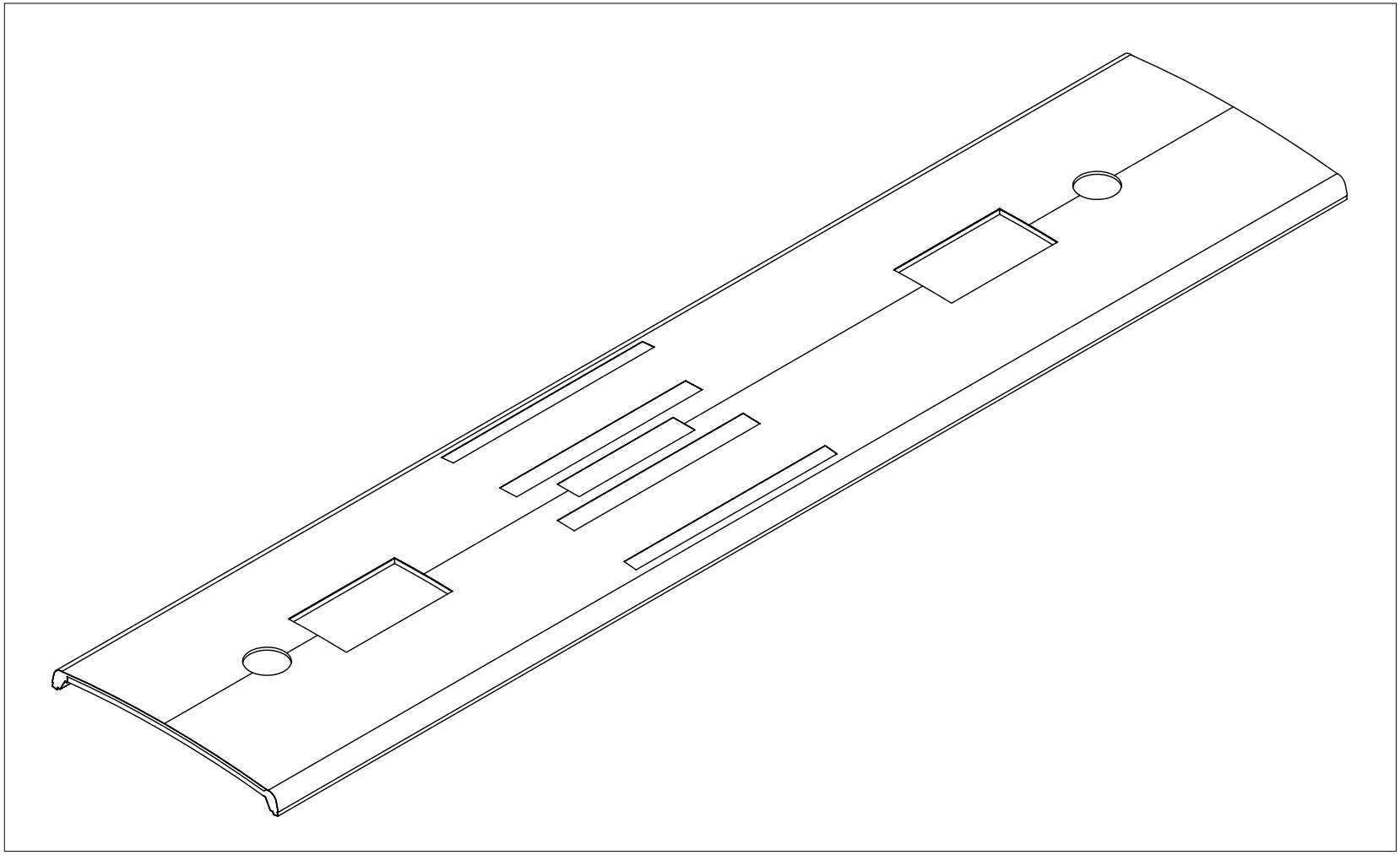

TEMSA	Tavan Roof Dach	Drw.no: Vehicle Model: **TB162Y** **TB163Y**	**32-043** RevDate: Page: 1

Pos	Part Number	Turkish	English	German	Qty	R/P	From	Up To	Original Number Supplier
1	YP62041-99000-71Y	TAVAN KOMPLESİ (SAFKAR)	ROOF ASSY		1	Y	290704		BKLIMA_TIPI_SAFKAR

TEMSA	Yan panel Panel side Seiten Paneele	Group No : 32-050 Draw. Num. : x Rev. Date : Page : 1
	Vehicle Model: TB162W, TB162Z, TB162X, TB162Y, TB163W, TB163Z, TB163X, TB163Y	

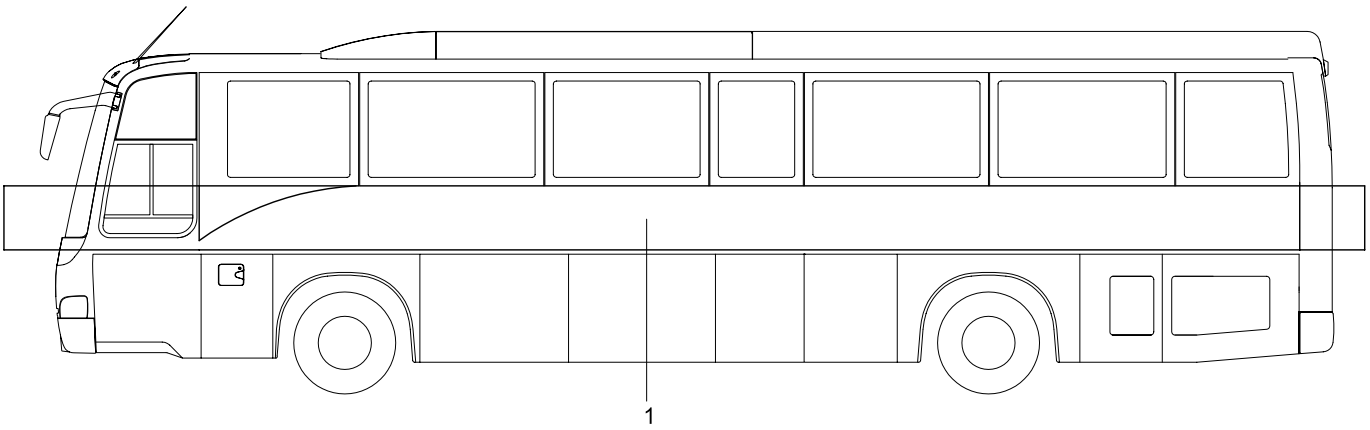

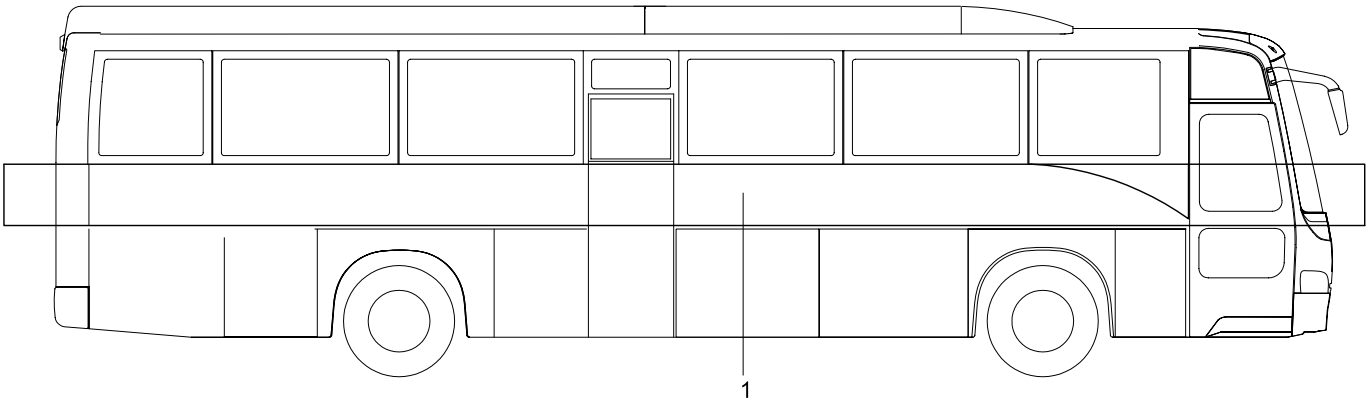

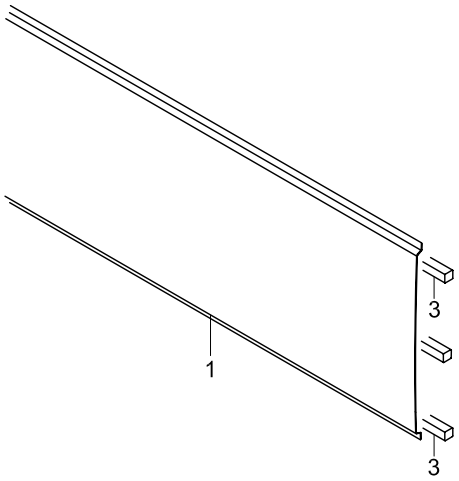

TEMSA	Yan panel Side panel Seiten Paneele	Drw.no: Vehicle Model: **TB162W, TB162Z, TB162X, TB162Y** **TB163W, TB163Z, TB163X, TB163Y**	**32-050** RevDate: Page: 1

Pos	Part Number	Turkish	English	German	Qty	R/P	From	Up To	Original Number Supplier
1	63109-70000-01Y	YAN PANEL	PANEL SIDE		2		1		G010X705RULOCCY
3	MC399751-036Y	KUTU PROFİL	PROFILE		AR		1		

TEMSA	Bagaj çerçevesi Luggage frame x	Group No : 32-070 Draw. Num. : x Rev. Date : Page : 1
	Vehicle Model: TB162W, TB163W,	

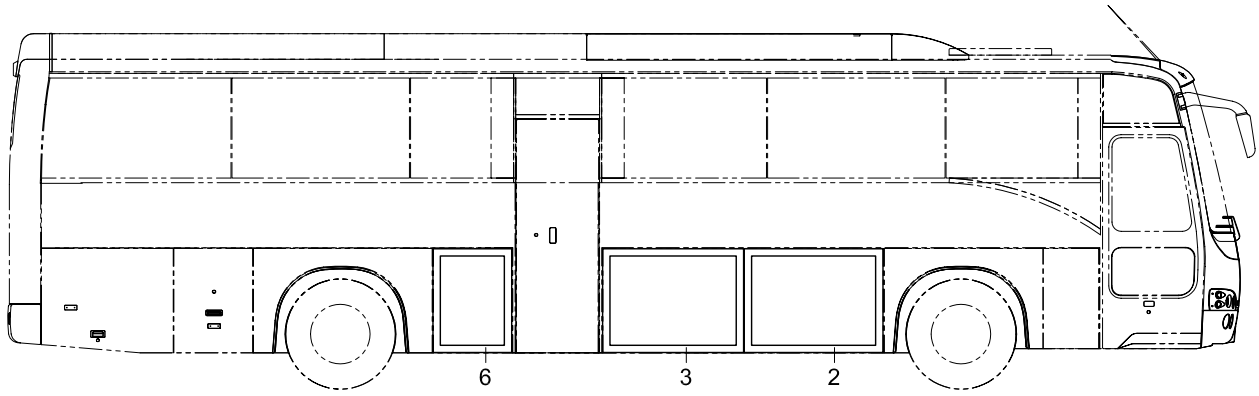

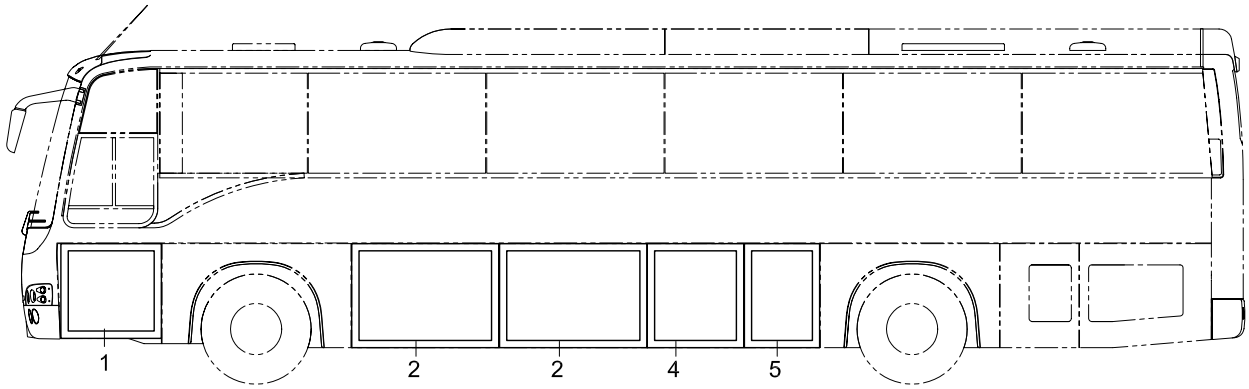

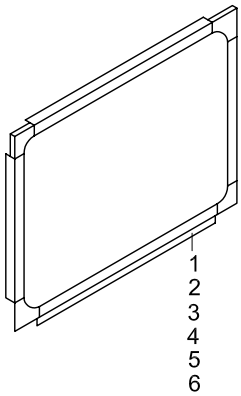

TEMSA	Bagaj çerçevesi Luggage frame	Drw.no: Vehicle Model: **TB162W** **TB163W**	**32-070** RevDate: Page: 1

Pos	Part Number	Turkish	English	German	Qty	R/P	From	Up To	Original Number Supplier
1	61714-90000-70Y	BAGAJ ÇERÇEVESİ	LUGGAGE FRAME		1		1		
2	61714-96100-70Y	BAGAJ ÇERÇEVESİ	LUGGAGE FRAME		3		1		
3	61714-96100-71Y	BAGAJ ÇERÇEVESİ	LUGGAGE FRAME		1		1		
4	61714-96100-72Y	BAGAJ ÇERÇEVESİ	LUGGAGE FRAME		1		1		
5	61714-96100-73Y	BAGAJ ÇERÇEVESİ	LUGGAGE FRAME		1		1		
6	61714-96100-74Y	BAGAJ ÇERÇEVESİ	LUGGAGE FRAME		1		1		

TEMSA	Bagaj çerçevesi Luggage frame x	Group No : 32-071 Draw. Num. : x Rev. Date : Page : 1
	Vehicle Model: TB162X, TB163X,	

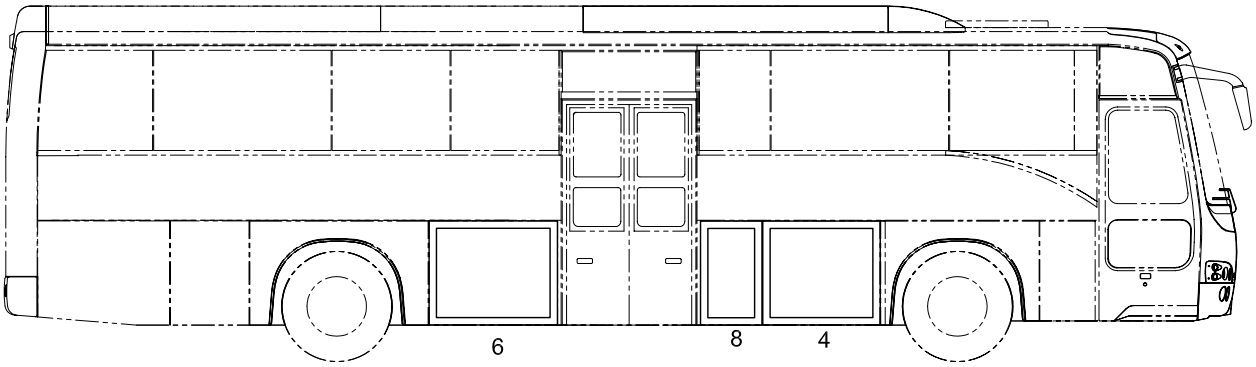

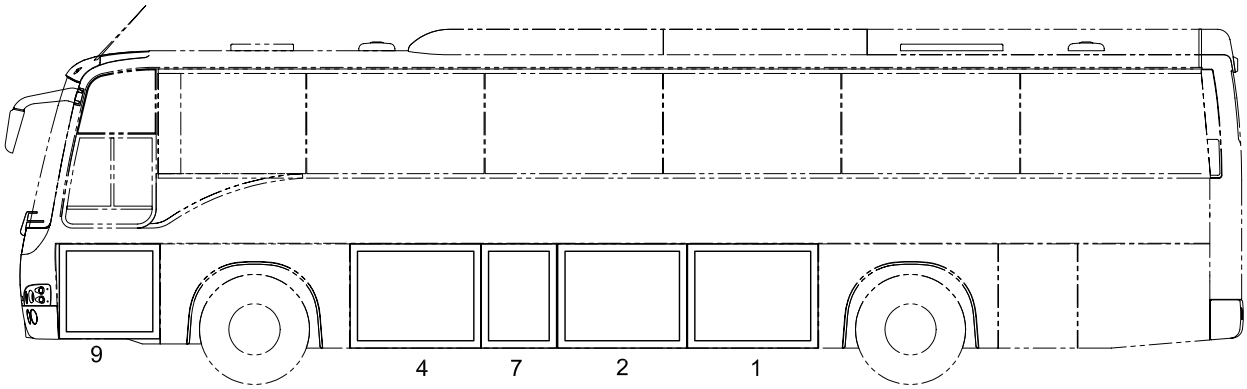

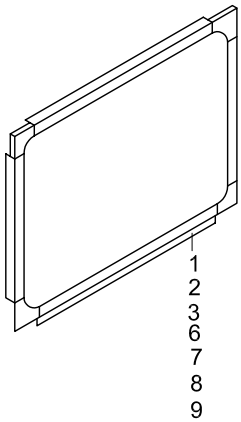

TEMSA	Bagaj çerçevesi Luggage frame	Drw.no: Vehicle Model: **TB162X** **TB163X**	**32-071** RevDate: Page: 1

Pos	Part Number	Turkish	English	German	Qty	R/P	From	Up To	Original Number Supplier
1	61714-98100-70Y	BAGAJ ÇERÇEVESİ	LUGGAGE FRAME		1		1		
2	61714-96100-70Y	BAGAJ ÇERÇEVESİ	LUGGAGE FRAME		1		1		
4	61714-97100-70Y	BAGAJ ÇERÇEVESİ	LUGGAGE FRAME		2		1		
6	61714-98100-72Y	BAGAJ ÇERÇEVESİ	LUGGAGE FRAME		1		1		
7	61714-98100-73Y	BAGAJ ÇERÇEVESİ	LUGGAGE FRAME		1		1		
8	61714-98100-74Y	BAGAJ ÇERÇEVESİ	LUGGAGE FRAME		1		1		
9	61714-90000-70Y	BAGAJ ÇERÇEVESİ	LUGGAGE FRAME		1		1		

TEMSA	Bagaj çerçevesi Luggage frame x	Group No : 32-072 Draw. Num. : x Rev. Date : Page : 1
	Vehicle Model: TB162Z, TB163Z,	

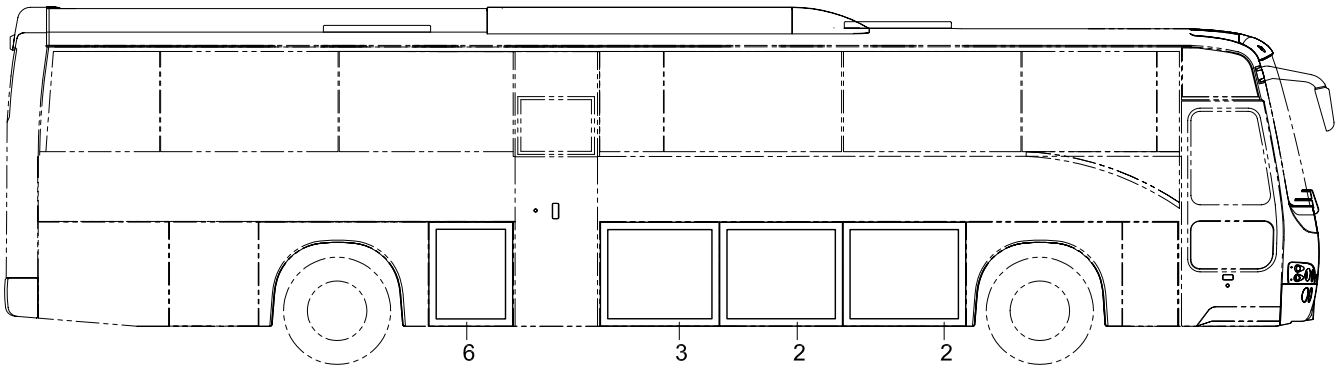

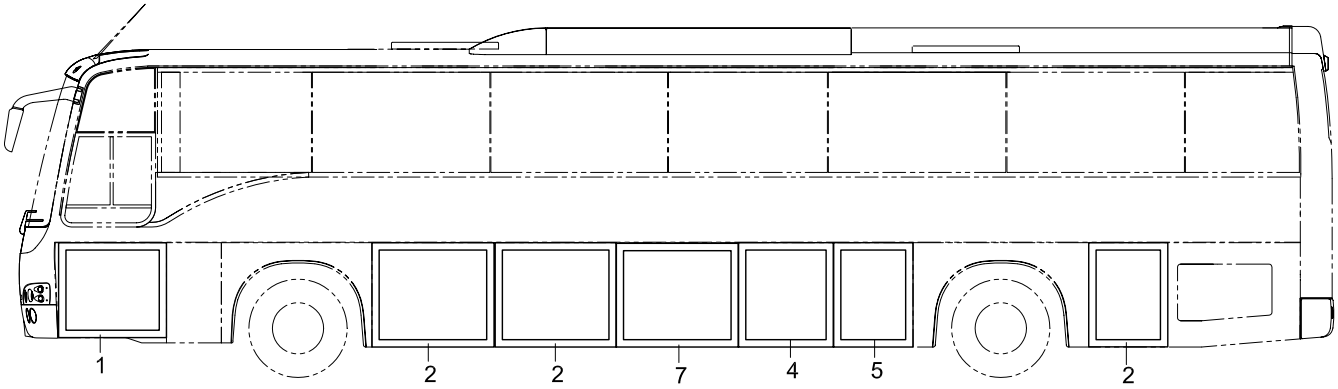

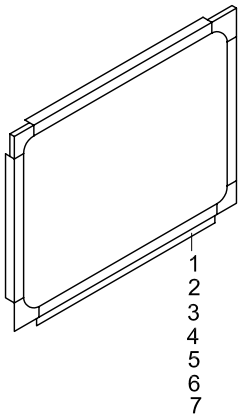

TEMSA	Bagaj çerçevesi Luggage frame	Drw.no: Vehicle Model: **TB162Z** **TB163Z**	**32-072** RevDate: Page: 1

Pos	Part Number	Turkish	English	German	Qty	R/P	From	Up To	Original Number Supplier
1	61714-90000-70Y	BAGAJ ÇERÇEVESİ	LUGGAGE FRAME		1		1		
2	61714-97100-70Y	BAGAJ ÇERÇEVESİ	LUGGAGE FRAME		4		1		
3	61714-97100-71Y	BAGAJ ÇERÇEVESİ	LUGGAGE FRAME		1		1		
4	61714-96100-72Y	BAGAJ ÇERÇEVESİ	LUGGAGE FRAME		1		1		
5	61714-96100-73Y	BAGAJ ÇERÇEVESİ	LUGGAGE FRAME		1		1		
6	61714-96100-74Y	BAGAJ ÇERÇEVESİ	LUGGAGE FRAME		1		1		
7	61714-97100-76Y	BAGAJ ÇERÇEVESİ	LUGGAGE FRAME		1		1		

TEMSA	Bagaj çerçevesi Luggage frame x	Group No : 32-073 Draw. Num. : x Rev. Date : Page : 1
	Vehicle Model: TB162Y, TB163Y	

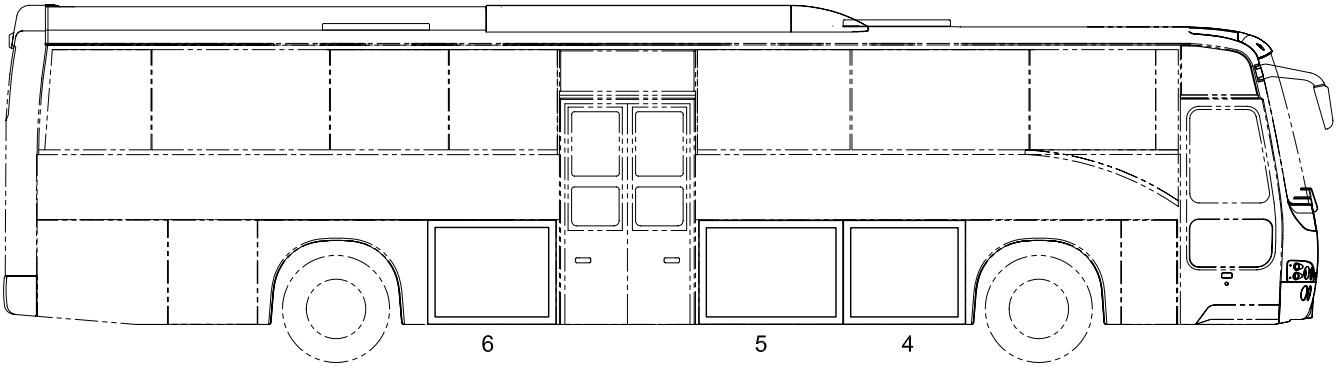

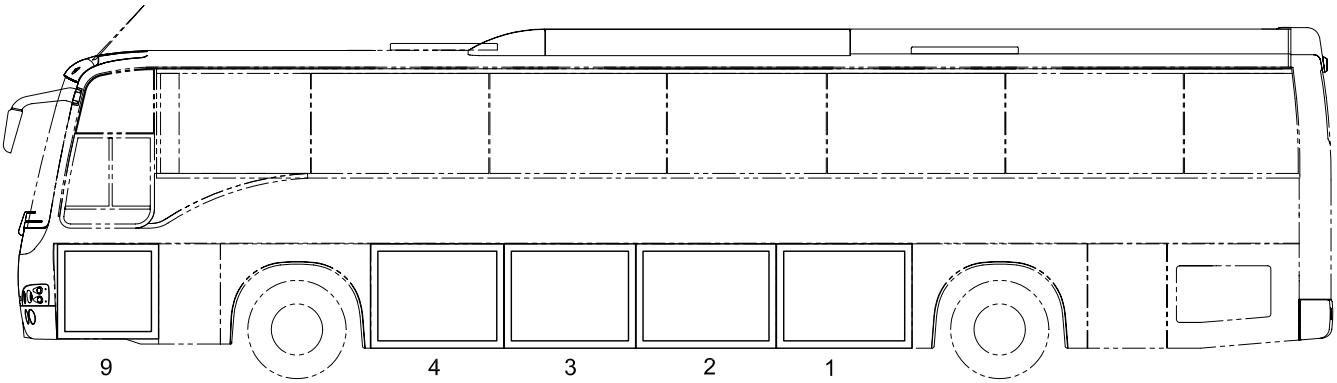

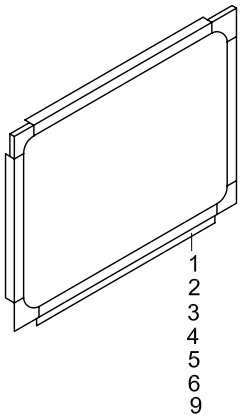

TEMSA	Bagaj çerçevesi Luggage frame	Drw.no: Vehicle Model: **TB162Y** **TB163Y**	**32-073** RevDate: Page: 1

Pos	Part Number	Turkish	English	German	Qty	R/P	From	Up To	Original Number Supplier
1	61714-98100-70Y	BAGAJ ÇERÇEVESİ	LUGGAGE FRAME		1		1		
2	61714-96100-70Y	BAGAJ ÇERÇEVESİ	LUGGAGE FRAME		1		1		
3	61714-98100-71Y	BAGAJ ÇERÇEVESİ	LUGGAGE FRAME		1		1		
4	61714-97100-70Y	BAGAJ ÇERÇEVESİ	LUGGAGE FRAME		2		1		
5	61714-99100-70Y	BAGAJ ÇERÇEVESİ	LUGGAGE FRAME		1		1		
6	61714-98100-72Y	BAGAJ ÇERÇEVESİ	LUGGAGE FRAME		1		1		
9	61714-90000-70Y	BAGAJ ÇERÇEVESİ	LUGGAGE FRAME		1		1		

33 ŞASİ ve TABAN
FRAME & SILL
x

33-010	Ön şasi Front Frame x	TB162W TB163W	TB162Z TB163Z	TB162X TB163X	TB162Y TB163Y
33-020	Orta şasi ve taban Center frame and sill x	TB162W TB163W	TB162Z TB163Z	TB162X TB163X	TB162Y TB163Y
33-030	Arka şasi Rear Frame x	TB162W TB163W	TB162Z TB163Z	TB162X TB163X	TB162Y TB163Y
33-040	Ön taban Front Sill x	TB162W TB163W	TB162Z TB163Z	TB162X TB163X	TB162Y TB163Y
33-060	Arka taban Rear Sill x	TB162W TB163W	TB162Z TB163Z	TB162X TB163X	TB162Y TB163Y
33-070	Arka duvar Rear Wall x	TB162W TB163W	TB162Z TB163Z	TB162X TB163X	TB162Y TB163Y
33-080	Ön basamak Front step x	TB162W TB163W	TB162Z TB163Z	TB162X TB163X	TB162Y TB163Y
33-090	Orta basamak Center step x	TB162W TB163W	TB162Z TB163Z		
33-091	Orta basamak Center step x			TB162X TB163X	TB162Y TB163Y
33-110	Taban tahtaları Floorboards x	TB162W TB163W			
33-111	Taban tahtaları Floorboards x			TB162X TB163X	
33-112	Taban tahtaları Floorboards x		TB162Z TB163Z		
33-113	Taban tahtaları Floorboards x				TB162Y TB163Y
33-120	Motor ve retarder alt muhafazası Engine and retarder under cover x	TB162W TB163W	TB162Z TB163Z	TB162X TB163X	TB162Y TB163Y

TEMSA	Ön şasi Front Frame Vorder Rahmen	Group No : 33-010 Draw. Num. : x Rev. Date : Page : 1
	Vehicle Model: TB162W, TB162Z, TB162X, TB162Y, TB163W, TB163Z, TB163X, TB163Y	

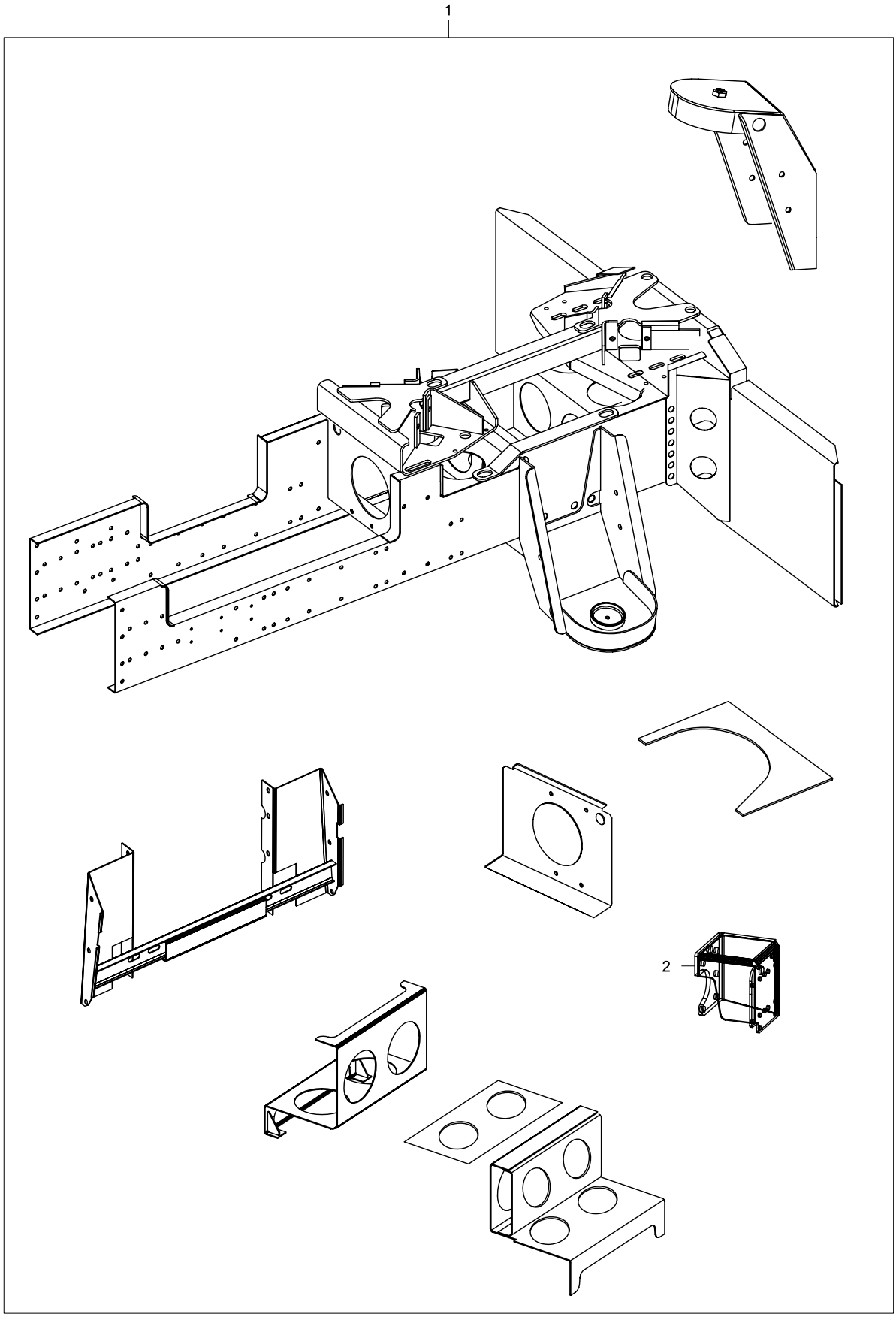

TEMSA	Ön şasi Front frame Vorder Rahmen	Drw.no: Vehicle Model: TB162W, TB162Z, TB162X, TB162Y TB163W, TB163Z, TB163X, TB163Y	33-010 RevDate: Page: 1

Pos	Part Number	Turkish	English	German	Qty	R/P	From	Up To	Original Number Supplier
1	61301-96000-70Y	ÖN ŞASİ KOMPLE	FRONT FRAME ASSY		1		1		

1

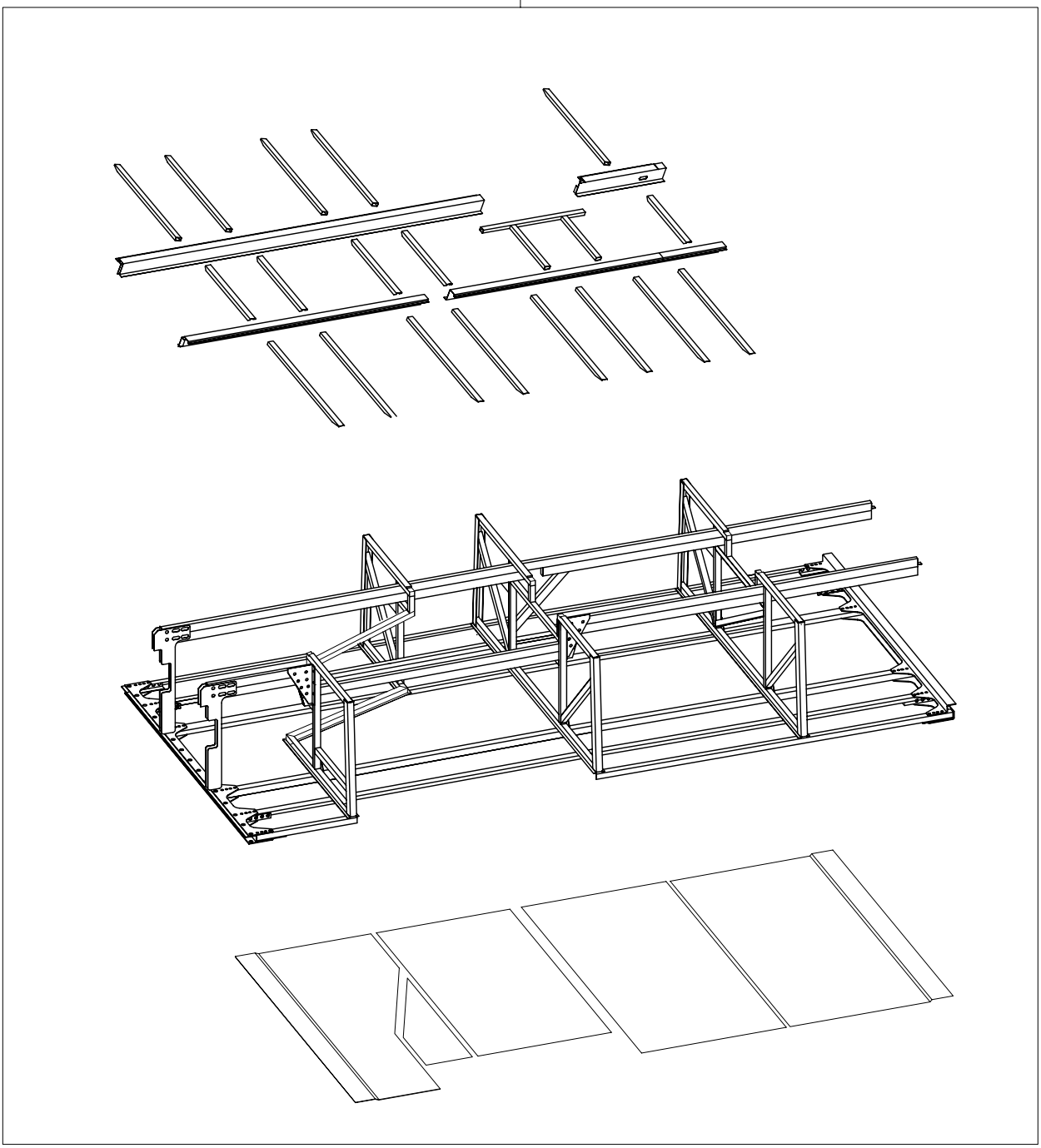

2

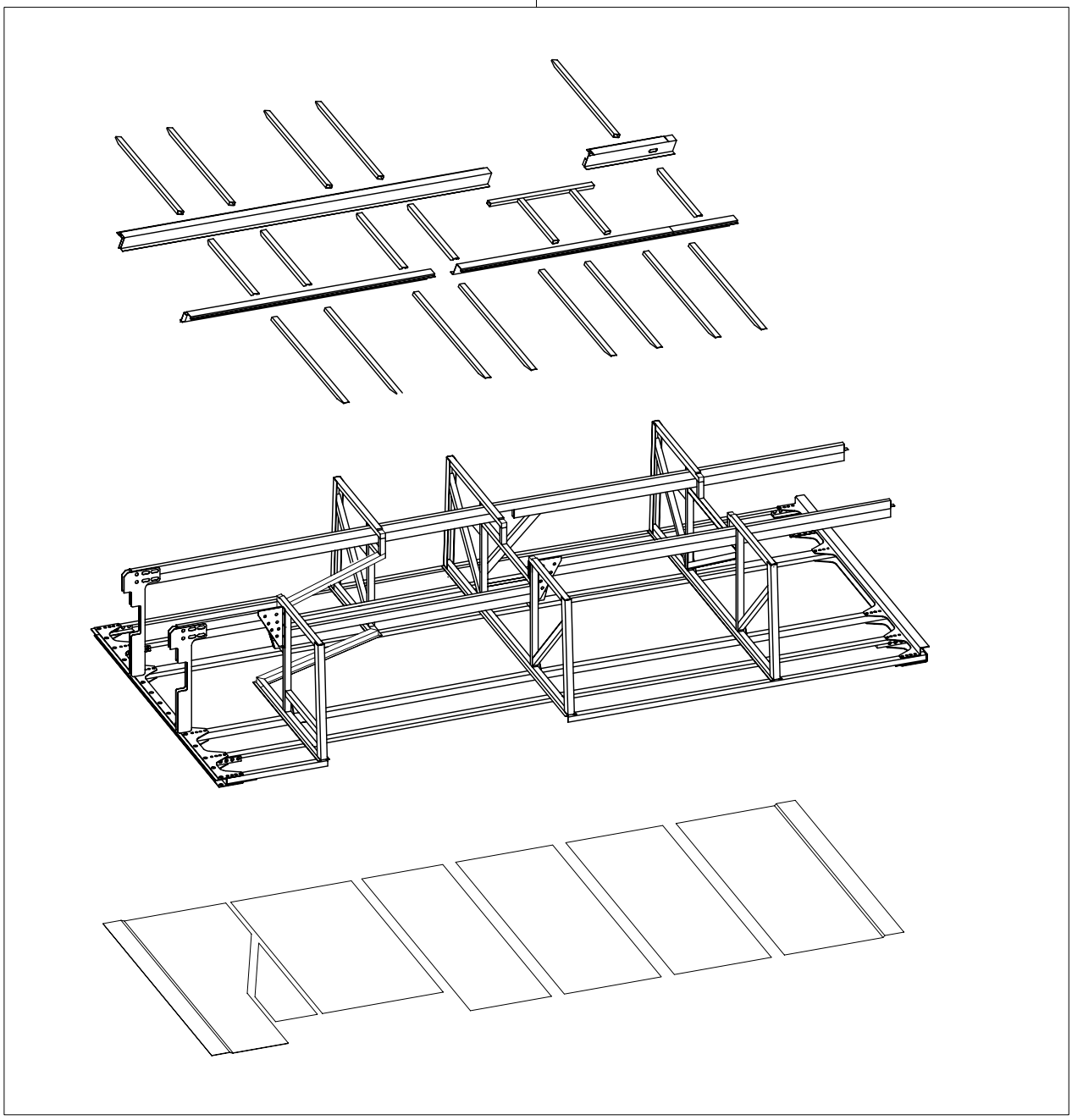

3

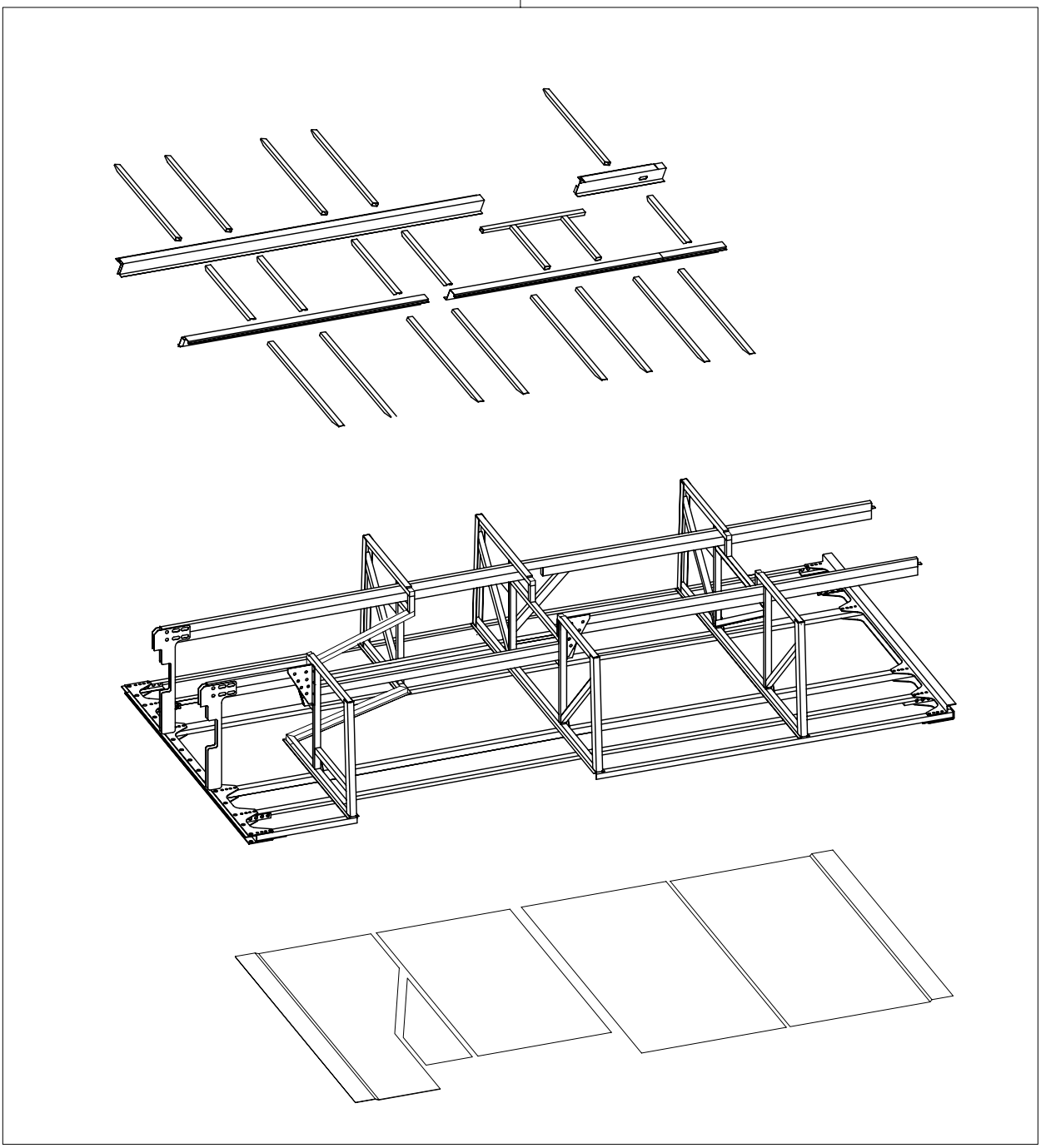

4

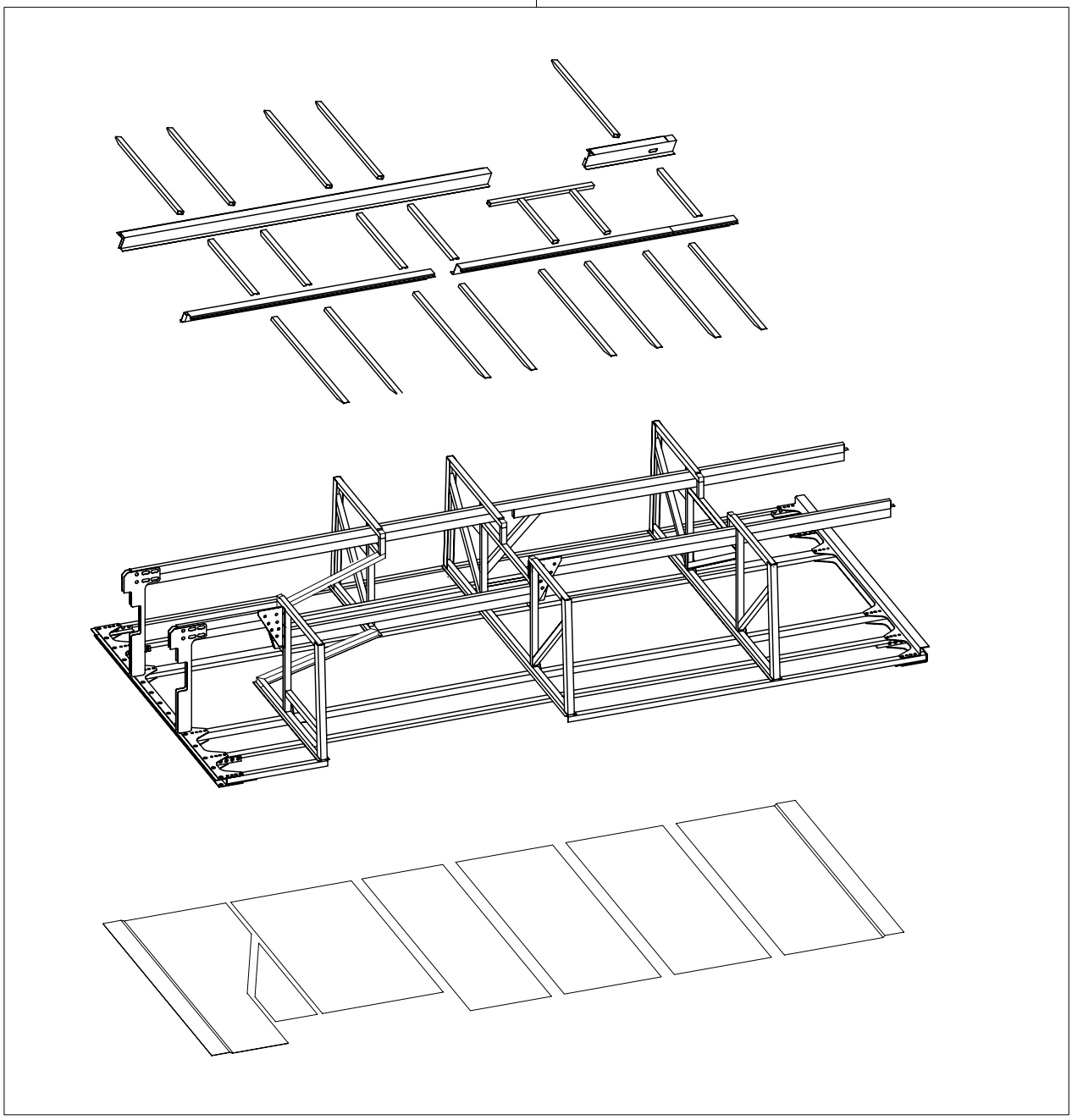

TEMSA	Orta şasi ve taban Center frame and sill Mittlere rahmen und boden	Drw.no: Vehicle Model: TB162W, TB162Z, TB162X, TB162Y TB163W, TB163Z, TB163X, TB163Y	33-020 RevDate: Page: 1

Pos	Part Number	Turkish	English	German	Qty	R/P	From	Up To	Original Number Supplier
1	61401-96000-75Y	ORTA ŞASİ KOMPLE	CENTER FRAME ASSY		1		1		
1	61401-96000-75Y	ORTA ŞASİ KOMPLE	CENTER FRAME ASSY		1		1		for with toilet
2	61401-97000-76Y	ORTA ŞASİ KOMPLE	CENTER FRAME ASSY		1		1		
2	61401-97000-85Y	ORTA ŞASİ KOMPLE	CENTER FRAME ASSY		1		1		for with toilet
3	61401-98000-76Y	ORTA ŞASİ KOMPLE	CENTER FRAME ASSY		1		1		
3	61401-98000-77Y	ORTA ŞASİ KOMPLE	CENTER FRAME ASSY		1		1		for with toilet
4	61401-99000-76Y	ORTA ŞASİ KOMPLE	CENTER FRAME ASSY		1		1		
4	61401-99000-77Y	ORTA ŞASİ KOMPLE	CENTER FRAME ASSY		1		1		for creche bus

TEMSA	Arka şasi Rear Frame Hintere Rahmen	Group No : 33-030 Draw. Num. : x Rev. Date :
	Vehicle Model: TB162W, TB162Z, TB162X, TB162Y,	Page : 1

1

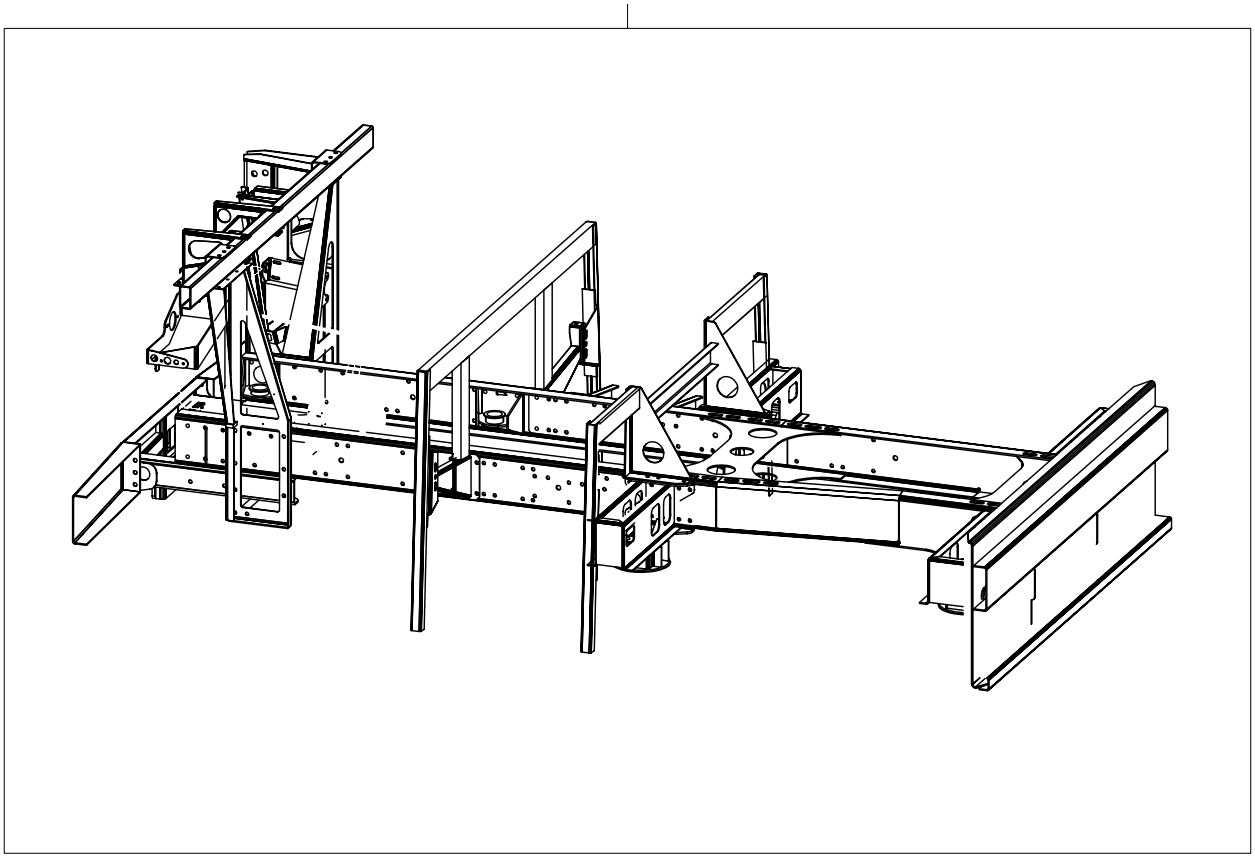

2

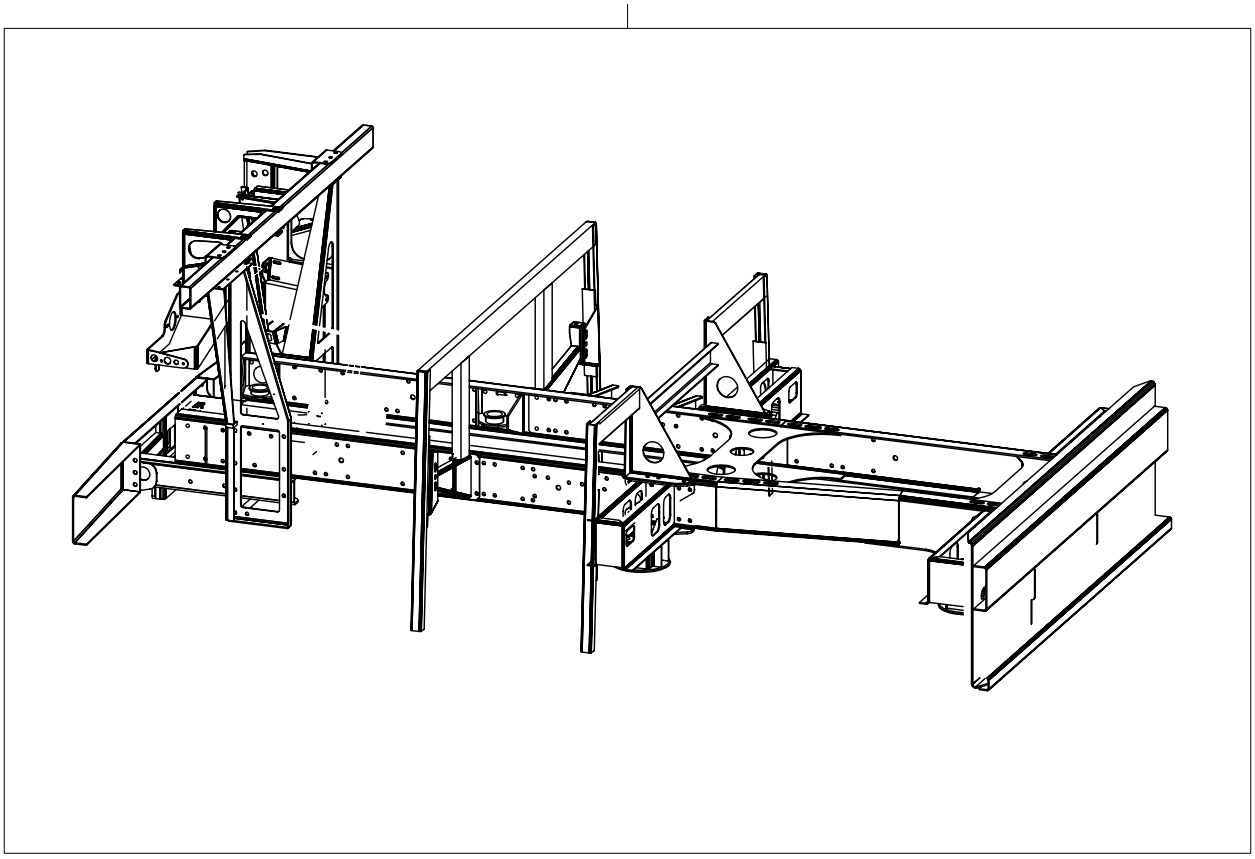

TEMSA	Arka şasi Rear frame Hintere Rahmen	Drw.no: Vehicle Model: **TB162W, TB162Z, TB162X, TB162Y** **TB163W, TB163Z, TB163X, TB163Y**	**33-030** RevDate: Page: 1

Pos	Part Number	Turkish	English	German	Qty	R/P	From	Up To	Original Number Supplier
1	61504-96000-70Y	ARKA ŞASE KOMPLE	REAR FRAME ASSY		1		1		for manual transmissior 360ps
1	61504-96000-71Y	ARKA ŞASE KOMPLE	REAR FRAME ASSY		1		1		for automatic transmiss 360ps
2	61504-98000-71Y	ARKA ŞASE KOMPLE	REAR FRAME ASSY		1		1		410ps

1

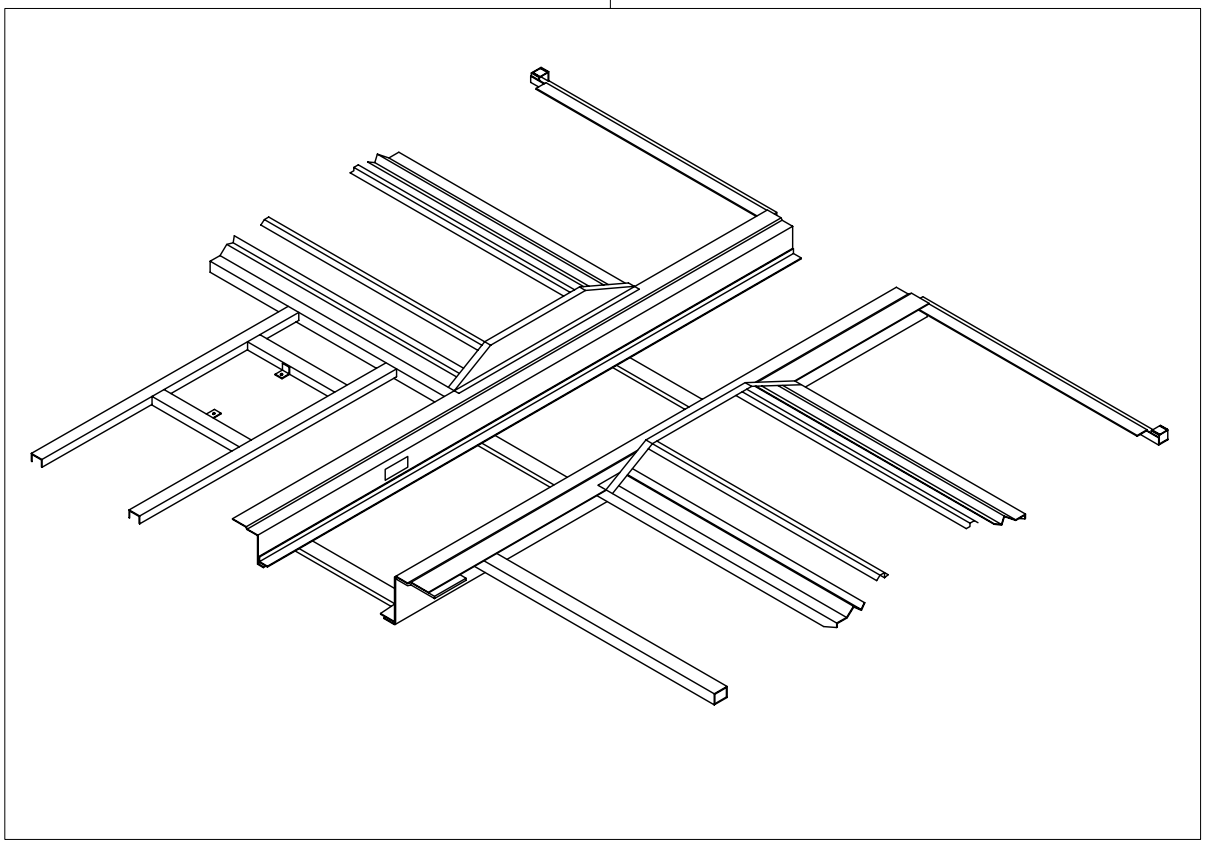

TEMSA	Ön taban Front sill Vordere Boden	Drw.no: Vehicle Model: TB162W, TB162Z, TB162X, TB162Y TB163W, TB163Z, TB163X, TB163Y	33-040 RevDate: Page: 1

Pos	Part Number	Turkish	English	German	Qty	R/P	From	Up To	Original Number Supplier
1	61304-96010-71Y	ÖN TABAN KOMPLE	FRONT SILL ASSY		1		1		

TEMSA	Arka taban Rear sill Hintere Boden	Group No : 33-060 Draw. Num. : x Rev. Date : Page : 1
	Vehicle Model: TB162W, TB162Z, TB162X, TB162Y, TB163W, TB163Z, TB163X, TB163Y	

1

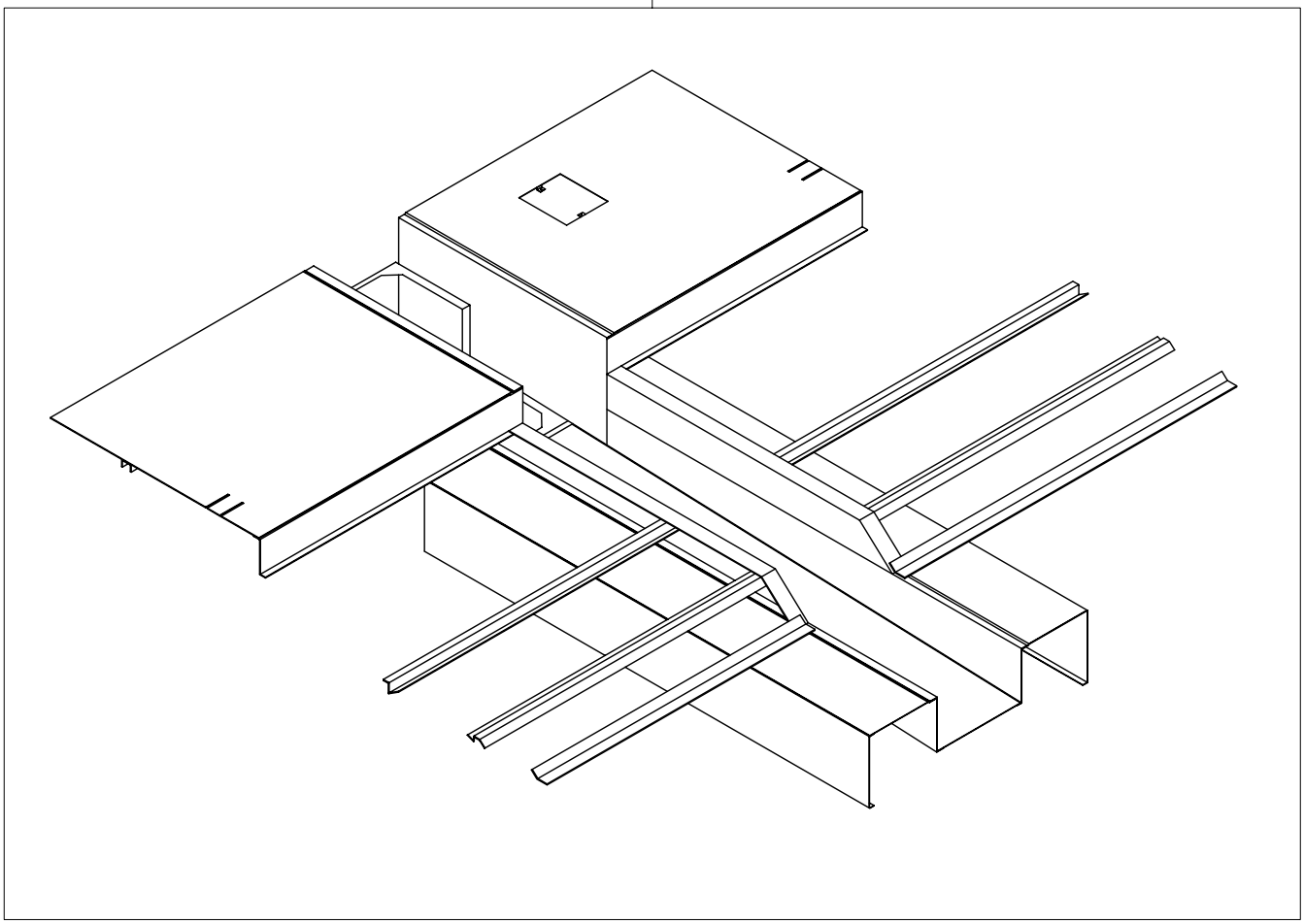

TEMSA	Arka taban Rear sill Hintere Boden	Drw.no: Vehicle Model: TB162W, TB162Z, TB162X, TB162Y TB163W, TB163Z, TB163X, TB163Y	33-060 RevDate: Page: 1

Pos	Part Number	Turkish	English	German	Qty	R/P	From	Up To	Original Number Supplier
1	61504-97000-71Y	ARKA TABAN KOMPLE	REAR SILL ASSY		1		1		

TEMSA	Arka duvar Rear wall< Heckwand	Group No : 33-070 Draw. Num. : x Rev. Date : Page : 1
	Vehicle Model: TB162W, TB162Z, TB162X, TB162Y, TB163W, TB163Z, TB163X, TB163Y	

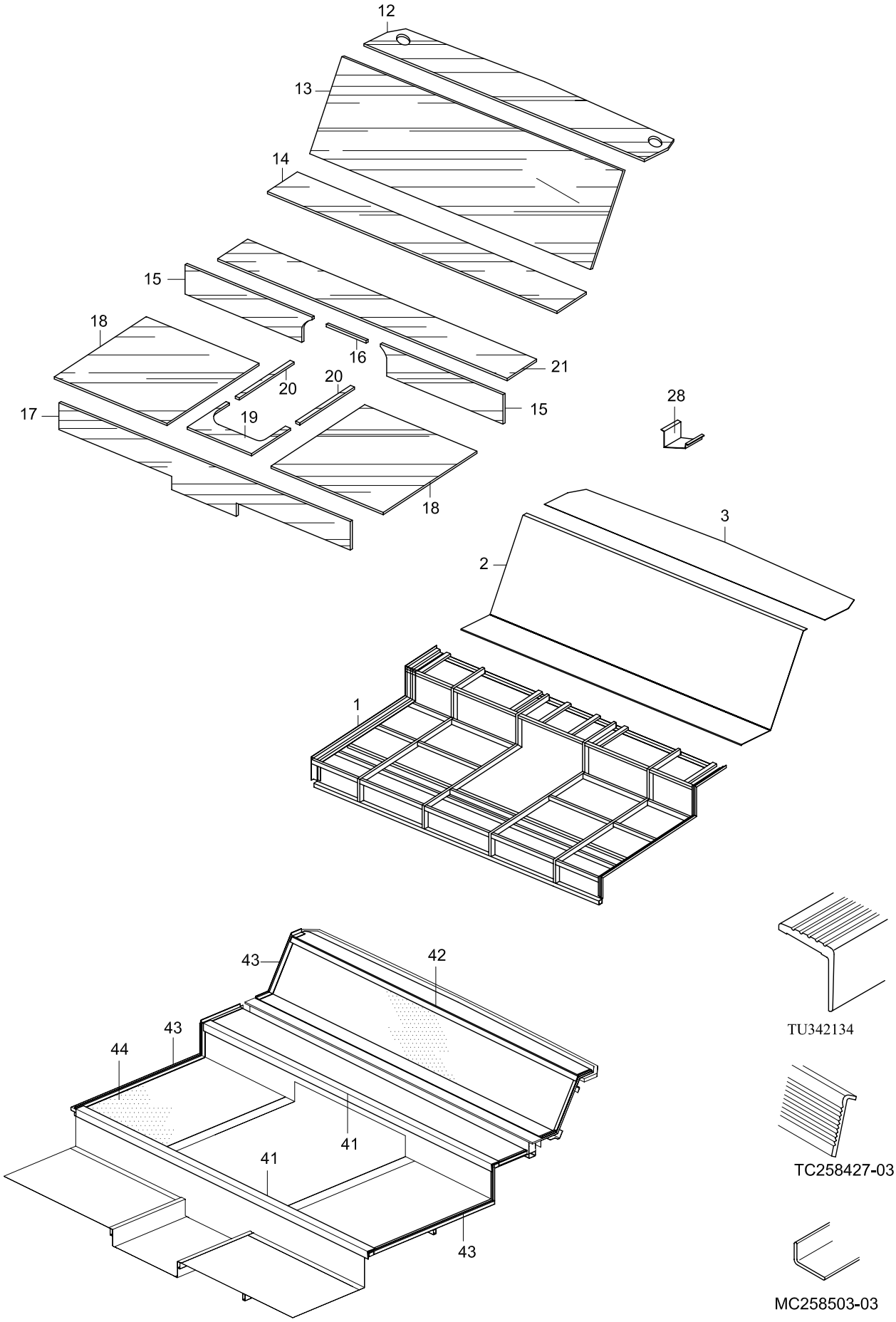

TEMSA	Arka duvar Rear wall Heckwand	Drw.no: Vehicle Model: TB162W, TB162Z, TB162X, TB162Y TB163W, TB163Z, TB163X, TB163Y	33-070 RevDate: Page: 1

Pos	Part Number	Turkish	English	German	Qty	R/P	From	Up To	Original Number Supplier
1	62202-97310-72Y	ARKA DUVAR KOMP N0.1	REAR WALL ASSY NO.1		1		1		
2	62202-94120-70Y	ARKA DUVAR KOMP N0.2	REAR WALL ASSY NO.2		1		1		
3	62202-90400-30X	PANEL	PANEL		1		1		
12	62202-90450-07AX	TAHTA	BOARD		1		1		
13	62202-94450-08X	TAHTA	BOARD		1		1		
14	62202-94450-09X	TAHTA	BOARD		1		1		
15	62202-94460-10X	TAHTA	BOARD		2		1		
17	62202-97450-06X	TAHTA	BOARD		1		1		
18	62202-94460-01X	TAHTA	BOARD		2		1		
19	62202-94460-12X	TAHTA	BOARD		1		1		
20	62202-94460-13X	TAHTA	BOARD		2		1		
21	62202-94460-04X	TAHTA	BOARD		1		1		
28	62202-90400-21Y	LAMBA BRAKETİ	L-PLAKA		2		1		
41	TU342134Y	ÇITA	PLATE EDGE		AR		1		
42	TC258427-03Y	ÇITA	PLATE EDGE		AR		1		
43	MC258503-03Y	ÇITA	PLATE EDGE		AR		1		
44	TES40450-14Y	MUŞAMBA	MAT		AR		1		

TEMSA	Ön basamak - 20.09.2004 e kadar Front step - up to 2004' 09.20 Vordere Stufe	Group No : 33-080 Draw. Num. : x Rev. Date :
	Vehicle Model: TB162W, TB162Z, TB162X, TB162Y, TB163W, TB163Z, TB163X, TB163Y	Page : 1

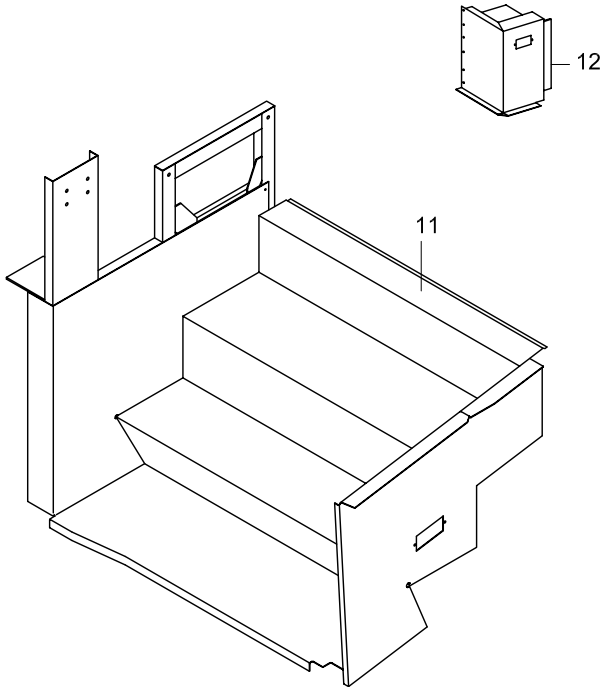

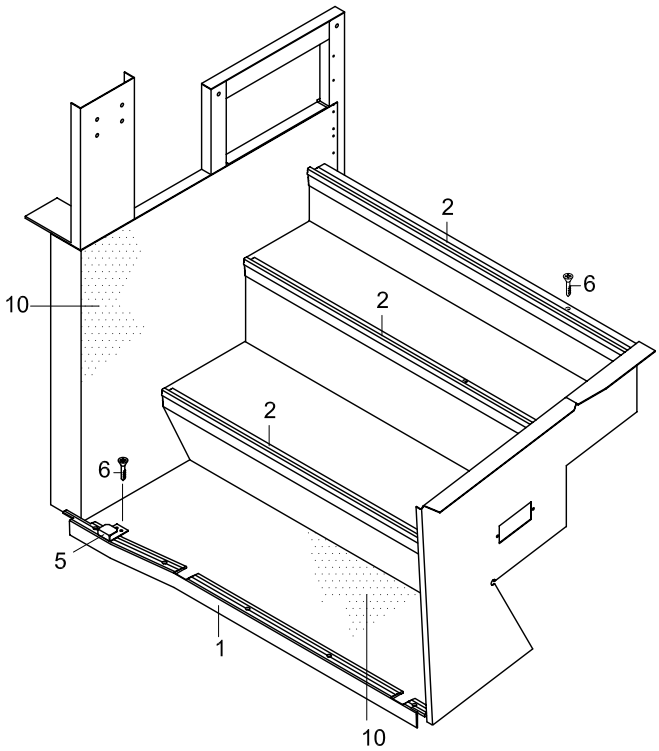

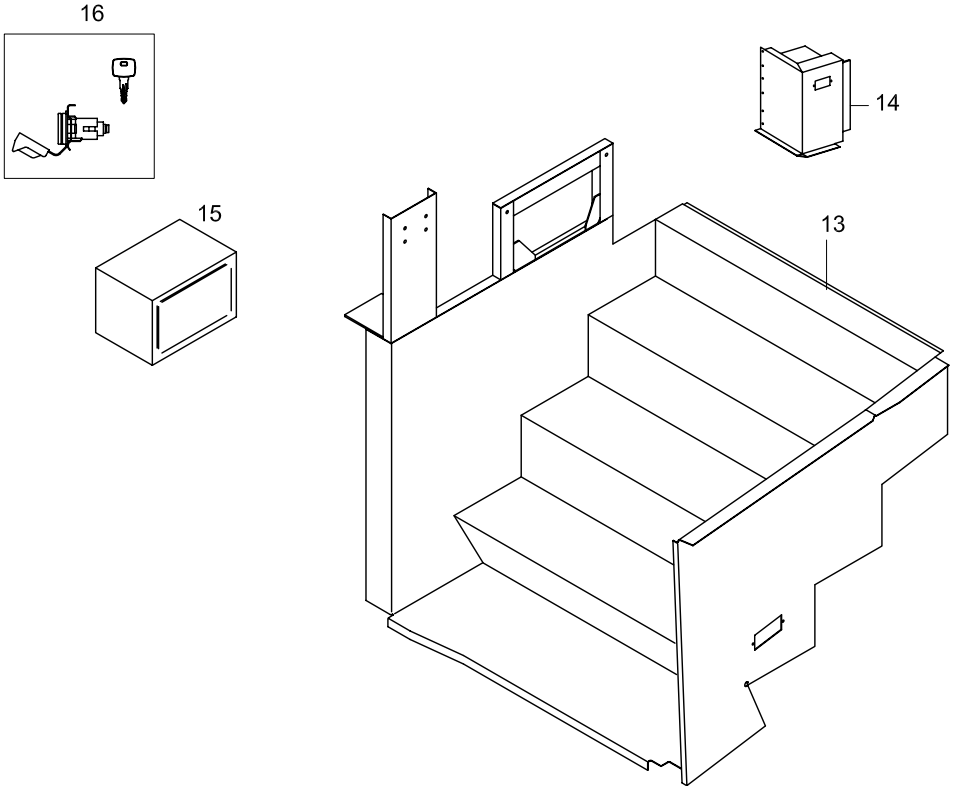
16
15
14
13

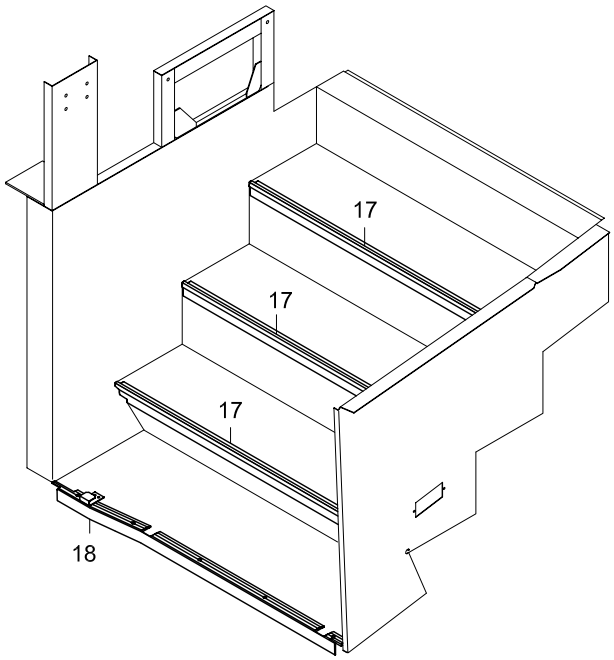
17
17
17
18

TEMSA	Ön basamak Front step Vordere Stufe	Drw.no: Vehicle Model: TB162W, TB162Z, TB162X, TB162Y TB163W, TB163Z, TB163X, TB163Y	33-080 RevDate: Page: 1

Pos	Part Number	Turkish	English	German	Qty	R/P	From	Up To	Original Number Supplier
1	62078-80140-03Y	KENAR ÇITASI	PLATE EDGE		1		1		MC258338-02
2	TU342134Y	KENAR ÇITASI	PLATE EDGE		AR		1		
5	TU342137Y	BRAKET	BRACKET		2		1		
6	MF453628Y	VİDA	SCREW		AR		1		
10	TES40450-14Y	MUŞAMBA	MAT		AR		1		
11	62078-96510-70Y	ÖN BASAMAK KOMPLE	FRONT STEP ASSY		1		1	?	DELETE
11	62078-96520-70Y	ÖN BASAMAK KOMPLE	FRONT STEP ASSY		1		?	200904	
11	62078-96560-70Y	ÖN BASAMAK KOMPLE	FRONT STEP ASSY		1		200904		
12	62078-96500-00Y	ÖN BASAMAK YAN PANELİ	FRONT STEP SIDE CORNER		1		1	200904	
12	62078-96500-01Y	ÖN BASAMAK YAN PANELİ	FRONT STEP SIDE CORNER		1		200904		
13	62078-96570-70Y	ÖN BASAMAK KOMPLE	FRONT STEP ASSY		1		200904		
14	62078-96500-02Y	ÖN BASAMAK YAN PANELİ	FRONT STEP SIDE CORNER		1		200904		
15	62078-96000-03Y	KÜÇÜK KASA	STRONGBOX		1		300604		
16	TY150120Y	KİLİT KÜÇÜK KASA	LOCK STRONGBOX		SET		300604		
17	TU342150Y	KENAR ÇITASI	PLATE EDGE		MT		300604		
18	62078-80140-05Y	KENAR ÇITASI	PLATE EDGE		MT		300604		

TEMSA	Orta basamak Center step Mittlere Stufe	Group No : 33-090 Draw. Num. : x Rev. Date : Page : 1
	Vehicle Model: TB162W, TB162Z, TB163W, TB163Z,	

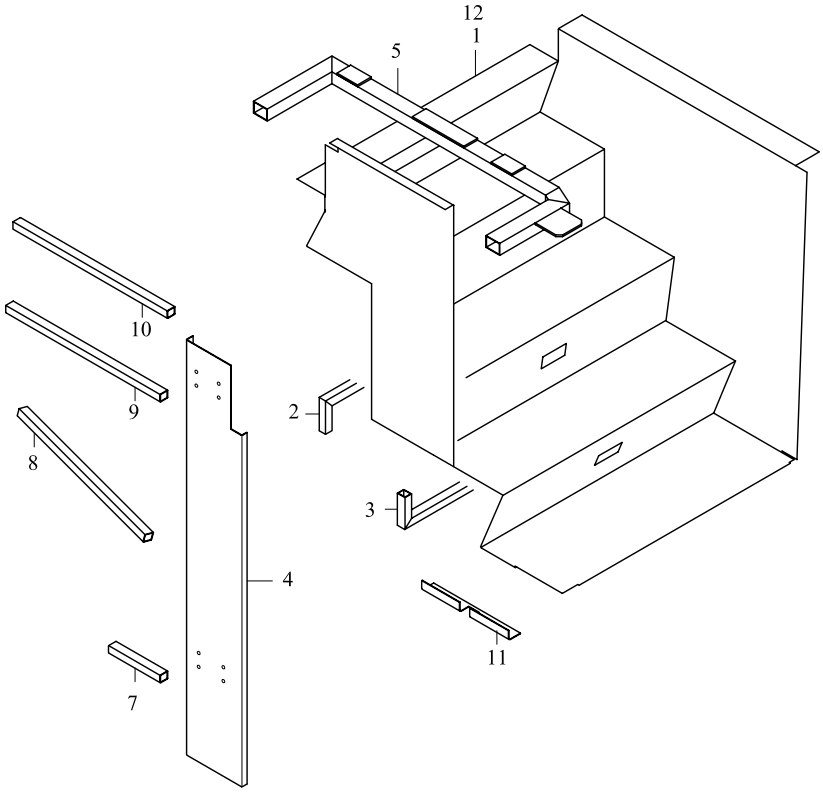

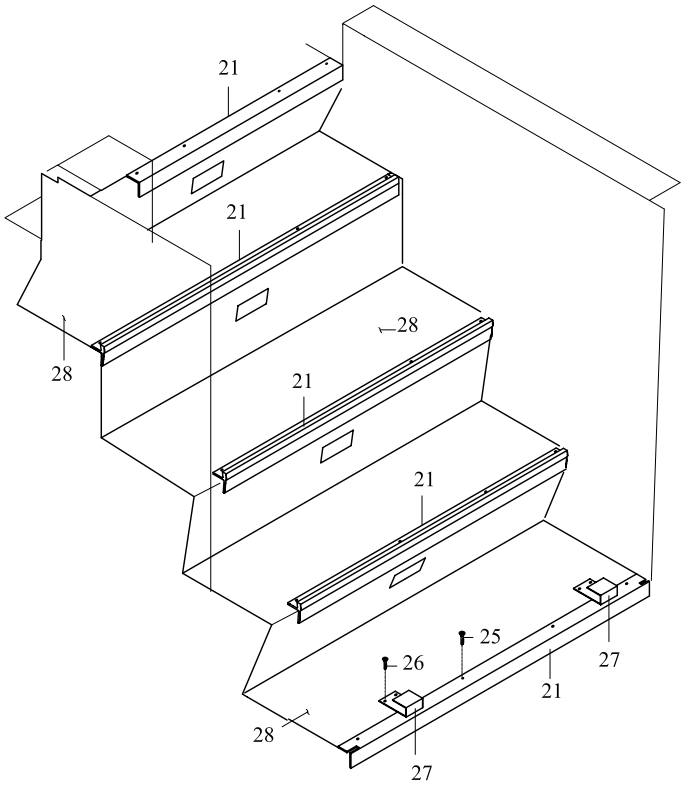

TEMSA	Orta basamak Center step Mittlere Stufe	Drw.no: Vehicle Model: **TB162W, TB162Z** **TB163W, TB163Z**	**33-090** RevDate: Page: 1

Pos	Part Number	Turkish	English	German	Qty	R/P	From	Up To	Original Number Supplier
1	62078-96110-70Y	ORTA BASAMAK KOMPLE	STEP ASSY CENTER		1		1	260504	STANDARD
1	62078-96110-72Y	ORTA BASAMAK KOMPLE	STEP ASSY CENTER		1		260504		STANDARD
1	62078-96000-74Y	ORTA BASAMAK KOMPLE	STEP ASSY CENTER		1		260504		ISRAEL
2	62078-96110-02Y	KUTU PROFİL	PROFILE BOX		1		1		
3	62078-96110-04Y	KUTU PROFİL	PROFILE BOX		1		1		
4	62078-96110-03Y	KUTU PROFİL	PROFILE BOX		1		1		
5	62078-80000-71Y	TABAN DESTEĞİ	SILL		1		1		
7	62078-96110-07Y	KUTU PROFİL	PROFILE BOX		1		1		
8	62078-96110-08Y	KUTU PROFİL	PROFILE BOX		1		1		
9	62078-96110-09Y	KUTU PROFİL	PROFILE BOX		1		1		
10	62078-96110-10Y	KUTU PROFİL	PROFILE BOX		1		1		
11	62078-96110-11Y	PLAKA	PLATE		1		1		
12	62078-96110-73Y	ORTA BASAMAK KOMPLE	STEP ASSY CENTER		1		1	260504	FOR TOILET
12	62078-97110-72Y	ORTA BASAMAK KOMPLE	STEP ASSY CENTER		1		260504		FOR TOILET
21	TU342134Y	KENAR ÇITASI	PLATE EDGE		MT		1	260504	
21	TU342150Y	KENAR ÇITASI	PLATE EDGE		MT		260504		
25	MF453628Y	VİDA	SCREW		AR		1		
26	TF457583Y	VİDA	SCREW		AR		1		
27	TU342137Y	BRAKET	BRACKET		8		1	260504	
28	TES40450-14Y	MUŞAMBA	MAT		AR		1		

TEMSA	Orta basamak Center step Mittlere Stufe	Group No : 33-091 Draw. Num. : x Rev. Date : Page : 1
	Vehlcle Model: TB162X, TB162Y, TB163X, TB163Y	

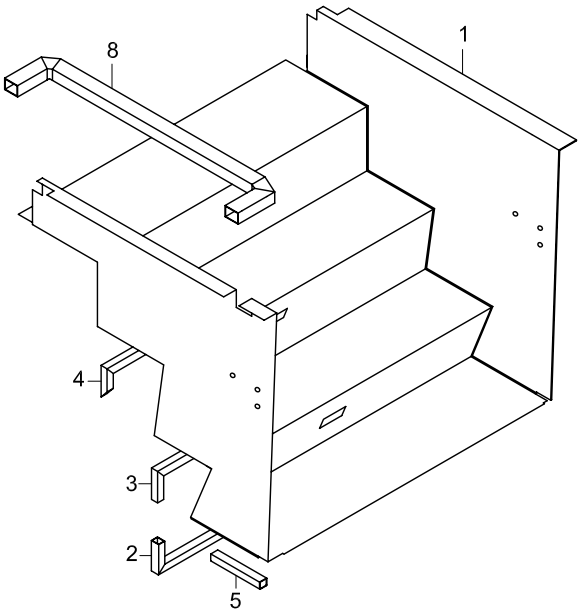

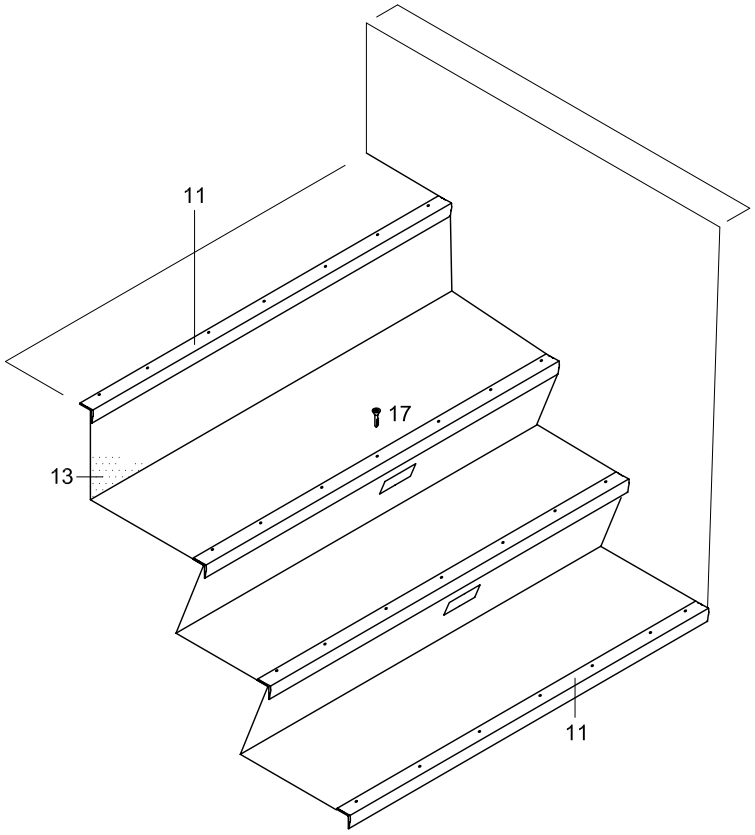

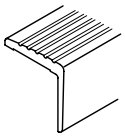

MC258338-02

TEMSA	Orta basamak Center step Mittlere Stufe	Drw.no: Vehicle Model: **TB162X, TB162Y** **TB163X, TB163Y**	**33-091** RevDate: Page: 1

Pos	Part Number	Turkish	English	German	Qty	R/P	From	Up To	Original Number Supplier
1	62078-96410-70Y	ORTA BASAMAK KOMPLE	STEP ASSY CENTER		1		1		
1	62078-96410-71Y	ORTA BASAMAK KOMPLE	STEP ASSY CENTER		1		1		HANDICAP
2	62078-94410-02Y	KUTU PROFİL	PROFILE BOX		1		1		
3	62078-94410-03Y	KUTU PROFİL	PROFILE BOX		1		1		
4	62078-94410-04Y	KUTU PROFİL	PROFILE BOX		1		1		
5	62078-94410-05Y	KUTU PROFİL	PROFILE BOX		2		1		
8	62078-94410-08Y	KUTU PROFİL	PROFILE BOX		1		1		
11	MC258338-02Y	KENAR ÇITASI	PLATE EDGE		AR		1		
13	TES40450-1021Y	MUŞAMBA	MAT		AR		1		
17	TF453615Y	VİDA	SCREW TAPPING		AR		1		4.2*16

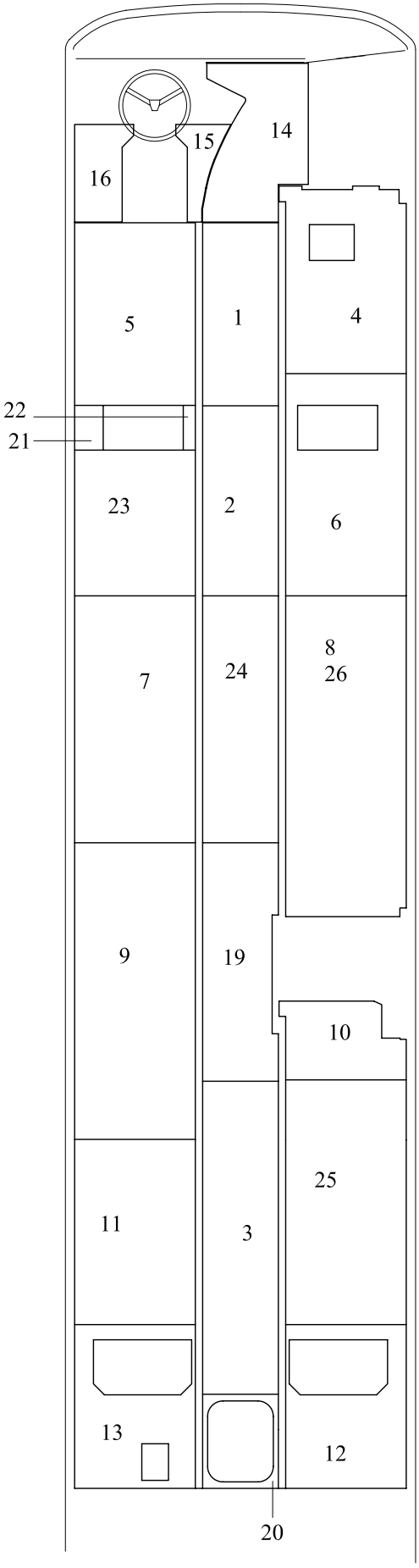
14
15
16
5
1
4
22
21
23
2
6
7
24
8
26
9
19
10
25
11
3
13
12
20

TEMSA	Taban tahtaları Flooring boards Bodenbretter	Drw.no: Vehicle Model: **TB162W** **TB163W**	**33-110** RevDate: Page: 1

Pos	Part Number	Turkish	English	German	Qty	R/P	From	Up To	Original Number Supplier
1	61721-96420-01X	TABAN TAHTA	FLOORING BOARD		1		1		
2	61721-96420-02X	TABAN TAHTA	FLOORING BOARD		1		1		
3	61721-96420-03X	TABAN TAHTA	FLOORING BOARD		1		1		
4	61721-96420-04X	TABAN TAHTA	FLOORING BOARD		1		1		
5	61721-96420-05X	TABAN TAHTA	FLOORING BOARD		1		1		
6	61721-96420-06X	TABAN TAHTA	FLOORING BOARD		1		1		
7	61721-96420-07X	TABAN TAHTA	FLOORING BOARD		1		1		
8	61721-96420-08X	TABAN TAHTA	FLOORING BOARD		1		1		
9	61721-96420-09X	TABAN TAHTA	FLOORING BOARD		1		1		
10	61721-96420-10X	TABAN TAHTA	FLOORING BOARD		1		1		
11	61721-96420-11X	TABAN TAHTA	FLOORING BOARD		1		1		
12	61721-96420-12X	TABAN TAHTA	FLOORING BOARD		1		1		
13	61721-96420-13X	TABAN TAHTA	FLOORING BOARD		1		1		
14	61721-90420-01CX	TABAN TAHTA	FLOORING BOARD		1		1		
15	61721-90420-02X	TABAN TAHTA	FLOORING BOARD		1		1		
16	61721-90420-09X	TABAN TAHTA	FLOORING BOARD		1		1		
19	61721-96420-19X	TABAN TAHTA	FLOORING BOARD		1		1		
20	61721-96420-20X	TABAN TAHTA	FLOORING BOARD		1		1		
21	61721-96420-21X	TABAN TAHTA	FLOORING BOARD		1		1		
22	61721-96420-22X	TABAN TAHTA	FLOORING BOARD		1		1		
23	61721-96420-23X	TABAN TAHTA	FLOORING BOARD		1		1		
24	61721-96420-24X	TABAN TAHTA	FLOORING BOARD		1		1		
25	61721-96420-25X	TABAN TAHTA	FLOORING BOARD		1		1		
26	61721-96420-26X	TABAN TAHTA	FLOORING BOARD		1		1		TOILET OPTION

TEMSA	Taban tahtaları Flooring boards Bodenbretter	Group No : 33-111 Draw. Num. : x Rev. Date : Page : 1
	Vehicle Model: TB162X, TB163Z,	

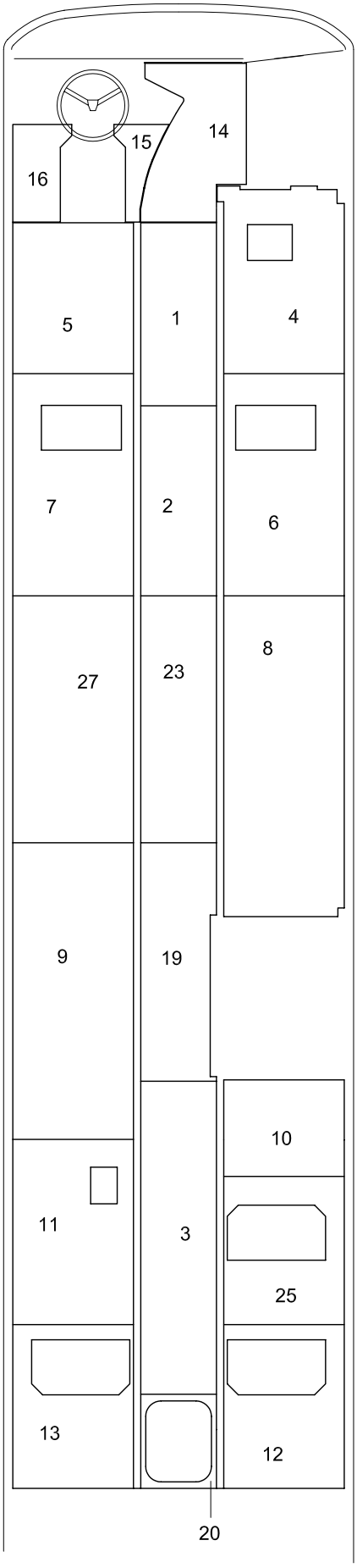

TEMSA	Taban tahtaları Flooring boards Bodenbretter	Drw.no: 61721-98420-70 Vehicle Model: **TB162X** **TB163X**	**33-111** RevDate: Page: 1

Pos	Part Number	Turkish	English	German	Qty	R/P	From	Up To	Original Number Supplier
1	61721-97420-01X	TABAN TAHTA	FLOORING BOARD		1		1		
2	61721-96420-02X	TABAN TAHTA	FLOORING BOARD		1		1		
3	61721-96420-03X	TABAN TAHTA	FLOORING BOARD		1		1		
4	61721-96420-04X	TABAN TAHTA	FLOORING BOARD		1		1		
5	61721-96420-05X	TABAN TAHTA	FLOORING BOARD		1		1		
6	61721-97420-06X	TABAN TAHTA	FLOORING BOARD		1		1		
7	61721-97420-07X	TABAN TAHTA	FLOORING BOARD		1		1		
8	61721-97420-08X	TABAN TAHTA	FLOORING BOARD		1		1		
9	61721-99420-09X	TABAN TAHTA	FLOORING BOARD		1		1		
10	61721-99420-10X	TABAN TAHTA	FLOORING BOARD		1		1		
11	61721-99420-11X	TABAN TAHTA	FLOORING BOARD		1		1		
12	61721-96420-12X	TABAN TAHTA	FLOORING BOARD		1		1		
13	61721-96420-28X	TABAN TAHTA	FLOORING BOARD		1		1		
14	61721-90420-01CX	TABAN TAHTA	FLOORING BOARD		1		1		
15	61721-90420-02X	TABAN TAHTA	FLOORING BOARD		1		1		
16	61721-90420-09X	TABAN TAHTA	FLOORING BOARD		1		1		
19	61721-99420-19X	TABAN TAHTA	FLOORING BOARD		1		1		
20	61721-97420-20X	TABAN TAHTA	FLOORING BOARD		1		1		
23	61721-98420-23X	TABAN TAHTA	FLOORING BOARD		1		1		
24	61721-98420-24X	TABAN TAHTA	FLOORING BOARD		1		1		
25	61721-97420-26X	TABAN TAHTA	FLOORING BOARD		1		1		
27	61721-98420-27X	TABAN TAHTA	FLOORING BOARD		1		1		

TEMSA	Taban tahtaları Flooring boards Bodenbretter	Group No : 33-112 Draw. Num. : x Rev. Date : Page : 1
	Vehicle Model: TB162Z, TB163Z,	

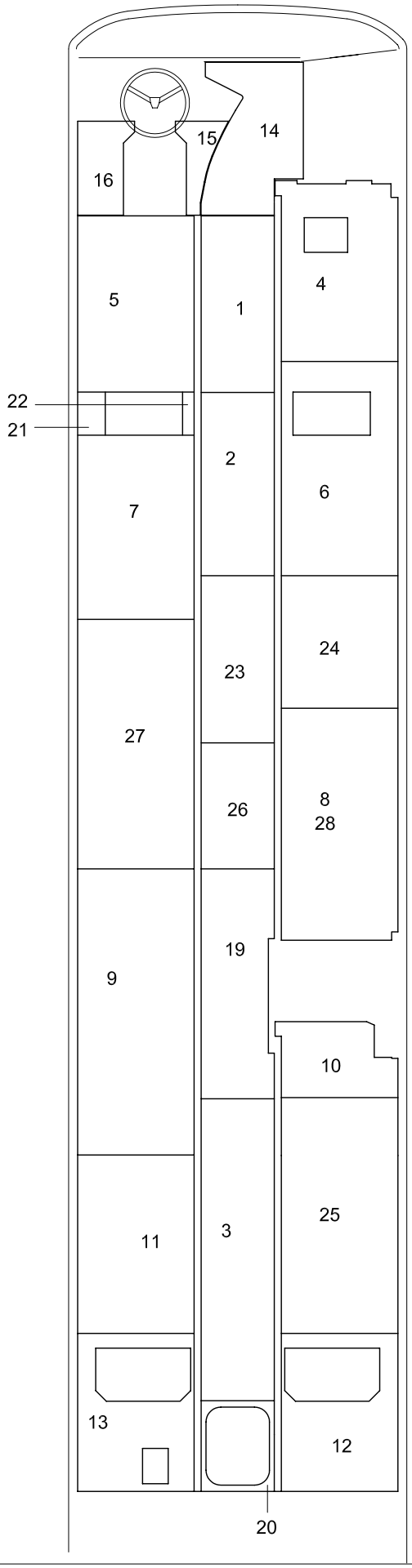

TEMSA	Taban tahtaları Flooring boards Bodenbretter	Drw.no: 61721-98420-70 Vehicle Model: **TB162Z** **TB163Z**	**33-112** RevDate: Page: 1

Pos	Part Number	Turkish	English	German	Qty	R/P	From	Up To	Original Number Supplier
1	61721-96420-01X	TAHTA	BOARD		1		1		
2	61721-96420-24X	TAHTA	BOARD		1		1		
3	61721-96420-03X	TAHTA	BOARD		1		1		
4	61721-96420-04X	TAHTA	BOARD		1		1		
5	61721-96420-05X	TAHTA	BOARD		1		1		
6	61721-97420-06X	TAHTA	BOARD		1		1		
7	61721-97420-07X	TAHTA	BOARD		1		1		
8	61721-97420-08X	TAHTA	BOARD		1		1		
9	61721-97420-09X	TAHTA	BOARD		1		1		
10	61721-96420-10X	TAHTA	BOARD		1		1		
11	61721-96420-11X	TAHTA	BOARD		1		1		
12	61721-96420-12X	TAHTA	BOARD		1		1		
13	61721-96420-13X	TAHTA	BOARD		1		1		
14	61721-90420-01X	TAHTA	BOARD		1		1		
15	61721-90420-02X	TAHTA	BOARD		1		1		
16	61721-90420-09X	TAHTA	BOARD		1		1		
19	61721-97420-19X	TAHTA	BOARD		1		1		
20	61721-96420-20X	TAHTA	BOARD		1		1		
21	61721-96420-21X	TAHTA	BOARD		1		1		
22	61721-96420-22X	TAHTA	BOARD		1		1		
23	61721-97420-23X	TAHTA	BOARD		1		1		
24	61721-97420-24X	TAHTA	BOARD		1		1		
25	61721-96420-25X	TAHTA	BOARD		1		1		
26	61721-97420-26X	TAHTA	BOARD		1		1		
27	61721-97420-27X	TAHTA	BOARD		1		1		
28	61721-97420-28X	TAHTA	BOARD		1		1		TOILET OPTION

TEMSA	Taban tahtaları Flooring boards Bodenbretter	Group No : 33-113 Draw. Num. : x Rev. Date : Page : 1
	Vehicle Model: TB162Y, TB163Y	

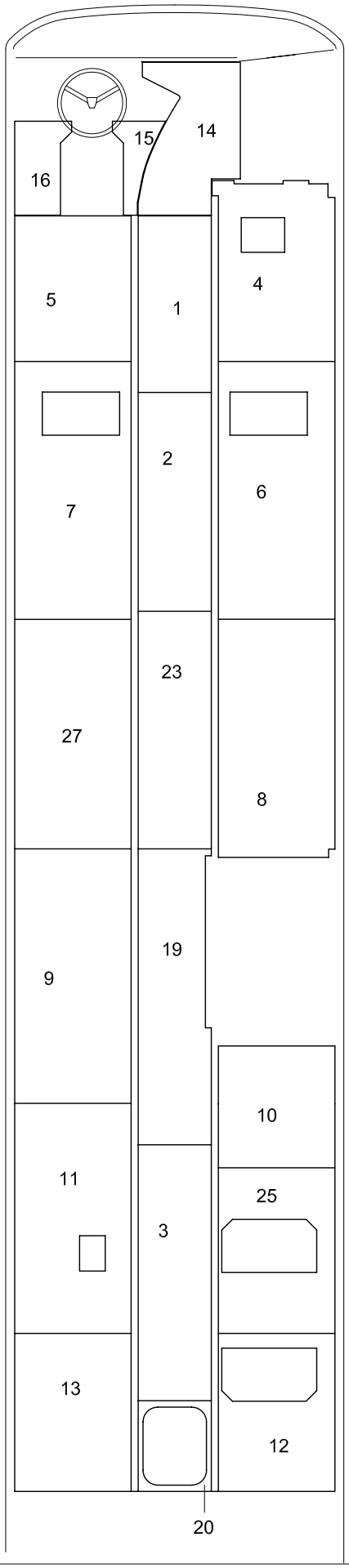

TEMSA	Taban tahtaları Flooring boards Bodenbretter	Drw.no: 61721-98420-70 Vehicle Model: **TB162Y** **TB163Y**	**33-113** RevDate: Page: 1

Pos	Part Number	Turkish	English	German	Qty	R/P	From	Up To	Original Number Supplier
1	61721-97420-01X	TAHTA	BOARD		1		1		
2	61721-97420-25X	TAHTA	BOARD		1		1		
3	61721-97420-03X	TAHTA	BOARD		1		1		
4	61721-96420-04X	TAHTA	BOARD		1		1		
5	61721-97420-05X	TAHTA	BOARD		1		1		
6	61721-97420-06X	TAHTA	BOARD		1		1		
7	61721-97420-07X	TAHTA	BOARD		1		1		
8	61721-99420-08X	TAHTA	BOARD		1		1		
9	61721-99420-09X	TAHTA	BOARD		1		1		
10	61721-99420-10X	TAHTA	BOARD		1		1		
11	61721-99420-11X	TAHTA	BOARD		1		1		
12	61721-96420-12X	TAHTA	BOARD		1		1		
13	61721-96420-28X	TAHTA	BOARD		1		1		
14	61721-90420-01X	TAHTA	BOARD		1		1		
15	61721-90420-02X	TAHTA	BOARD		1		1		
16	61721-90420-09X	TAHTA	BOARD		1		1		
19	61721-99420-19X	TAHTA	BOARD		1		1		
20	61721-97420-20X	TAHTA	BOARD		1		1		
23	61721-99420-23X	TAHTA	BOARD		1		1		
24	61721-97420-24X	TAHTA	BOARD		1		1		
25	61721-97420-26X	TAHTA	BOARD		1		1		
24	61721-97420-24X	TAHTA	BOARD		1		1		
25	61721-97420-26X	TAHTA	BOARD		1		1		
27	61721-99420-27X	TAHTA	BOARD		1		1		

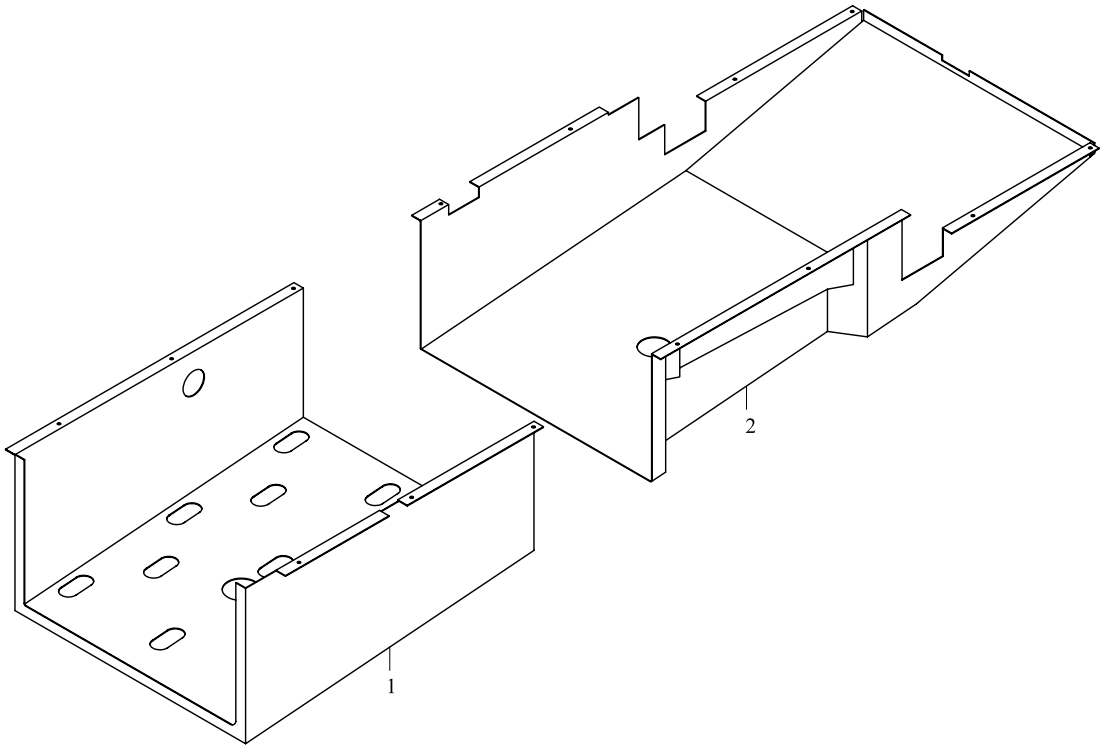
2
1

TEMSA	Motor ve retarder alt muhafazası Engine and retarder under cover Motorschutz, unten	Drw.no: Vehicle Model: **TB162W, TB162Z, TB162X, TB162Y** **TB163W, TB163Z, TB163X, TB163Y**	**33-120** RevDate: Page: 1

Pos	Part Number	Turkish	English	German	Qty	R/P	From	Up To	Original Number Supplier
1	61705-90010-71BY	RETARDER MUHAFAZASI	RETARDER COVER		1		1		
2	61705-90010-73Y	MOTOR ALT MUHAFAZASI	ENGINE BOTTOM COVER		1		1		

34 RÖLE, KABLO ve DİĞER
RELAY, WIRING & OTHER
x

34-010	Akü ve kablo Battery & cable x	TB162W TB163W	TB162Z TB163Z	TB162X TB163X	TB162Y TB163Y
34-020	Ön sigorta paneli Relay panel - front x	TB162W TB163W	TB162Z TB163Z	TB162X TB163X	TB162Y TB163Y
34-030	Arka sigorta paneli Relay panel - rear x	TB162W TB163W	TB162Z TB163Z	TB162X TB163X	TB162Y TB163Y
34-050	Korna ve düdük Horn And Buzzer x	TB162W TB163W	TB162Z TB163Z	TB162X TB163X	TB162Y TB163Y
34-060	Kablo tesisatı Harness Wiring x	TB162W TB163W	TB162Z TB163Z		
34-061	Kablo tesisatı Harness Wiring x				TB162Y TB163Y
34-062	Kablo tesisatı Harness Wiring x			TB162X TB163X	

TEMSA	Akü ve kablo Battery And Cable Batterie und Kabeln	Group No : 34-010 Draw. Num. : x Rev. Date : Page : 1
	Vehicle Model: TB162L - TB162R	

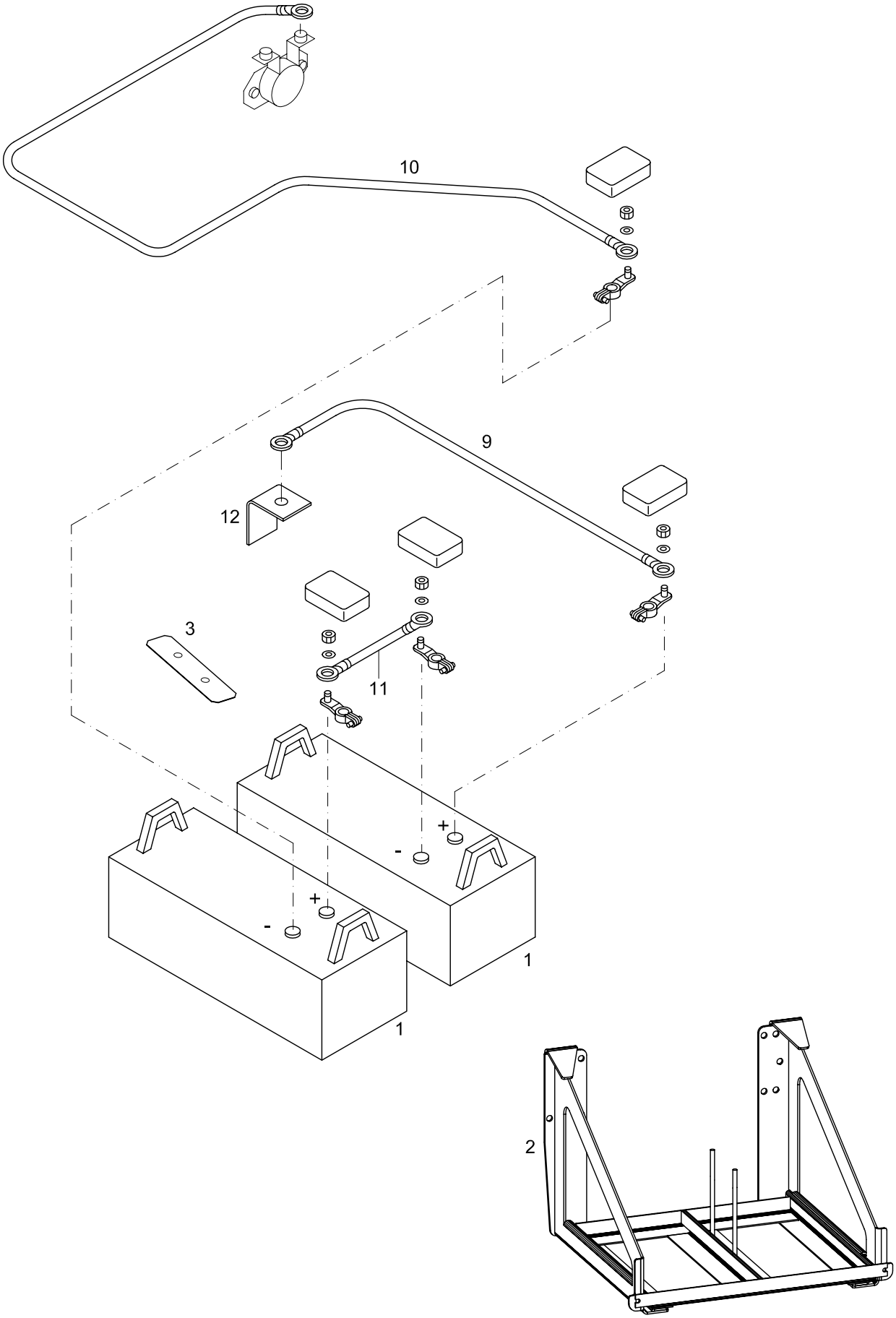

TEMSA	Akü ve kablo Battery & cable Batterie und Kabeln	Drw.no. 64411-90010-70 /64411-94010-70 Vehicle Model: **TB162W, TB162Z, TB162X, TB162Y** **TB163W, TB163Z, TB163X, TB163Y**	**34-010** RevDate: Page: 1

Pos	Part Number	Turkish	English	German	Qty	R/P	From	Up To	Original Number Supplier
1	64411-60039-01Y	AKÜ	BATTERY		2		1		
1	64411-94039-01Y	AKÜ	BATTERY		2		1		option code: BAKU_SECIMI_02
2	64411-90100-70Y	AKÜ SAPORTU	SUPPORT BATTERY		1		1		
3	61711-71319-01Y	PLAKA	KEEPER		1		1		
9	64411-70010-77Y	AKÜ KABLOSU	CABLE BATTERY		1		1		
10	64411-90118-01Y	AKÜ KABLOSU	CABLE BATTERY		1		1		
11	64411-70010-78Y	AKÜ KABLOSU	CABLE BATTERY		1		1		
12	61501-36090-32X	AKÜ ŞASE BRAKETİ	BRACKET BATTERY		1		1		

up to 2004.04.12

HEADLAMP RELAY

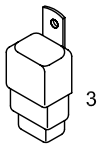

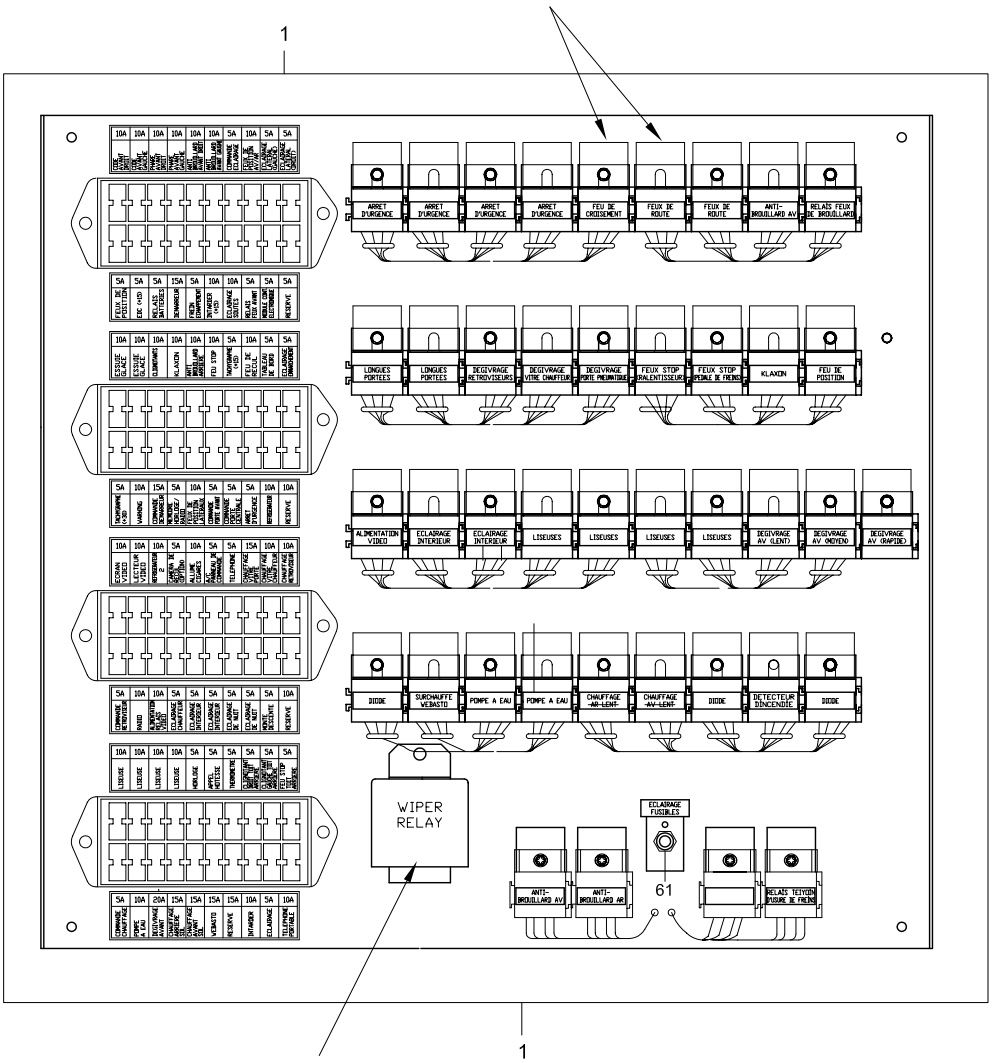

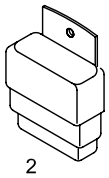

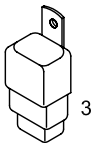

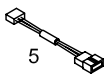

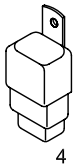

after 2004.04.12

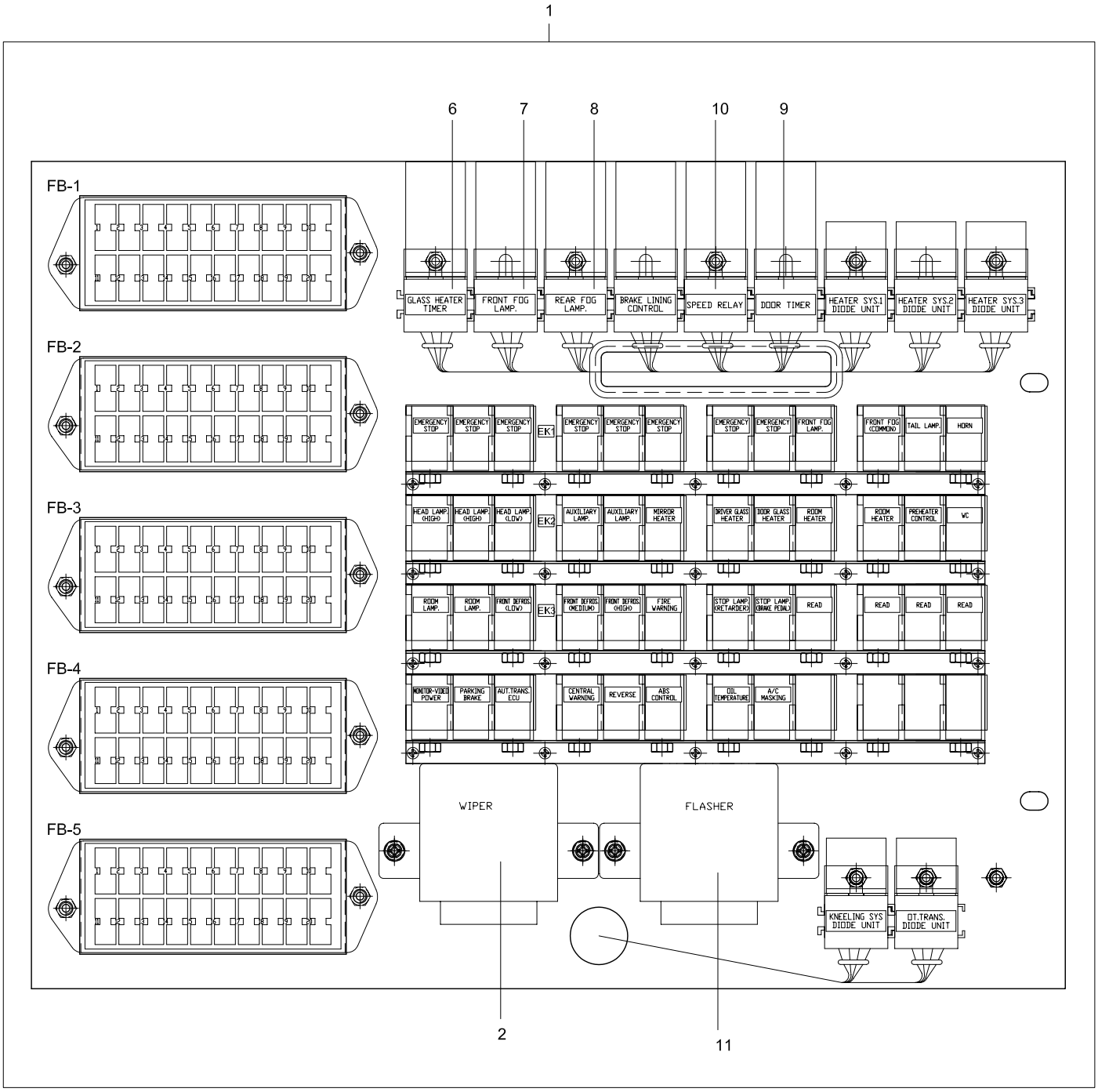

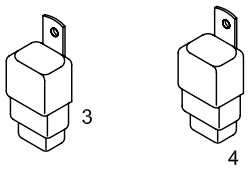

TEMSA	Ön sigorta paneli Relay panel - front Vordere Relaispaneele	Drw.no: Vehicle Model: TB162W, TB162Z, TB162X, TB162Y TB163W, TB163Z, TB163X, TB163Y	34-020 RevDate: Page: 1

Pos	Part Number	Turkish	English	German	Qty	R/P	From	Up To	Original Number Supplier
1	64103-97990-70Y	ÖN RÖLE PANELİ KOMPLE	RELAY PANEL ASSY FRONT		1		1	120404	
1	64103-94993-70Y	ÖN RÖLE PANELİ KOMPLE	RELAY PANEL ASSY FRONT		1		120404		
2	64103-90109-11Y	SİLECEK RÖLESİ	WIPER RELAY		1		1	150604	
2	5WG002450-181	SİLECEK RÖLESİ	WIPER RELAY		1		150604		HELLA
3	64103-70109-01Y	RÖLE (20A)	RELAY 20A		AR		1	120404	
3	PB100004Y	RÖLE (20A)	RELAY 20A		AR		120404		
3	PB100003Y	RÖLE (15A)	RELAY 15A		AR		120404		
3	PB100002Y	RÖLE (10A)	RELAY 10A		AR		120404		
3	PB100001Y	RÖLE (5A)	RELAY 5A		AR		120404		
4	64103-90109-05Y	DİYOD ÜNİTESİ	DIODE UNIT		1		1		
5	TH992011Y	DİRENÇ	RESISTANCE		1		1	120404	
6	TY254159Y	CAM ISITMA RÖLESİ	GLASS HEATER TIMER RELAY		1		120404		
7	64103-70109-02Y	SİS LAMBASI RÖLESİ ÖN	FRONT FOG LAMP RELAY		1		120404		
8	64103-70109-03Y	SİS LAMBASI RÖLESİ ARKA	REAR FOG LAMP RELAY		1		120404		
9	64103-90109-21Y	KAPI ZAMANLAYICI RÖLE	DOOR TIMER RELAY		1		120404		
10	PB100009Y	3 KM/H RÖLESI	SPEED RELAY		1		120404		
11	TM253124	FLAŞÖR RÖLESİ	FLASHER RELAY		1		120404		4DW004513001 HELLA

TEMSA	Arka sigorta paneli Relay Panel - Rear Hintere Relaispaneele	Group No : 34-030 Draw. Num. : x Rev. Date : Page : 1
	Vehicle Model: TB162W, TB162Z, TB162X, TB162Y, TB163W, TB163Z, TB163X, TB163Y	

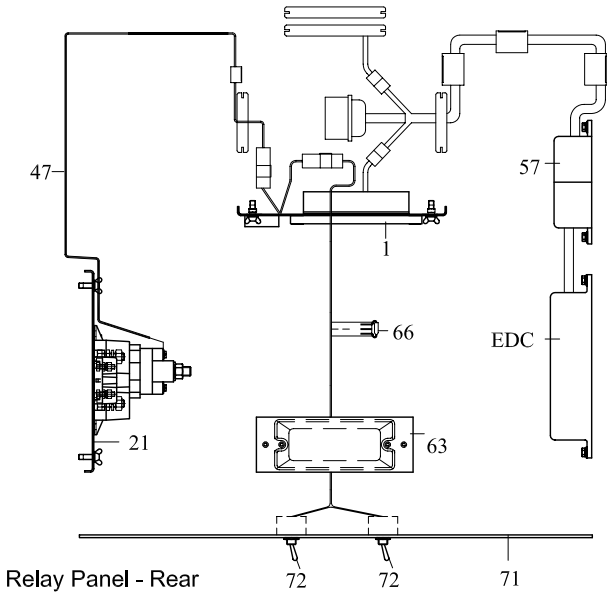

Relay Panel - Rear

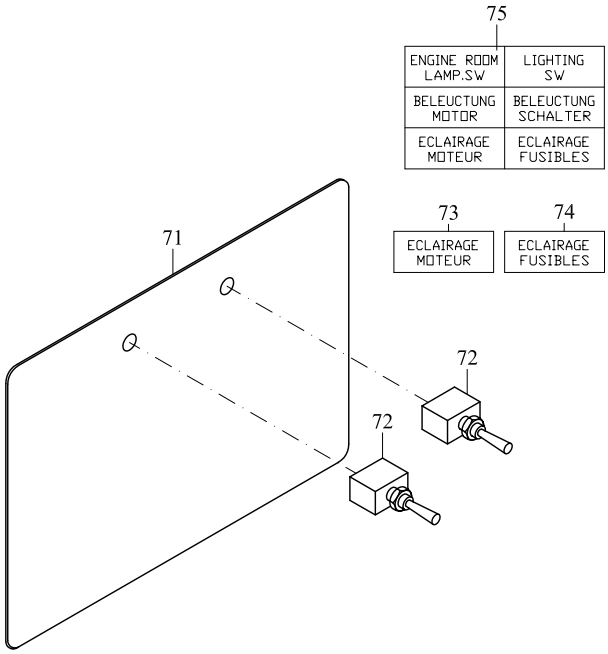

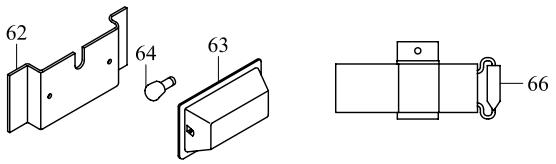

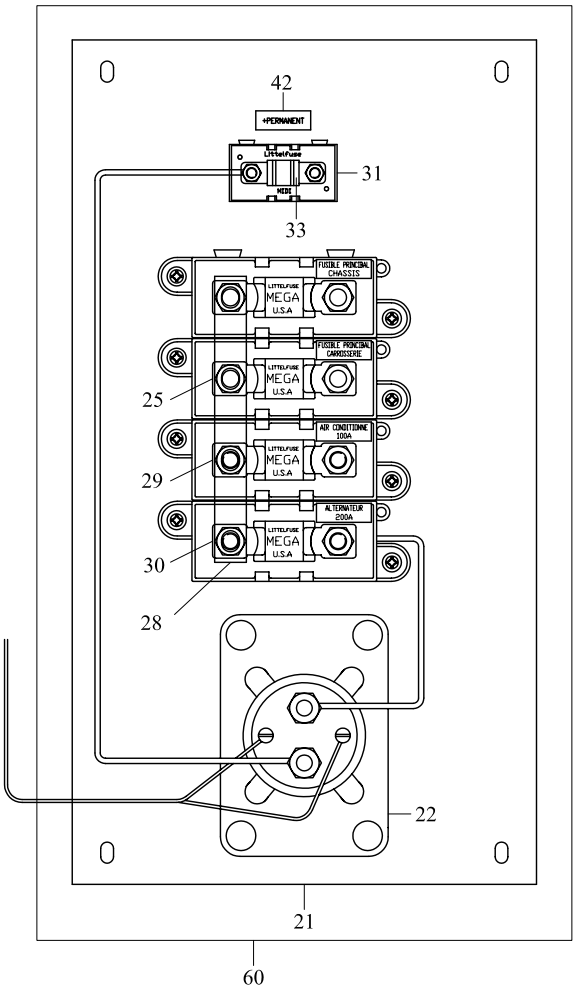

TEMSA	Arka sigorta paneli Relay Panel - Rear Hintere Relaispaneele	Group No : 34-030 Draw. Num. : x Rev. Date : Page : 2
	Vehicle Model: TB162W, TB162Z, TB162X, TB162Y, TB163W, TB163Z, TB163X, TB163Y	

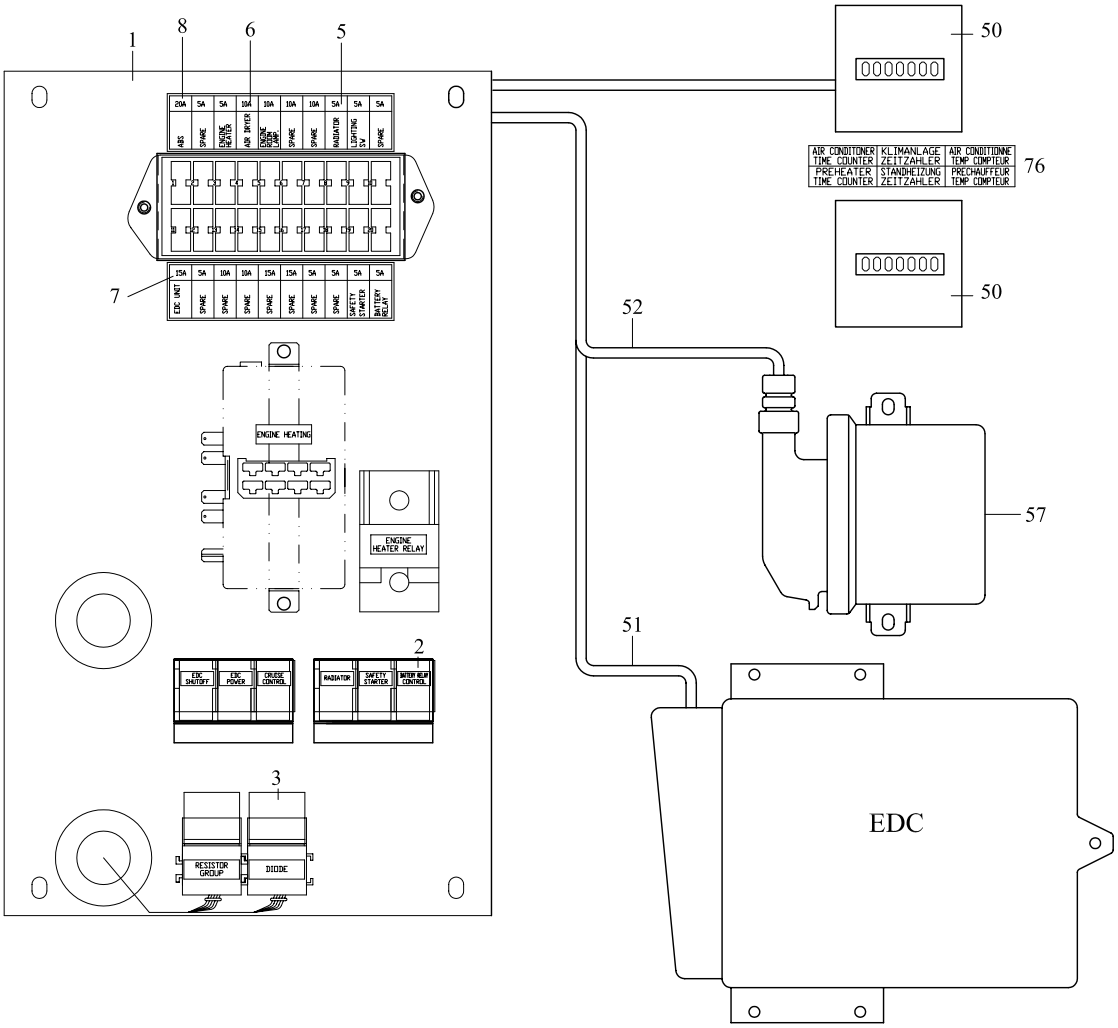

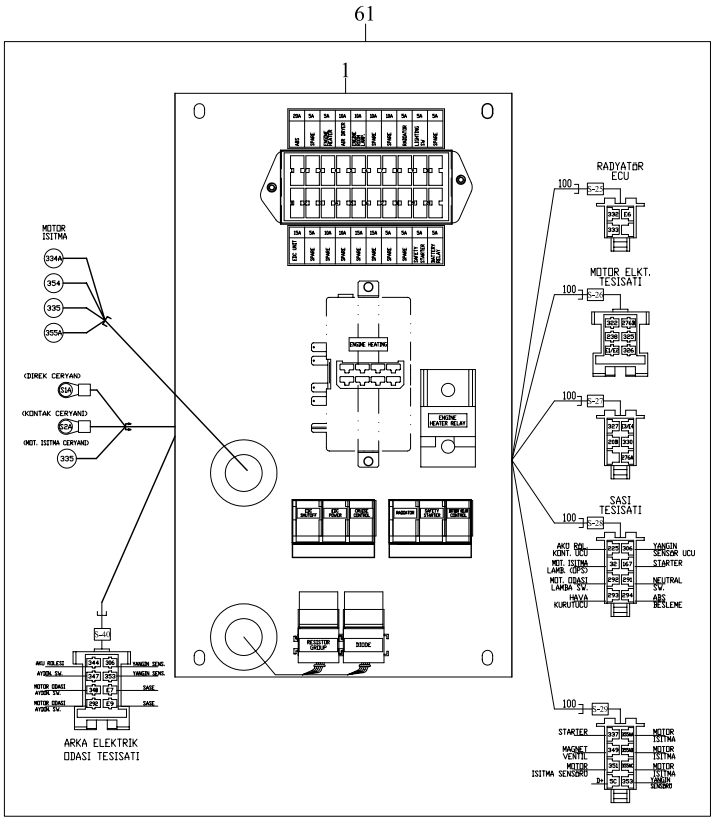

TEMSA	Arka sigorta paneli Relay panel - rear Hintere Relaispaneele	Drw.no: 64372-94130-71 Vehicle Model: TB162W, TB162Z, TB162X, TB162Y TB163W, TB163Z, TB163X, TB163Y	34-030 RevDate: Page: 1

Pos	Part Number	Turkish	English	German	Qty	R/P	From	Up To	Original Number Supplier
1	64103-90980-81Y	RÖLE PANELİ	RELAY PANEL		1		1	120404	
1	64103-91980-83Y	RÖLE PANELİ	RELAY PANEL		1		120404		
2	64103-70109-01Y	RÖLE 20A	FUSE 20A		AR		1	120404	
2	PB100004Y	RÖLE 20A	FUSE 20A		AR		120404		
3	TM254193Y	DİYOT ÜNİTESİ	DIODE UNIT		1		1		
5	64317-70019-02Y	SİGORTA 5A	FUSE 5A		10		1	120404	
5	PB100001Y	SİGORTA 5A	FUSE 5A		10		120404		
6	TS810965Y	SİGORTA 10A	FUSE 10A		6		1		
6	PB100002Y	SİGORTA 10A	FUSE 10A		6		1		
7	64317-70019-01Y	SİGORTA 15A	FUSE 15A		3		1		
7	PB100003Y	SİGORTA 15A	FUSE 15A		3		1		
8	64294-40000-10Y	SİGORTA 20A	FUSE 20A		AR		1	120404	
8	PB100004Y	RÖLE 20A	FUSE 20A		AR		120404		
21	64103-90980-80Y	RÖLE PANELİ	RELAY PANEL		1		1		
22	81.25902-6157	AKÜ RÖLESİ	BATTERY RELAY		1		1		
25	64103-90109-03Y	SİGORTA KUTUSU	FUSE BOX		4		1		
28	64103-90960-80Y	BAKIR BARA	COPPER BAR		1		1		
29	64103-90109-06Y	SİGORTA - 100A	FUSE - 100A		3		1		
30	64103-90109-07Y	SİGORTA - 200A	FUSE - 200A		1		1		
31	TM255125Y	SİGORTA KUTUSU	FUSE BOX		1		1		
33	TM255146Y	SİGORTA 50A	FUSE 50A		1		1		
47	64406-91230-70Y	MOTOR ELEKTRİK TESİSATI	ENGINE HARNESS WIRING		1		1		
50	PB100006Y	ÖN ISITICI SAATİ SAYACI	PREHEATER TIMER COUNTER		1		1		
51	64406-91030-80Y	MOTOR ECU	ENGINE HARNESS ECU		1		1		
52	64406-91100-70Y	RADYATÖR ECU KABLOSU	ECU CABLE RADIATOR		1		1		
57	81.25435-6494	RADYATÖR ECU	ECU RADIATOR		1		1		
60	64103-91980-81Y	ARKA RÖLE PANELİ	PANEL ASSY RELAY REAR		1		1	120404	
60	64103-90980-83Y	ARKA RÖLE PANELİ	PANEL ASSY RELAY REAR		1		120404		
61	64103-90980-84Y	ARKA RÖLE PANELİ KOMP	RELAY PANEL ASSY REAR		1		1	120404	
61	64103-90980-87Y	ARKA RÖLE PANELİ KOMP	RELAY PANEL ASSY REAR		1		120404		
62	TU252124AY	LAMBA KAİDESİ	BASE LAMP		1		1		
63	TU252106Y	BAGAJ LAMBASI	TURUNK ROOM LAMP		1		1		
64	MF820185Y	AMPUL	BULB		1		1		
66	TM255152Y	YANGIN İKAZ SENSÖRÜ	FIRE WARNINIG SENSORY		1		1		
71	64372-90140-01AY	KAPAK	COVER		1		1		

TEMSA	Arka sigorta paneli Relay panel - rear Hintere Relaispaneele	Drw.no: Vehicle Model: TB162W, TB162Z, TB162X, TB162Y TB163W, TB163Z, TB163X, TB163Y	34-030 RevDate: Page: 2

Pos	Part Number	Turkish	English	German	Qty	R/P	From	Up To	Original Number Supplier
72	MA276132Y	SİVİÇ	SWITCH		2		1	120404	
72	TV254141Y	SİVİÇ	SWITCH		2		120404		
73	64103-90982-30Y	SİVİÇ ETİKETİ	SWITCH LABEL		1		1	120404	
74	64103-90982-29Y	SİVİÇ ETİKETİ	SWITCH LABEL		1		1	120404	
75	64103-90982-52Y	SİVİÇ ETİKETİ	SWITCH LABEL		1		120404		
76	64103-90982-53Y	ETİKET	LABEL		1		120404		

TEMSA	Korna ve düdük Horn and buzzer Hupe und Pfeife	Group No : 34-050 Draw. Num. : x Rev. Date : Page : 1
	Vehicle Model: TB162W, TB162Z, TB162X, TB162Y, TB163W, TB163Z, TB163X, TB163Y	

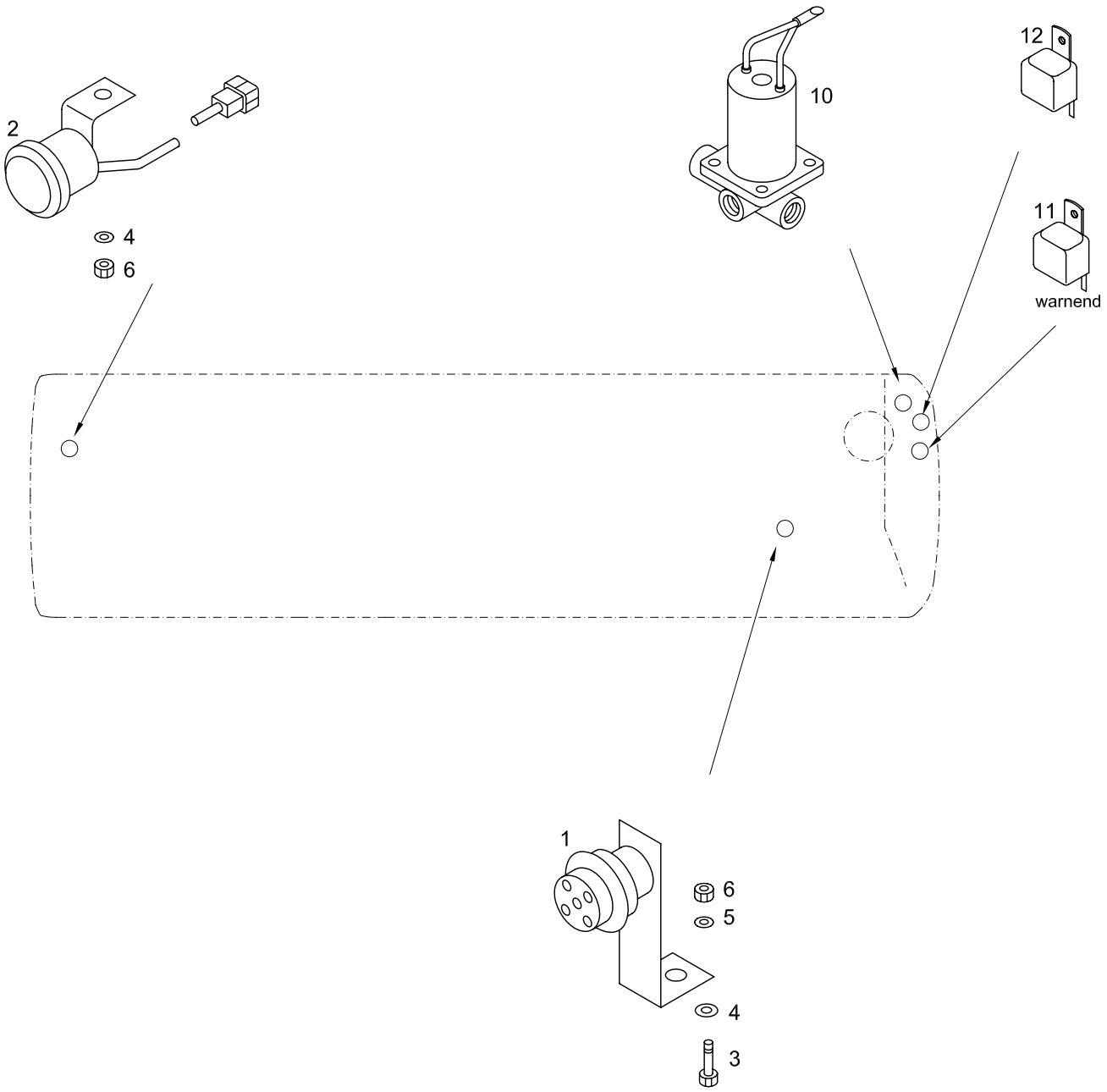

TEMSA	Korna ve düdük Horn and buzzer Hupe und Pfeife	Drw.no: Vehicle Model: **TB162W, TB162Z, TB162X, TB162Y** **TB163W, TB163Z, TB163X, TB163Y**	**34-050** RevDate: Page: 1

Pos	Part Number	Turkish	English	German	Qty	R/P	From	Up To	Original Number Supplier
1	61101-36170-07Y	ELEKTRİKLİ KORNA	ELECRICAL HORN		2		1		
2	74139-60020-73Y	GERİ VİTES İKAZ DÜDÜĞÜ	BACK BUZZER		1		1		
3	MF100053Y	CIVATA	BOLT		AR		1		M8*1.25*16
4	MF450405Y	RONDELA	WASHER SPRING		AR		1		A8
5	MF450005Y	PUL	WASHER PLAIN		AR		1		A8.5
6	MF430005Y	SOMUN	NUT		AR		1		M8
10	TM254132Y	ZİL	BUZZER		1		1		
11	PB100008Y	ZİL -TEHLİKE DÜŞÜK	BUZZER - WARNED		1		1		
12	3SB003985-021	ZİL	BUZZER		1		1		

TEMSA	Kablo tesisatı Harness Wiring Kabel Anlagen	Group No : 34-060 Draw. Num. : x Rev. Date : Page : 1
	Vehicle Model: TB162W, TB162Z, TB163W, TB163Z,	

TB162W
TB163W

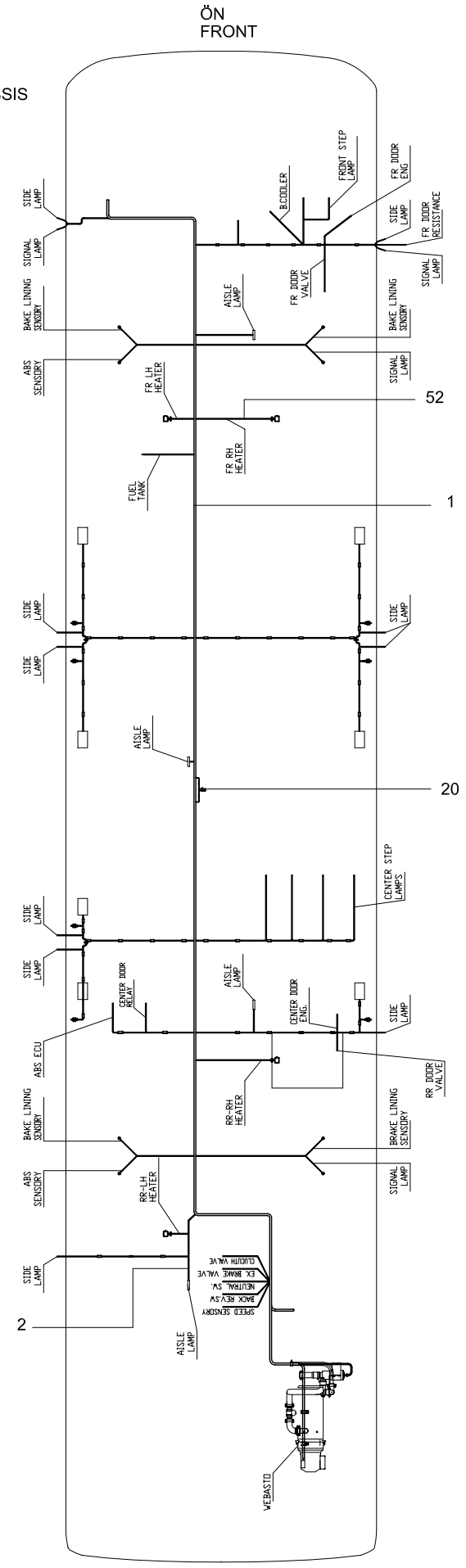

TB162Z
TB163Z

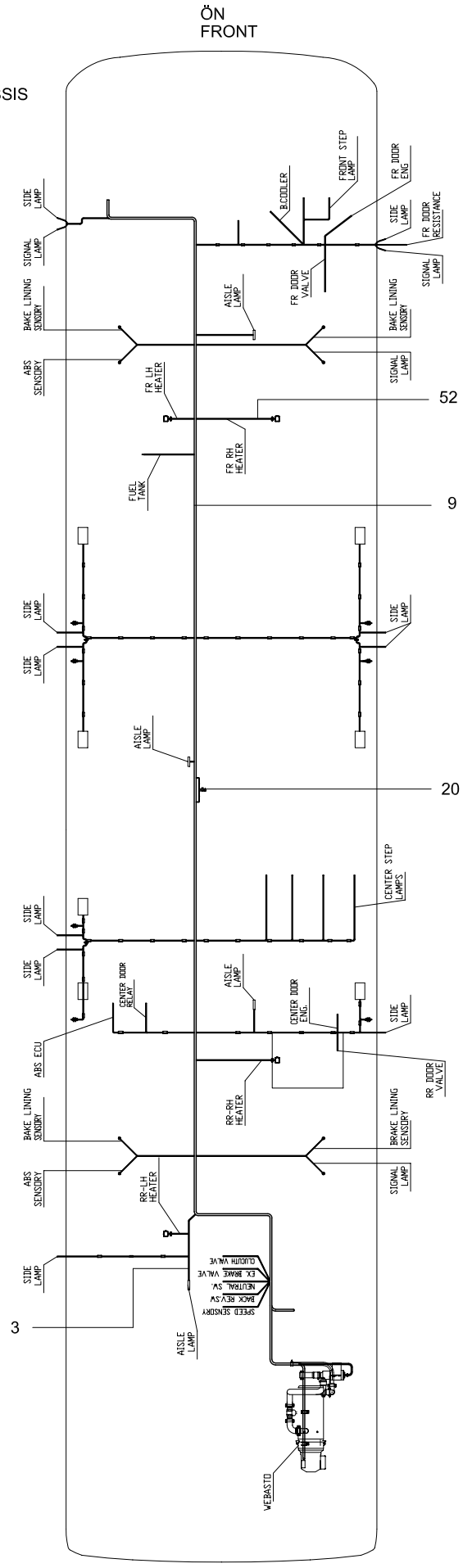

TEMSA	Kablo tesisatı Harness Wiring Kabel Anlagen	Group No : 34-060 Draw. Num. : x Rev. Date : Page : 2
	Vehicle Model: TB162W, TB162Z, TB163W, TB163Z,	

TB162W
TB163W

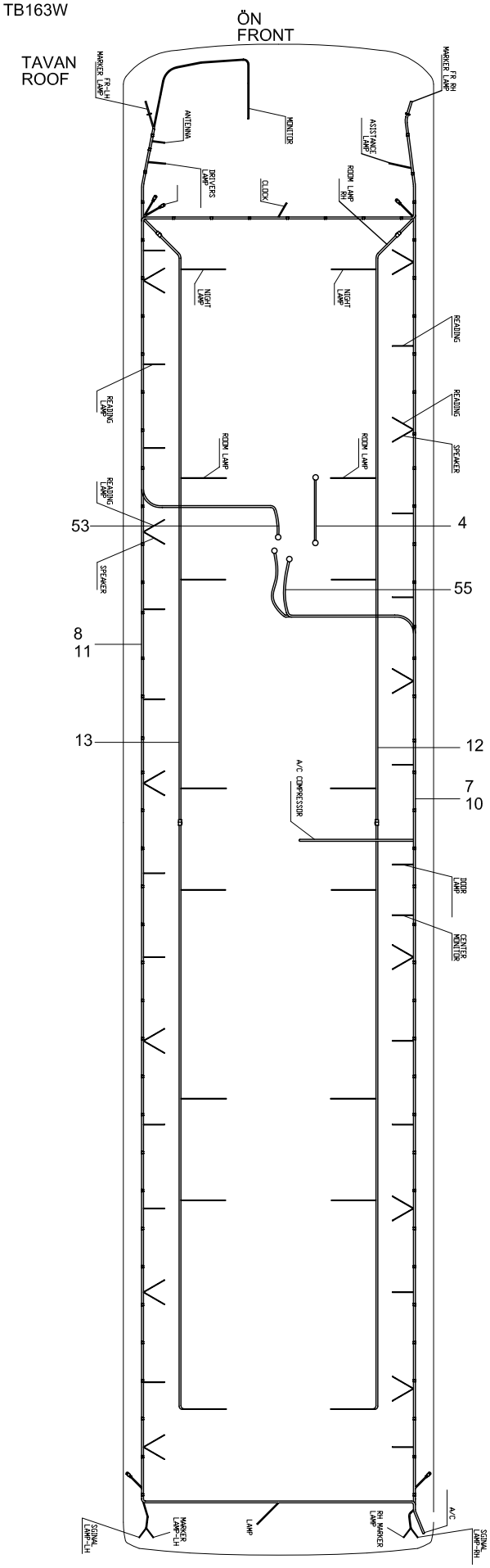

TB162Z
TB163Z

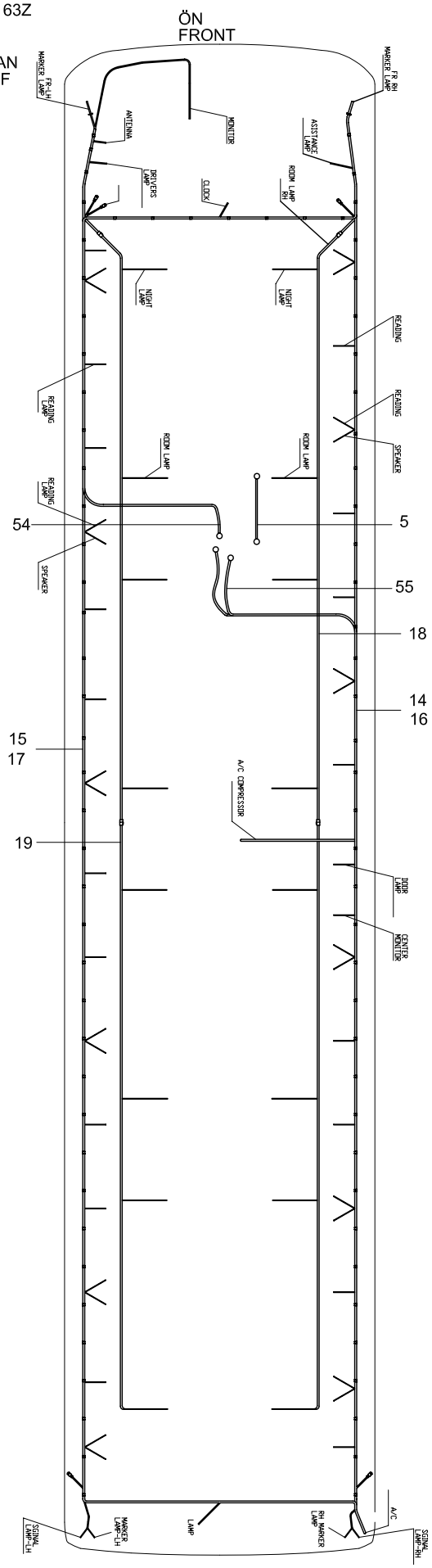

TB162W -TB162Z
TB163W -TB163Z

ARKA GÖVDE
REAR BODY

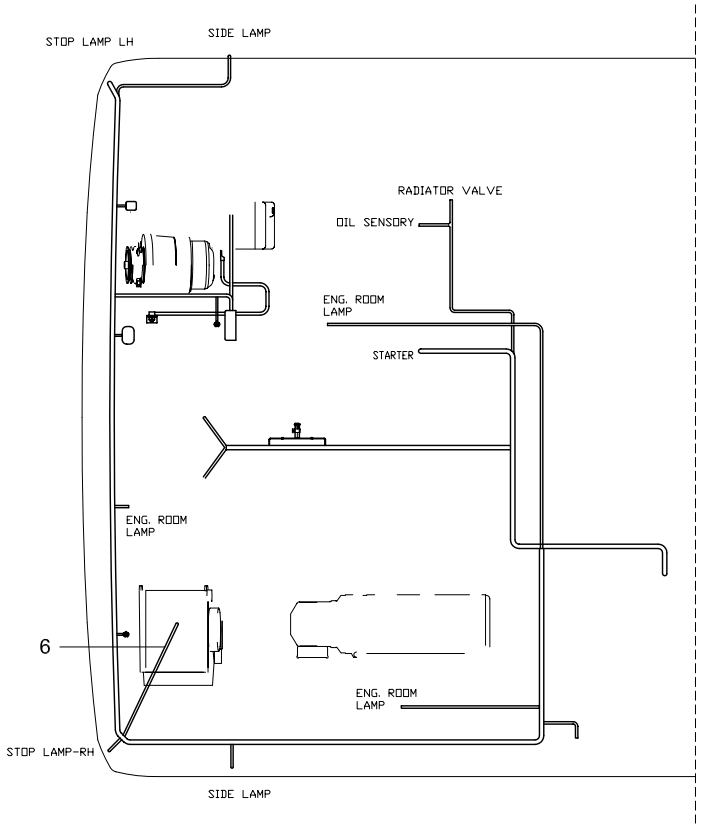

TB162W -TB162Z
TB163W -TB163Z

ÖN GÖVDE
FRONT BODY

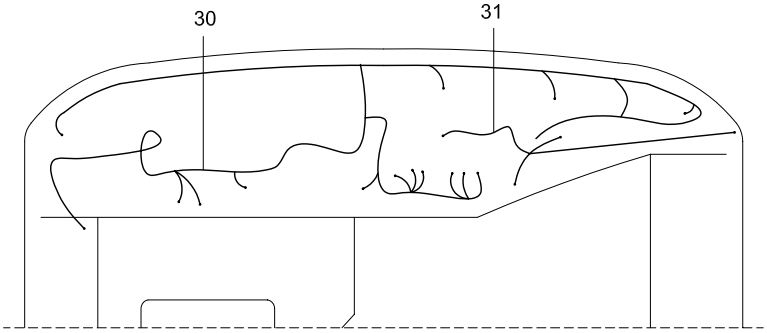

TEMSA	Kablo tesisatı Harness wring Kabel Anlagen	Drw.no: Vehicle Model: **TB162W, TB162Z** **TB163W, TB163Z**	**34-060** RevDate: Page: 1

Pos	Part Number	Turkish	English	German	Qty	R/P	From	Up To	Original Number Supplier
1	64406-91020-80Y	ŞASİ KABLO TESİSATI	HARNESS CHASSIS WIRING		1		1		TB162W -TB163W
2	64406-91050-80Y	KORİD.BASAMAK,KAPI KABLOSU	AISLE,STEP,DOOR HARN WIRING		1		1		TB162W -TB163W
3	64406-94050-80Y	KORİD.BASAMAK,KAPI KABLOSU	AISLE,STEP,DOOR HARNESS WIR		1		1		TB162Z - TB163Z
4	64406-90040-80Y	ŞASİ BESLEME KABLOSU	HARNESS WIRING- GROUND		1		1		TB162W -TB163W
5	64406-94040-80Y	ŞASİ BESLEME KABLOSU	HARNESS WIRING- GROUND		1		1		TB162Z - TB163Z
6	64406-94120-70Y	KLİMA KOMPRESÖRÜ KABLOSU	A/C COMPRESSOR HARNESS		1		1	140704	TB162W -TB163W TB162Z - TB163Z
6	64406-97120-70Y	KLİMA KOMPRESÖRÜ KABLOSU	A/C COMPRESSOR HARNESS		1		140704		TB162W -TB163W TB162Z - TB163Z
7	64422-91036-70Y	TAVAN KABLOSU SAĞ	ROOF WIRING RH		1		1		TB162W -TB163W
8	64422-91026-70Y	TAVAN KABLOSU SOL	ROOF WIRING LH		1		1		TB162W -TB163W
9	64406-94040-80Y	ŞASİ KABLO TESİSATI	HARNESS CHASSIS WIRING		1		1		TB162Z
10	64422-91047-70Y	HOPARLÖR KABLOSU SAĞ	SPEAKER WIRING RH		1		1		TB162W -TB163W
11	64422-91057-70Y	HOPARLÖR KABLOSU SOL	SPEAKER WIRING LH		1		1		TB162W -TB163W
12	64422-91037-71Y	SAĞ İÇ AYD. KABLO TES.	HARNEES ROOM LAMP RH		1		1		TB162W -TB163W
13	64422-91037-72Y	SOL İÇ AYD KABLO TES	HARNESS ROOM LAMP LH		1		1		TB162W -TB163W
14	64422-97036-70Y	TAVAN KABLOSU SAĞ	ROOF WIRING RH		1		1		TB162Z - TB163Z
15	64422-97026-70Y	TAVAN KABLOSU SOL	ROOF WIRING LH		1		1		TB162Z - TB163Z
16	64422-97047-70Y	HOPARLÖR KABLOSU SAĞ	SPEAKER WIRING RH		1		1		TB162Z - TB163Z
17	64422-97057-70Y	HOPARLÖR KABLOSU SOL	SPEAKER WIRING LH		1		1		TB162Z - TB163Z
18	64422-97037-71Y	SAĞ İÇ AYD. KABLO TES.	HARNESS ROOM LAMP		1		1		TB162Z - TB163Z
19	64422-97037-72Y	SOL İÇ AYD . KABLO TES.	HARNESS ROOM LAMP		1		1		TB162Z - TB163Z
20	TM255152Y	YANGIN İKAZ SENSÖRÜ	FIRE WARNINIG SENSORY		1		1		TB162W -TB163W TB162Z - TB163Z
30	64406-97010-80Y	ÖN GÖVDE KABLOSU	FRONT BODY HARNESS WIRING		1		1	150904	TB162W -TB163W TB162Z - TB163Z
30	64406-94010-82Y	ÖN GÖVDE KABLOSU	FRONT BODY HARNESS WIRING		1		150904		TB162W-TB162Z manual transmission
30	64406-95000-72Y	ÖN GÖVDE KABLOSU	FRONT BODY HARNESS WIRING		1		150904		TB162/3W-TB162/3Z automatic transmission
31	64406-91110-70Y	HIZ KONTROL KABLOSU	CRUISE CONTROL CABLE		1		1		TB162/3W-TB162/3Z option
52	64406-97060-80Y	KALORİFER ELK TES	HEATER HARNESS WIRING		1		1		TB162W -TB163W TB162Z - TB163Z
53	62305-94020-03Y	A/C BESLEME KABLOSU	A/C HARNESSIS WIRING		1		1	011004	TB162W -TB163W
53	62305-97020-03Y	A/C BESLEME KABLOSU	A/C HARNESSIS WIRING		1		011004		TB162W -TB163W
54	62305-97020-03Y	A/C BESLEME KABLOSU	A/C HARNESSIS WIRING		1		1		TB162Z - TB163Z
55	64406-91020-01Y	KLİMA KONTROL KABLOSU	A/C HARNESSIS WIRING		1		1	140704	TB162W -TB163W TB162Z - TB163Z
55	64406-97120-70Y	KLİMA KONTROL KABLOSU	A/C HARNESSIS WIRING		1		140704		TB162W -TB163W TB162Z - TB163Z

TEMSA	Kablo tesisatı Harness Wiring Kabel Anlagen	Group No : 34-061 Draw. Num. : x Rev. Date : Page : 1
	Vehicle Model: TB162Y, TB163Y	

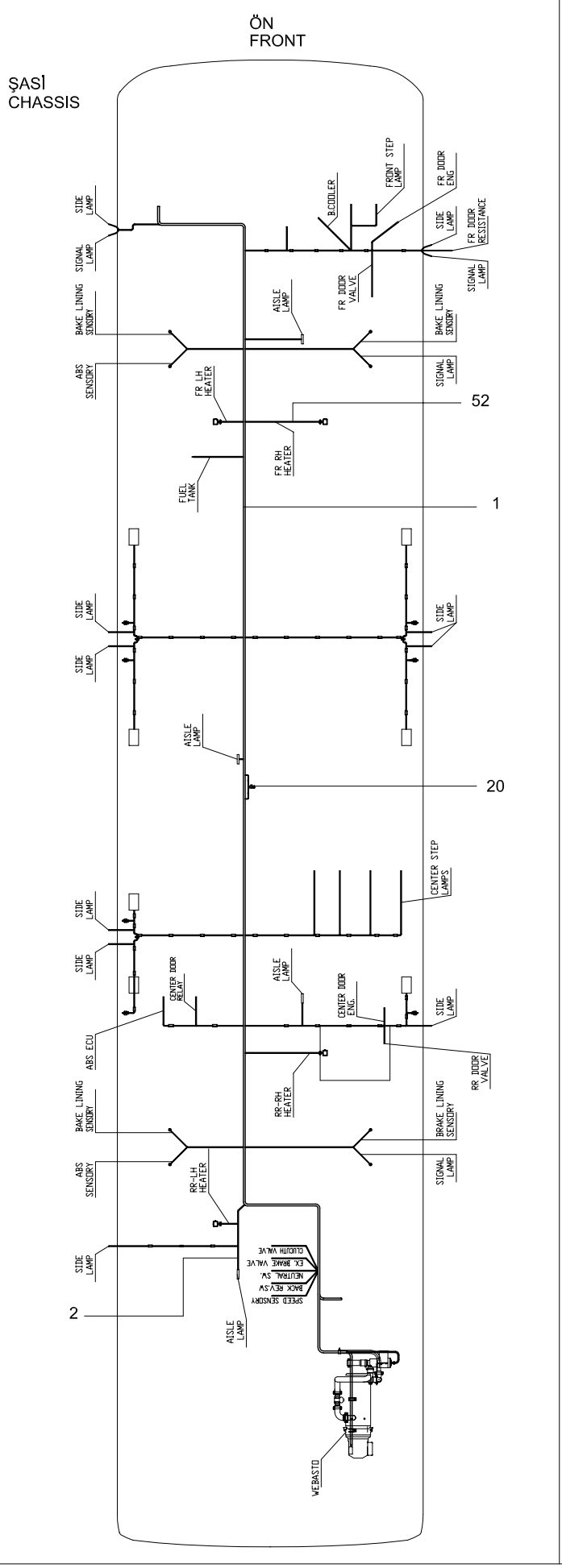

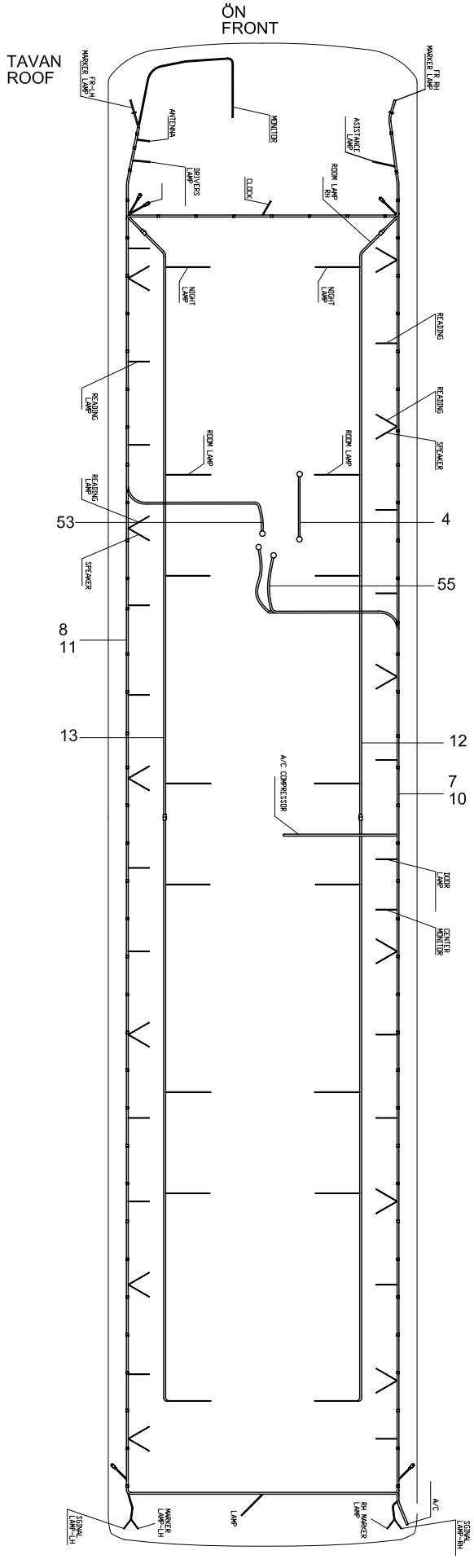

ARKA GÖVDE
REAR BODY

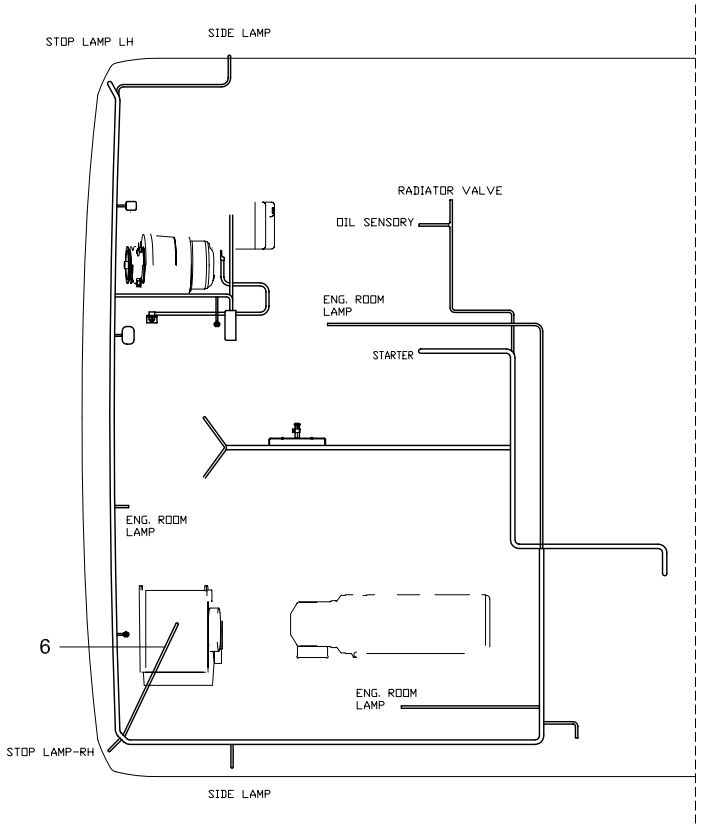

ÖN GÖVDE
FRONT BODY

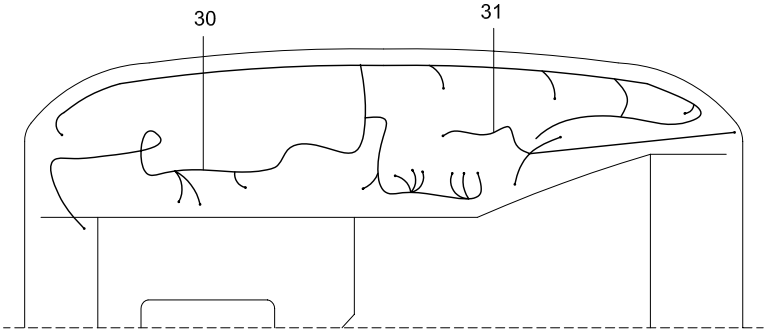

TEMSA	Kablo tesisatı Harness wring Kabel Anlagen	Drw.no: Vehicle Model: **TB162Y** **TB163Y**	**34-061** RevDate: Page: 1

Pos	Part Number	Turkish	English	German	Qty	R/P	From	Up To	Original Number Supplier
1	64406-94020-91Y	ŞASİ KABLO TESİSATI	HARNESS CHASSIS WIRING		1		1		TB162Y-TB163Y
2	64406-94050-82Y	KORİD.BASAMAK,KAPI KABLOSU	AISLE,STEP,DOOR HARN WIRING		1		1		TB162Y-TB163Y
4	64406-94040-80Y	ŞASİ BESLEME KABLOSU	HARNESS WIRING-GROUND		1		1		TB162Y-TB163Y
6	64406-97120-70Y	KLİMA KOMPRESÖRÜ KABLOSU	A/C COMPRESSOR HARNESS		1		1		TB162Y-TB163Y
7	64422-97036-71Y	TAVAN KABLOSU SAĞ	ROOF WIRING RH		1		1		TB162Y-TB163Y
8	64422-97026-71Y	TAVAN KABLOSU SOL	ROOF WIRING LH		1		1		TB162Y-TB163Y
10	64422-97147-71Y	HOPARLÖR KABLOSU SAĞ	SPEAKER WIRING RH		1		1		TB162Y-TB163Y
11	64422-97157-71Y	HOPARLÖR KABLOSU SOL	SPEAKER WIRING LH		1		1		TB162Y-TB163Y
12	64422-97037-71Y	SAĞ İÇ AYD. KABLO TES.	HARNEES ROOM LAMP RH		1		1		TB162Y-TB163Y
13	64422-97037-72Y	SOL İÇ AYD KABLO TES	HARNESS ROOM LAMP LH		1		1		TB162Y-TB163Y
20	TM255152Y	YANGIN İKAZ SENSÖRÜ	FIRE WARNINIG SENSORY		1		1		TB162Y-TB163Y
30	64406-94010-81Y	ÖN GÖVDE KABLOSU	FRONT BODY HARNESS WIRING		1		1		TB162Y-TB163Y
31	64406-91110-70Y	HIZ KONTROL KABLOSU	CRUISE CONTROL CABLE		1		1		TB162Y-TB163Y
52	64406-97060-80Y	KALORİFER ELK TES	HEATER HARNESS WIRING		1		1		TB162Y-TB163Y
53	62305-97020-03Y	A/C BESLEME KABLOSU	A/C HARNESSIS WIRING		1		1		TB162Y-TB163Y
55	64406-91020-01Y	KLİMA KONTROL KABLOSU	A/C HARNESSIS WIRING		1		1		TB162Y-TB163Y

TEMSA	Kablo tesisatı Harness Wiring Kabel Anlagen	Group No : 34-062 Draw. Num. : x Rev. Date : Page : 1
	Vehicle Model: TB162X, TB163X,	

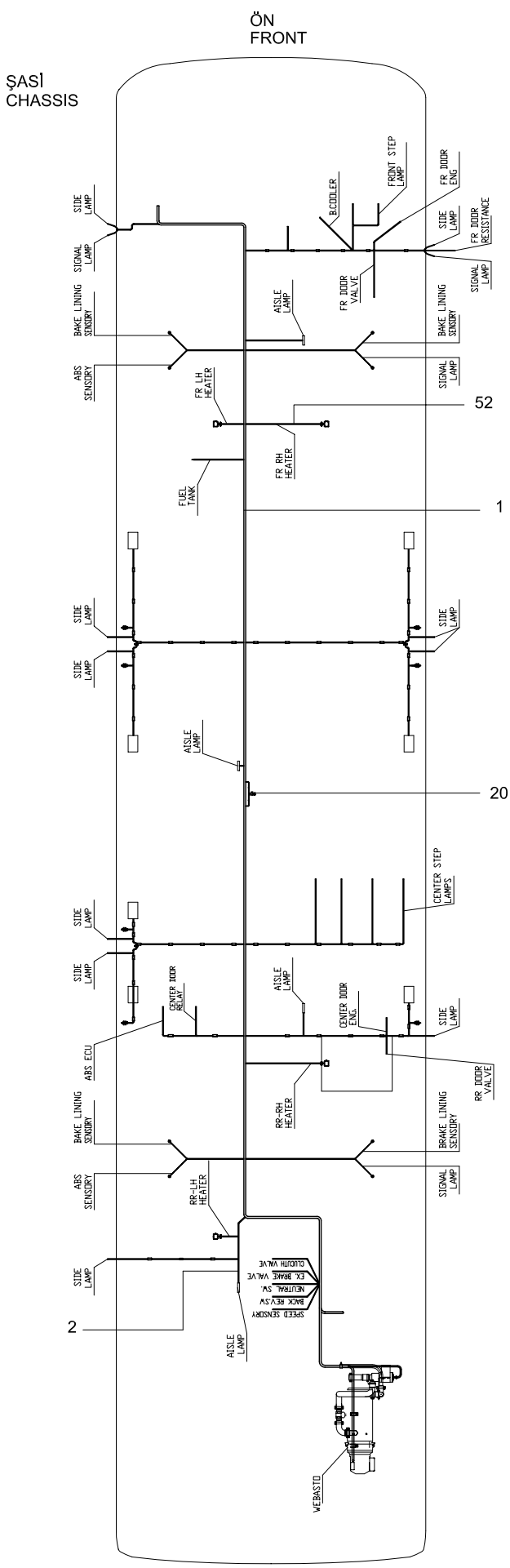

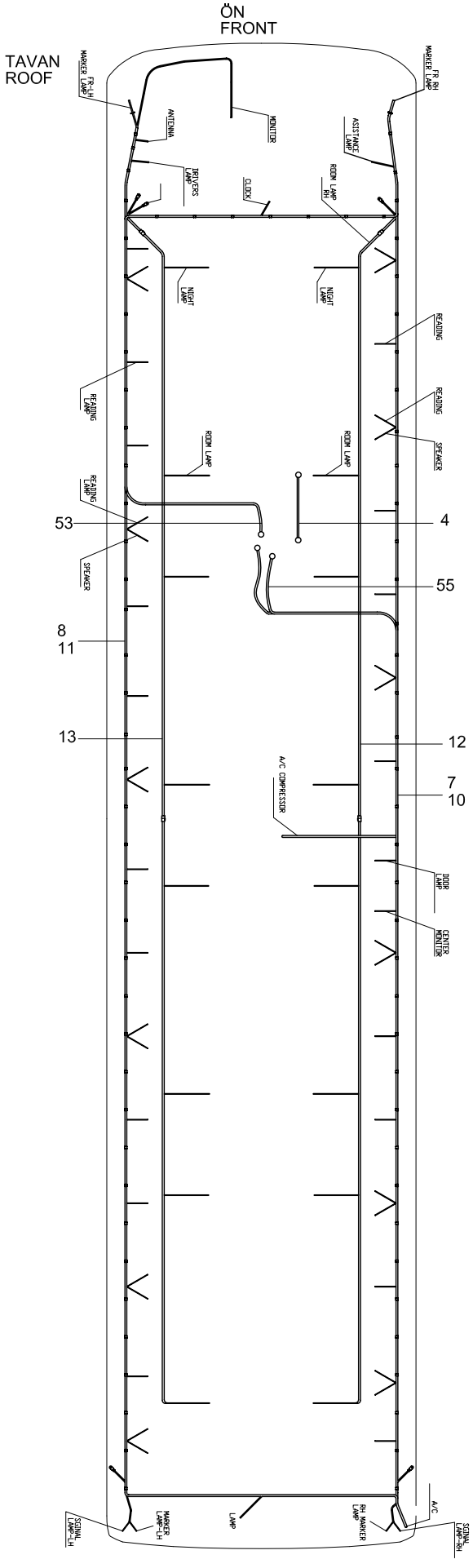

ARKA GÖVDE
REAR BODY

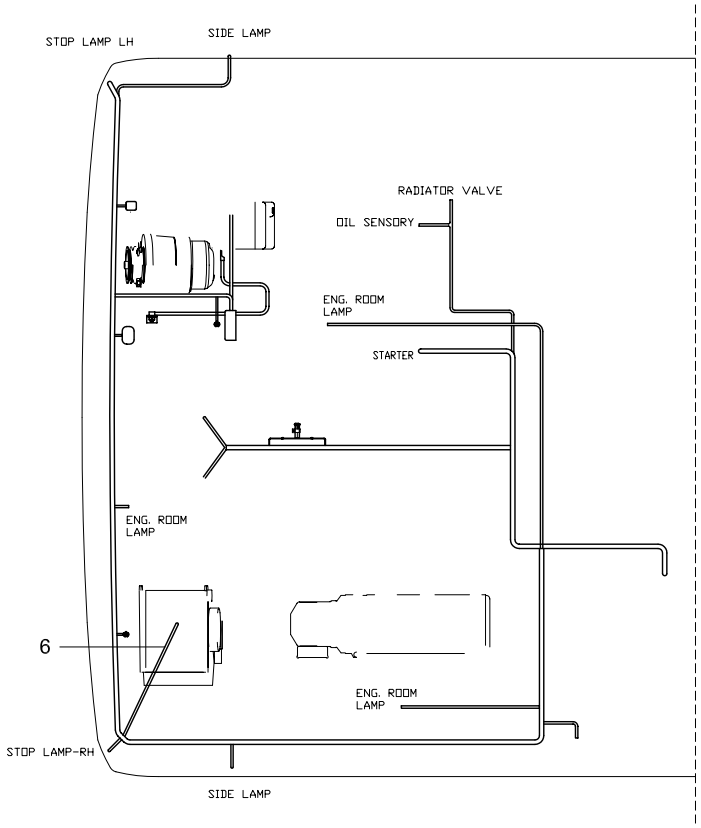

ÖN GÖVDE
FRONT BODY

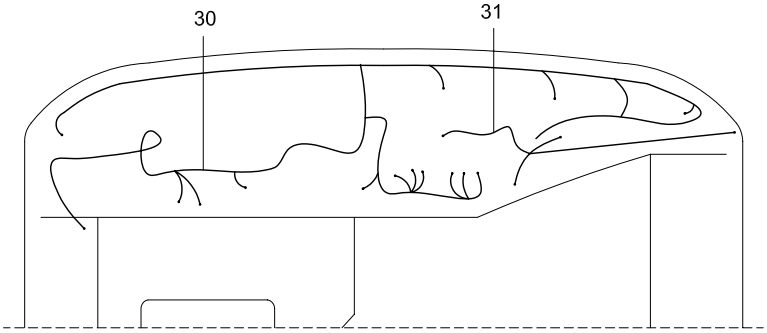

TEMSA	Kablo tesisatı Harness wring Kabel Anlagen	Drw.no: Vehicle Model: **TB162X** **TB163X**	**34-062** RevDate: Page: 1

Pos	Part Number	Turkish	English	German	Qty	R/P	From	Up To	Original Number Supplier
1	64406-94020-83Y	ŞASİ KABLO TESİSATI	HARNESS CHASSIS WIRING		1		1		TB162X-TB163X
2	64406-94050-83Y	KORİD.BASAMAK,KAPI KABLOSU	AISLE,STEP,DOOR HARN WIRING		1		1		TB162X-TB163X
4	64406-90040-80Y	ŞASİ BESLEME KABLOSU	HARNESS WIRING-GROUND		1		1		TB162X-TB163X
6	64406-97120-70Y	KLİMA KOMPRESÖRÜ KABLOSU	A/C COMPRESSOR HARNESS		1		1		TB162X-TB163X
7	64422-97036-72Y	TAVAN KABLOSU SAĞ	ROOF WIRING RH		1		1		TB162X-TB163X
8	64422-97026-72Y	TAVAN KABLOSU SOL	ROOF WIRING LH		1		1		TB162X-TB163X
10	64422-91047-71Y	HOPARLÖR KABLOSU SAĞ	SPEAKER WIRING RH		1		1		TB162X-TB163X
11	64422-91057-71Y	HOPARLÖR KABLOSU SOL	SPEAKER WIRING LH		1		1		TB162X-TB163X
12	64422-91037-71Y	SAĞ İÇ AYD. KABLO TES.	HARNEES ROOM LAMP RH		1		1		TB162X-TB163X
13	64422-91037-72Y	SOL İÇ AYD KABLO TES	HARNESS ROOM LAMP LH		1		1		TB162X-TB163X
20	TM255152Y	YANGIN İKAZ SENSÖRÜ	FIRE WARNINIG SENSORY		1		1		TB162X-TB163X
30	64406-94010-81Y	ÖN GÖVDE KABLOSU	FRONT BODY HARNESS WIRING		1		1		TB162X-TB163X
31	64406-91110-70Y	HIZ KONTROL KABLOSU	CRUISE CONTROL CABLE		1		1		TB162X-TB163X
52	64406-97060-80Y	KALORİFER ELK TES	HEATER HARNESS WIRING		1		1		TB162X-TB163X
53	62305-97020-03Y	A/C BESLEME KABLOSU	A/C HARNESSIS WIRING		1		1		TB162X-TB163X
55	64406-91020-01Y	KLİMA KONTROL KABLOSU	A/C HARNESSIS WIRING		1		1		TB162X-TB163X

35 ÖZEL DONATIMLAR
SPECIAL EQUIPMENTS
x

35-010	Ön güzergah tabelası Front destination display sign x	TB162W TB163W	TB162Z TB163Z		
35-011	Yan güzergah tabelası Side destination display sign x	TB162W TB163W	TB162Z TB163Z	TB162X TB163X	TB162Y TB163Y
35-020	Tuvalet - sökülebilir Toilet - pull out x	TB162W TB163W	TB162Z TB163Z		
35-021	Tuvalet - sabit Toilet - fixed x	TB162W TB163W	TB162Z TB163Z	TB162X TB163X	TB162Y TB163Y
35-022	Sütrak Tuvalet - yedek parçaları Toilet, Sütrak - spare part x	TB162W TB163W	TB162Z TB163Z	TB162X TB163X	TB162Y TB163Y
35-030	Buzdolabı Refrigerator x	TB162W TB163W	TB162Z TB163Z	TB162X TB163X	TB162Y TB163Y
35-031	Buzdolabı - Frenzel Refrigerator - Frenzel x	TB162W TB163W	TB162Z TB163Z	TB162X TB163X	TB162Y TB163Y
35-040	Mutfak ünitesi - TM Kitchen unit - TM x	TB162W TB163W	TB162Z TB163Z		
35-041	Mutfak ünitesi - TM Kitchen unit - TM x	TB162W TB163W	TB162Z TB163Z		
35-042	Mutfak ünitesi - Frenzel Kitchen unit - Frenzel x	TB162W TB163W	TB162Z TB163Z		
35-050	Televizyon, video Television, video x	TB162W TB163W	TB162Z TB163Z		
35-051	LCD monitör LCD monitör x	TB162W TB163W	TB162Z TB163Z	TB162X TB163X	TB162Y TB163Y
35-052	Film oynayıcı DVD DVD player x	TB162W TB163W	TB162Z TB163Z	TB162X TB163X	TB162Y TB163Y
35-053	Kanallı ses yayın sistemi - BLUAPUNKT Multi- channel audio system - BLUAPUNKT x	TB162W TB163W	TB162Z TB163Z		
35-060	Geri gidiş kamerası ve monitör Back reverse camera and monitor x	TB162W TB163W	TB162Z TB163Z		
35-065	Anten Antenna x	TB162W TB163W	TB162Z TB163Z	TB162X TB163X	TB162Y TB163Y
35-070	Uyku kabini Sleeping cabin x	TB162W TB163W	TB162Z TB163Z		

35-100	Yangın söndürücü Fire extinguisher x	TB162W TB163W	TB162Z TB163Z	TB162X TB163X	TB162Y TB163Y
35-120	Emniyet çekici ve askı Safety hammer & hanger x	TB162W TB163W	TB162Z TB163Z	TB162X TB163X	TB162Y TB163Y
35-130	Masa Table x	TB162W TB163W	TB162Z TB163Z		

TEMSA	Ön güzergah tabelası Front destination display sign	Group No : 35-010 Draw. Num. : x Rev. Date : Page : 1
	Vehicle Model: TB162W, TB162Z, TB163W, TB163Z,	

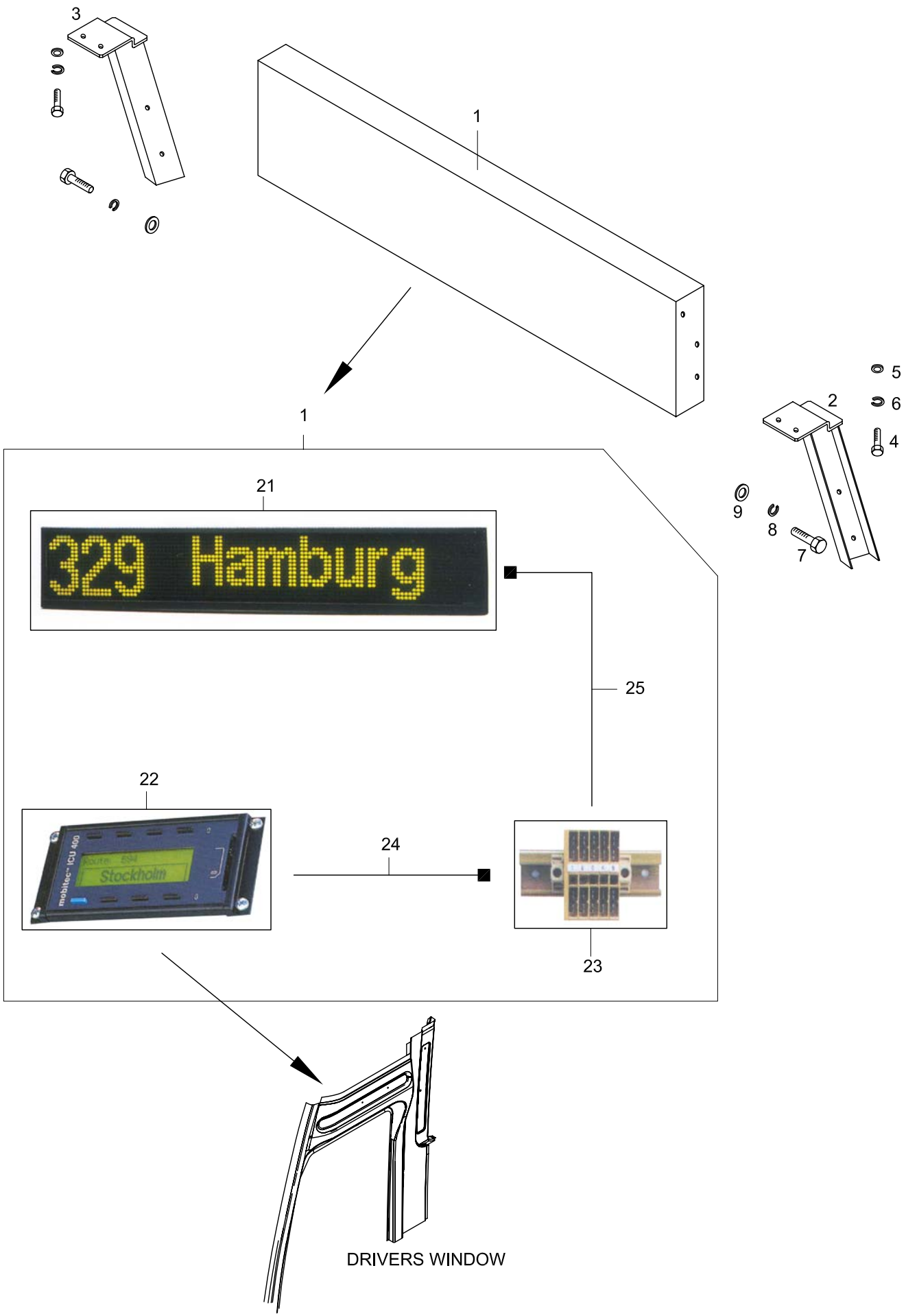

TEMSA	Ön güzergah tabelası Front destination display sign	Drw.no: 63355-96000-71Y Vehicle Model: **TB162W, TB162Z, TB163W, TB163Z,**	**35-010** RevDate: Page: 1

Pos	Part Number	Turkish	English	German	Qty	R/P	From	Up To	Original Number Supplier
1		GÜZERGAH TABELASI	DESTINATION SIGN		SET		1		MOBITEC
2	63355-92000-03Y	BRAKET - SAĞ	BRACKET - RH		1		1	300904	
2	63355-96000-01Y	BRAKET - SAĞ	BRACKET - RH		1		300904		
3	63355-92000-04Y	BRAKET - SOL	BRACKET - LH		1		1	300904	
3	63355-96000-02Y	BRAKET - SOL	BRACKET - LH		1		300904		
4	MF101257Y	CIVATA	BOLT		AR		1		
5	MF450405Y	RONDELA	WASHER SPRING		AR		1		
6	MF450005Y	PUL	WASHER PLAIN		AR		1		
7	MF200079Y	CIVATA	BOLT		AR		1		
8	MF450404Y	RONDELA	WASHER SPRING		AR		1		
9	MF450004Y	PUL	WASHER PLAIN		AR		1		
21	FD241810-1	GÜZERGAH TABELASI	DISPLAY SIGN		1		1		MOBITEC
22	CU331431-2	GÜZERGAH KONTROL ÜNİTESİ	CONTROL UNIT		1		1		MOBITEC
23	CE312011	TERMİNAL BLOKU	TERMINAL BLOCK		1		1		MOBITEC
24	CE311010.1-3M	KABLO	CABLE		1		1		MOBITEC
25	CE311040.1-FR-5.5M	KABLO	CABLE		1		1		MOBITEC

TEMSA	Yan güzergah tabelası Side destination display sign	Group No : 35-011 Draw. Num. : x Rev. Date :
	Vehicle Model: TB162W, TB162Z, TB162X, TB162Y, TB163W, TB163Z, TB163X, TB163Y	Page : 1

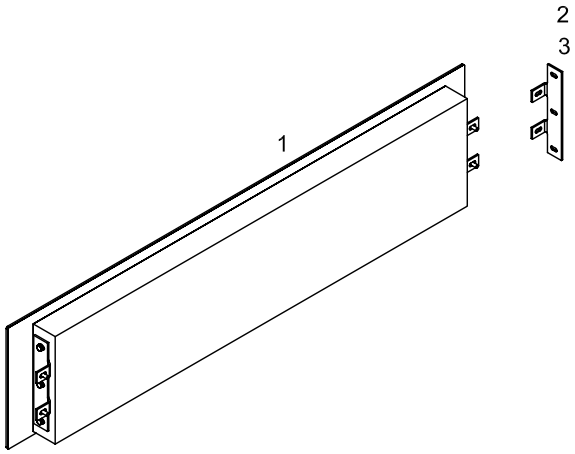

TEMSA	Yan güzergah tabelası Side destination display sign	Drw.no: 63355-92510-70/ 63113-94010-80 Vehicle Model: **TB162W, TB162Z, TB162X, TB162Y** **TB163W, TB163Z, TB163X, TB163Y**	**35-011** RevDate: Page: 1

Pos	Part Number	Turkish	English	German	Qty	R/P	From	Up To	Original Number Supplier
1	FD240510	GÜZERGAH TABELASI MOBITEC	DESTINATION SIGN MOBITEC		SET		1		TB162W-TB162Z TB1623W-TB163Z
1	FD241810-1	GÜZERGAH TABELASI MOBITEC	DESTINATION SIGN MOBITEC		SET		1		TB162X-TB162Y TB163X-TB163Y
2	63355-92500-05Y	BRAKET - SAĞ	BRACKET - RH		1		1		TB162W-TB162Z TB1623W-TB163Z
2	63113-94010-43Y	BRAKET - SAĞ	BRACKET - RH		1		1		TB162X-TB162Y TB163X-TB163Y
3	63355-92500-06Y	BRAKET - SOL	BRACKET - LH		1		1		TB162W-TB162Z TB1623W-TB163Z
3	63113-94010-44Y	BRAKET - SOL	BRACKET - LH		1		1		TB162X-TB162Y TB163X-TB163Y

TEMSA	Tuvalet - sökülebilir Toilet - pull out x	Group No : 35-020 Draw. Num. : x Rev. Date : Page : 1
	Vehicle Model: TB162W, TB162Z, TB163W, TB163Z,	

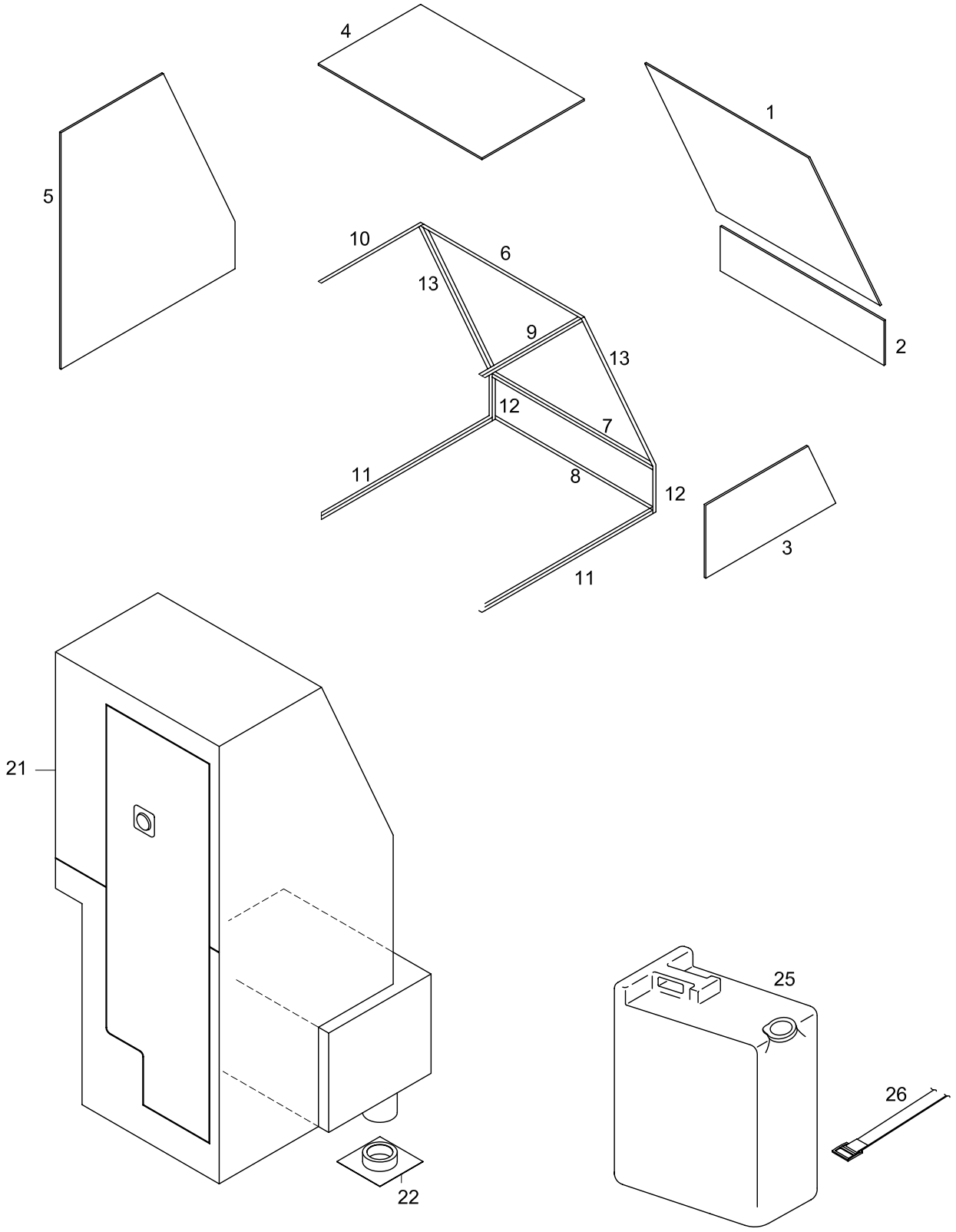

TEMSA	Tuvalet - sökülebilir Toilet - pull out	Drw.no: 62202-96014-90Y Vehicle Model: **TB162W, TB162Z** **TB163W, TB163Z**	**35-020** RevDate: Page: 1

Pos	Part Number	Turkish	English	German	Qty	R/P	From	Up To	Original Number Supplier
1	62202-91014-31X	KONTRPLAK	PLYWOOD		1		1		
2	62202-91014-32X	KONTRPLAK	PLYWOOD		1		1		
3	62202-91014-33X	KONTRPLAK	PLYWOOD		1		1		
4	62202-91014-34X	KONTRPLAK	PLYWOOD		1		1		
5	62202-91014-35X	KONTRPLAK	PLYWOOD		1		1		
6	62202-91014-36Y	L-PLAKA	PLATE-L		1		1		
7	62202-91014-37Y	L-PLAKA	PLATE-L		1		1		
8	62202-91014-38Y	L-PLAKA	PLATE-L		1		1		
9	62202-91014-39Y	L-PLAKA	PLATE-L		1		1		
10	62202-91014-40Y	L-PLAKA	PLATE-L		1		1		
11	62202-91014-41Y	L-PLAKA	PLATE-L		1		1		
12	62202-91014-42Y	L-PLAKA	PLATE-L		1		1		
13	62202-91014-43Y	L-PLAKA	PLATE-L		1		1		
21	62202-91014-75Y	TUVALET KOMPLE SÜTRAK	TOILET ASSY SÜTRAK		1		1		BWCA032 pull out
21	62202-91214-75Y	TUVALET KOMPLE	TOILET ASSY		1		1		BWCA034 chemical- pull out
21	62202-96114-75Y	TUVALET KOMPLE SÜTRAK	TOILET ASSY SÜTRAK		1		1		BWCA033 water heater- pull out
22	62202-91014-05Y	ÇIKIŞ PLAKASI	PLATE, OUTLET		1		1		
25	TU512109Y	SU BİDONU	WATER TANK		1		1		
26	TU512128Y	KEMER	BELT		1		1		

TEMSA	Tuvalet - sabit Toilet - fixed x	Group No : 35-021 Draw. Num. : x Rev. Date :
	Vehicle Model: TB162W, TB162Z, TB162X, TB162Y, TB163W, TB163Z, TB163X, TB163Y	Page : 1

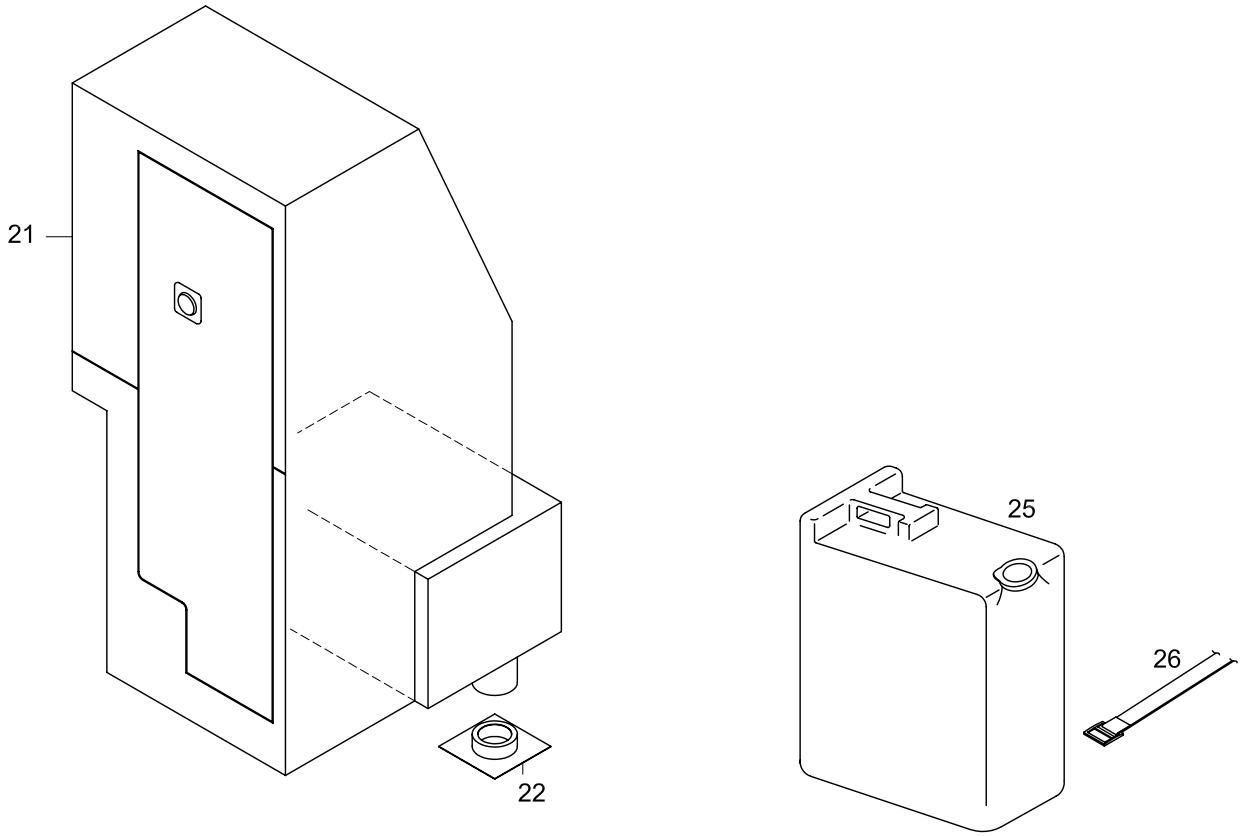

TEMSA	Tuvalet - sabit Toilet - fixed	Drw.no: 62202-98014-70Y Vehicle Model: **TB162W, TB162Z, TB162X, TB162Y** **TB163W, TB163Z, TB163X, TB163Y**	**35-021** RevDate: Page: 1

Pos	Part Number	Turkish	English	German	Qty	R/P	From	Up To	Original Number Supplier
21	62202-91016-70Y	TUVALET KOMPLE	TOILET ASSY		1		1		BTIP01MSR TYP: FIXED
21	62202-91216-70Y	TUVALET KOMPLE	TOILET ASSY		1		1		BTIP01WC chemical - fixed
22	62202-91014-05Y	ÇIKIŞ PLAKASI	PLATE, OUTLET		1		1		
25	TU512109Y	SU BİDONU	WATER TANK		1		1		
26	TU512128Y	KEMER	BELT		1		1		

TEMSA	Sütrak Tuvalet - yedek parçaları Toilet, Sütrak - spare part	Drw.no: Vehicle Model: TB162W, TB162Z, TB162X, TB162Y TB163W, TB163Z, TB163X, TB163Y	35-022 RevDate: Page: 1

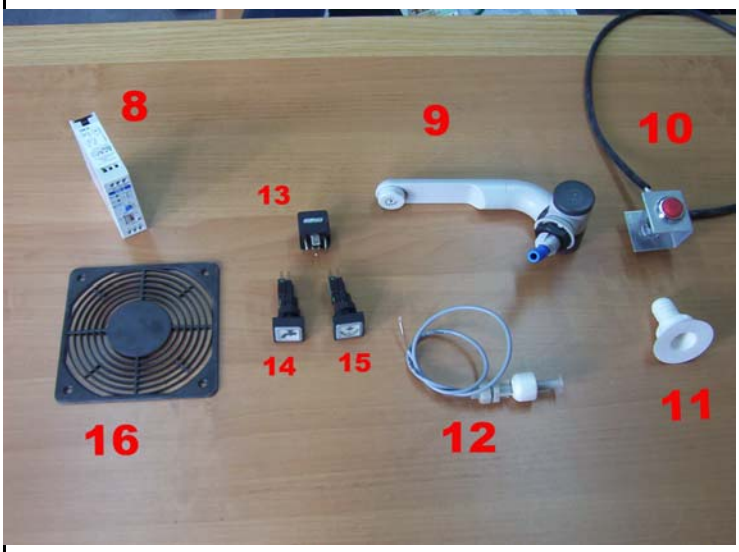

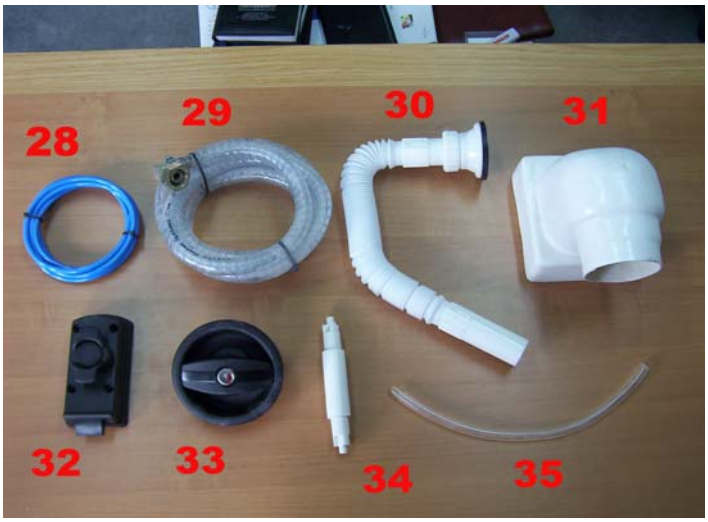

TEMSA	Sütrak Tuvalet - yedek parçaları Toilet, Sütrak - spare part	Drw.no: Vehicle Model: TB162W, TB162Z, TB162X, TB162Y TB163W, TB163Z, TB163X, TB163Y	35-022 RevDate: Page: 2

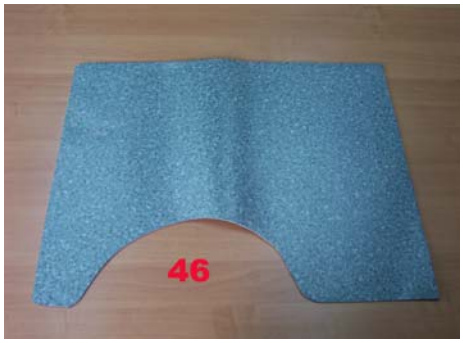

TEMSA	Sütrak Tuvalet - yedek parçaları Toilet, Sütrak - spare part	Drw.no: Vehicle Model: **TB162W, TB162Z, TB162X, TB162Y** **TB163W, TB163Z, TB163X, TB163Y**	**35-022** RevDate: Page: 3

Pos	Part Number	Turkish	English	German	Qty	R/P	From	Up To	Original Number Supplier
1	110.00.04	ELEK.SU MOTORU 24 V	WATER PUMP 24V		1				
2	110.00.27	SİGORTALIK (5'Lİ)	FUSE HOLDER		1				
3	110.00.03	PNOMATİK VALF 24 V	PNEUMATIC VALVE 24V		2				
4	110.00.09	KLEPE (HAVA PİSTONLU) REXRO	FLAP (REXROHT)		2				
5	110.00.01	SHURFLO HİDROFOR 24 V	PRESSURE TANK, SHURFLO 24V		1				
6	110.00.07	SPOT LAMBA	SPOT LAMP		2				
7	26.01.19.001	RÖLE SOKETİ	RELAY SOCKET		4				
8	110.00.06	ELEK.ZAMAN AYARLAYICI	TIMER		1				
9	110.00.18	MUSLUK	TAP		1				
10	110.00.42	BOŞALTMA BUTONU	DISCHARGE BUTTON, WASTE TANK		1				
11	110.00.17	EVYE GİDERİ	FITTINGS, LAVATORY		1				
12	110.00.14	ELEK.SU SEVİYE ŞAMANDRASI	WATER LEVEL FLOAT		1				
13	26.01.17.107	RÖLE 24 V	RELAY 24V		4				
14	110.00.13	MUSLUK BUTONU	BUTTON, TAP		1				
15	110.00.12	HİDROFOR BUTONU	BUTTON, WATER CLOSET		1				
16	110.00.28	FAN IZGARASI	GRILL, ELECTRIC FAN		1				
17	110.00.05	ELEK.FAN MOTORU (SUNON) 24 V	ELECTRIC FAN (SUNSON) 24V		1				
18	110.00.10	KLEPE ÜST FLANS (PVC)	FLAP (UPPER FLANGE, PVC)		1				
19	110.00.11	KLEPE ALT FLANS (PVC)	FLAP (LOWER FLANGE, PVC)		2				
20	110.00.19	SABUNLUK	SOAP DISH		1				
21	110.00.15	6X6X6 T KONNEKTÖR	6x6x6 CONNECTOR		2				
22	110.00.56	8X8X6 T KONNEKTÖR			1				
23	110.00.24	KLOZET FISKIYESİ	FOUNTAIN, WATER CLOSET		3				
24	110.00.02	SELENOID VALF 24 V	SOLENOID VALVE 24V		1				
25	110.00.57	HİDROFOR MOT. BAĞLANTI REK.DÜZ			1				
26	110.00.58	HİDROFOR MOT. BAĞLANTI REK.90˚			1				
27	110.00.25	REDİKSİYON 1/2 3/4	REDUCER (1/2 3/4)		2				
28	110.00.52	HAVA HORTUMU 6MM	TUBE, SOFT VINLY (6mm)		2 m				
29	110.00.54	SU HORTUMU 13 MM	HOSE, WATER (12mm)		2 m				
30	110.00.45	TABAN TAHLİYE GİDERİ	SIPHON		1				
31	110.00.35	HAVALANDIRMA DİRSEĞİ	VENTILATING HOSE		1				
32	110.00.37	KAPI KİLİDİ İÇ	DOOR LOCK (INNER)		1				
33	110.00.38	KAPI KİLİT YUVASI DIŞ	DOOR LOCKING HOLE (OUTER)		1				
34	110.00.43	TUVALET KAĞIDI TUTUCUSU	HOLDER, TOILET PAPER		1				
35	110.00.53	SU HORTUMU 8 MM	HOSE, WATER (8mm)		2 m				

TEMSA	Sütrak Tuvalet - yedek parçaları Toilet, Sütrak - spare part	Drw.no: Vehicle Model: TB162W, TB162Z, TB162X, TB162Y TB163W, TB163Z, TB163X, TB163Y	35-022 RevDate: Page: 4

Pos	Part Number	Turkish	English	German	Qty	R/P	From	Up To	Original Number Supplier
36	110.00.23	KLOZET KAPAĞI	FLAP, WATER CLOSET		1				
37	110.00.21	FIRÇALIK	BRUSH		1				
38	110.00.51	SİGORTA	FUSE		5				
40	110.00.46	VENTİL SUSTURUCUSU	SILENCER, PNEUMATIC VALVE		4				
41	110.00.47	HAVA HORTUMU BAĞLANTI REKC	FITTINGS, AIR LINE		6				
42	110.00.29	ELEKTRİK JAK	SOCET		1				
43	110.00.48	TUVALET KAPI SWİCİ	SWITCH, DOOR		1				
44	110.00.34	PİS SU TANKI (SAFARİ)			1				
45	110.00.36	KLOZET	WATER CLOSET		1				
46	110.00.49	TABAN DÖŞEME VINYLEX	VINYLEX		1				
47	110.00.22	AYNA	MIRROR		1				
48	110.00.40	WC KAPI ÇERÇEVESİ DIŞ	OUTER FRAME, DOOR		1				
49	110.00.55	RÖLEPOMPA PANELİ ALÜMİNYUM	SUPPORT PLATE, RELAY&PUMP		1				
50	110.00.20	ÇÖP KOVASI	WASTEBASKET		1				
51	110.00.50	ELEKTRİK KABLO DEMETİ	HARNESS		1set				
52	110.00.26	SU HORTUM ARA BAĞLANTI (JAK	CONNECTOR, WATER HOSE		1				
53	110.00.39	WC KAPISI	DOOR		1				
54	110.00.08	SPOT AMPUL 24 V	BULB, SPOT LAMP 24V		2				
	110.00.16	EVYE	LAVATORY						
	110.00.31	TUVALET KABİNİ (SAFARİ)	CABIN SAFARİ						
	110.00.32	TUVALET KABİNİ SÖKÜLEBİLİR	CABIN SAFARİ (PORTTABLE)						
	110.00.33	PİS SU TANKI (SAFİRSAFARİ)	WASTE TANK SAFİRSAFARİ						
	110.00.34	PİS SU TANKI (SAFARİ SÖKÜLEBİ	WASTE TANK(SAFARİ PORTTABLE)						
	110.00.41	WC KAPI ÇERÇEVESİ	FRAME, DOOR						
	110.00.44	RAF	SHELF						

TEMSA	Buzdolabı Refrigerator	Group No : 35-030 Draw. Num. : x Rev. Date : Page : 1
	Vehicle Model: TB162W, TB162Z, TB162X, TB162Y, TB163W, TB163Z, TB163X, TB163Y	

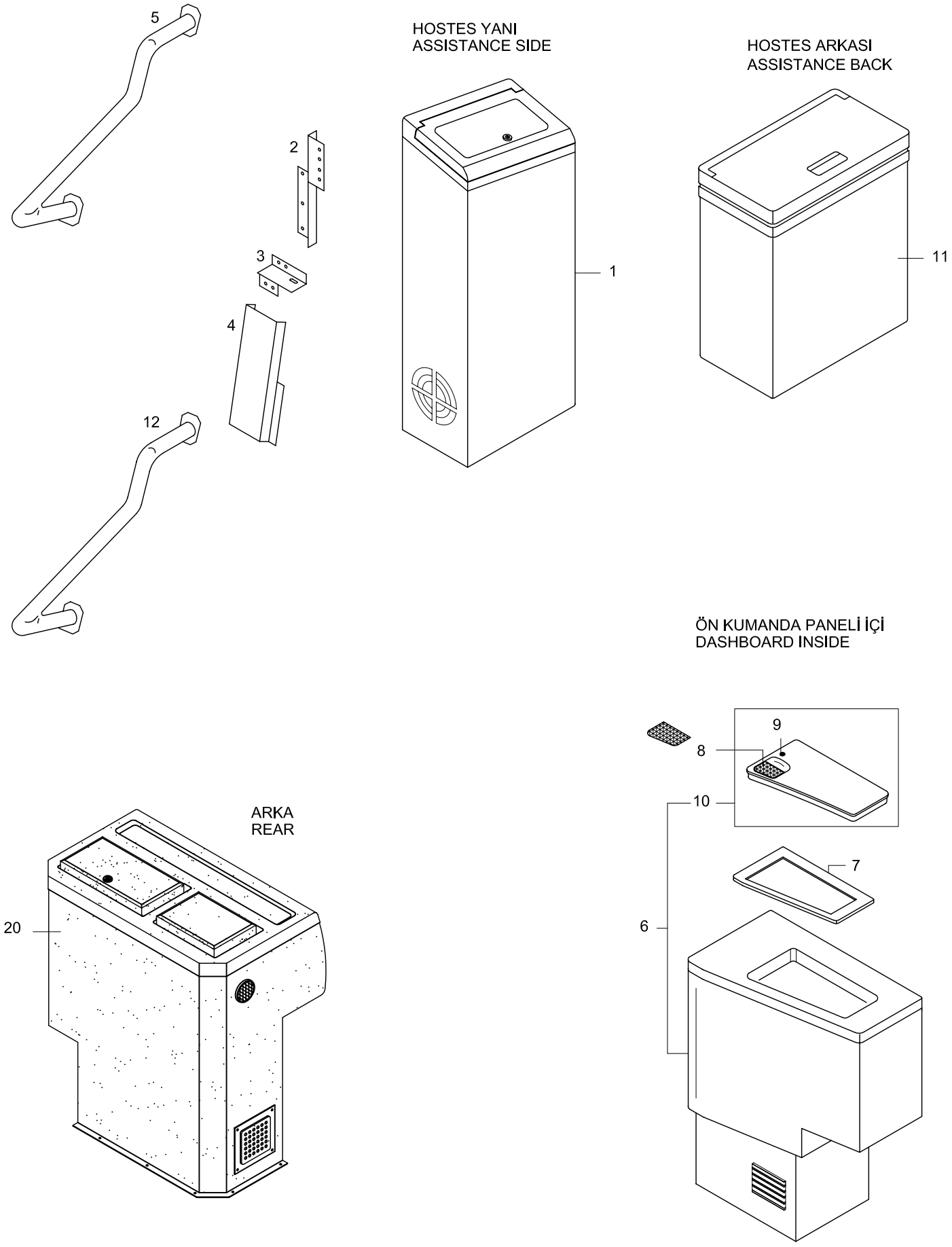

TEMSA	Buzdolabı Refrigerator	Drw.no: Vehicle Model: **TB162W, TB162Z, TB162X, TB162Y** **TB163W, TB163Z, TB163X, TB163Y**	**35-030** RevDate: Page: 1

Pos	Part Number	Turkish	English	German	Qty	R/P	From	Up To	Original Number Supplier
1	TU512134Y	BUZDOLABI HOSTES YANI	REFRIGERATOR -ASSISTANCE SIDE		1		1		OPTION
2	63258-90017-01Y	BRAKET	BRACKET		1		1		
3	63258-90017-07Y	BRAKET	BRACKET		1		1		
4	63258-90017-03Y	BRAKET	BRACKET		1		1		
5	63258-90017-04Y	TUTAMAK	GRAP		1		1		BUZDOLAPLI WITH REFRIGERATOR
6	63258-90130-85Y	BUZDOLABI DASHBOARD İÇİ	REFRIGERATOR DASHBOARD INSIDE		1		1		SÜTRAK
7	62309-60110-03Y	LASTİK	RUBBER		1		1		
8	63406-80100-48Y	BANT	STICKER		1		1		
9	64163-94500-02X	KİLİT	LOCK		1		1		
10	64163-94500-01X	KAPAK	LID		1		1		
11	63258-96000-70Y	BUZDOLABI HOSTES ARKASI	REFRIGERATOR ASSISTANCE BACK		1		1		
12	63258-90017-06	TUTAMAK	GRAP		1		1		BUZDOLAPSIZ
20	63258-90036-01Y	BUZDOLABI+KAHVE MAKİNESİ	REFRIGERATOR+BOILER		1		1		OPTION - REAR

1

TEMSA	Buzdolabı - Frenzel Refrigerator - Frenzel	Drw.no: 63258-96036-80 Vehicle Model: **TB162W, TB162Z, TB162X, TB162Y** **TB163W, TB163Z, TB163X, TB163Y**	**35-031** RevDate: Page: 1

Pos	Part Number	Turkish	English	German	Qty	R/P	From	Up To	Original Number Supplier
1	63258-96036-01	Buzdolabı - Frenzel FOKT50 Frenzel 62lt	Refrigerator - Frenzel FOKT50 Frenzel 62lt		1		210105		132398-132409 FRENZEL

TEMSA	Mutfak ünitesi Kitchen unit x	Group No : 35-040 Draw. Num. : x Rev. Date : Page : 1
	Vehicle Model: TB162W, TB162Z, TB163W, TB163Z,	

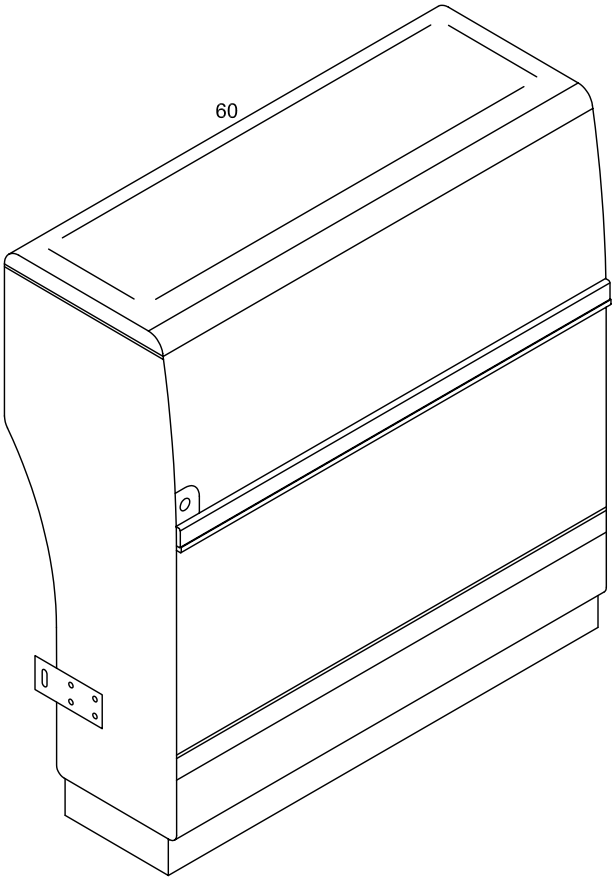

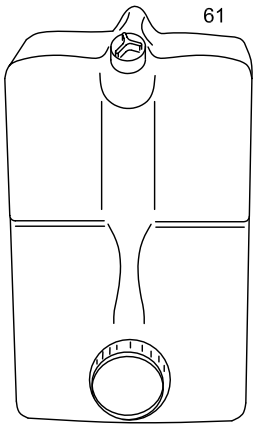

TEMSA	Mutfak ünitesi Kitchen unit x	Group No : 35-040 Draw. Num. : x Rev. Date : Page : 2
	Vehicle Model: TB162W, TB162Z, TB163W, TB163Z,	

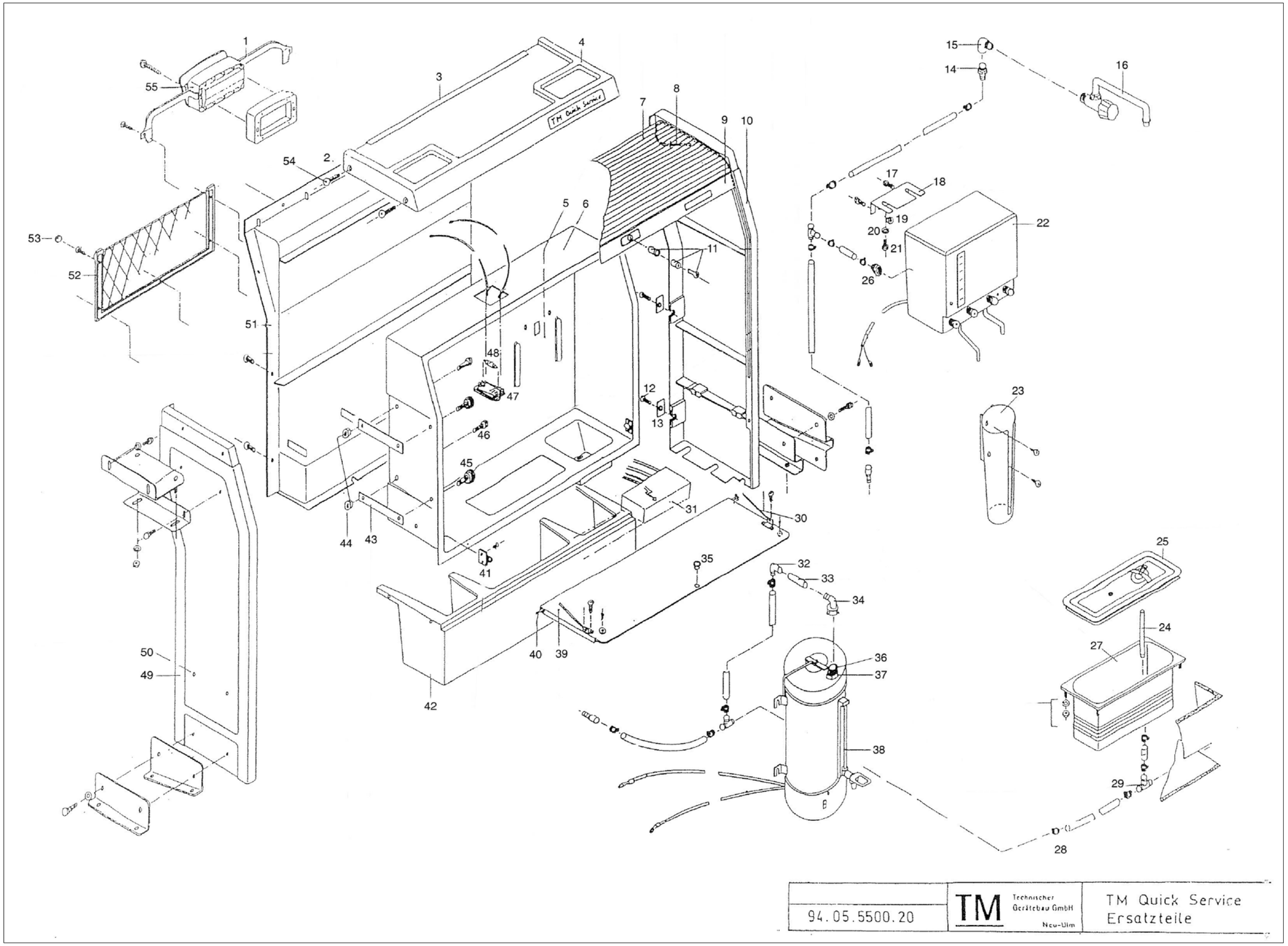

TEMSA	Mutfak ünitesi - TM Kitchen unit - TM	Drw.no: 63258-96036-70Y Vehicle Model: **TB162W, TB162Z** **TB163W, TB163Z**	**35-040** RevDate: Page: 1

Pos	Part Number	Turkish	English	German	Qty	R/P	From	Up To	Original Number Supplier
1	05.5020.00.19	TUTAMAK	HANDLE	HALTEGRIFF					TM
2	05.5000.00.21	MESAFE ÇERÇEVESİ	DISTANCE FRAME	DISTANZRAHMEN					TM
3	05.5000.00.23	KORUYUCU PERVAZ	PROTECTOR MOULDING	SCHURTZLEISTE					TM
4	05.5000.13.00	KAPAK	COVER	DECKEL					TM
5	05.5650.00.22	ARKA DUVAR PLAKASI	PLATE REAR WALL	RUCKWANDPLATTE					TM
6	05.5655.19.00	İÇ PANEL	INNER PANEL	INNENTEIL					TM
7	05.5000.00.02	RULO KAPAK	ROLLER	ROLLO					TM
8	52.5000.00.12	STROK	STROKE	RASTSTANGE					TM
8	51.9901.72.73	BASKI YAYI	PRESSURE SPRING	DRUCKFEDER					TM
9	05.5000.10.07	PERVAZ	EDGE	SCHLIEBLEISTE					TM
10	05.5000.10.01	YAN PANEL SAĞ	SIDE PANEL RH	SEITENTEIL RECHTS					TM
11	05.5000.00.09	KİLİT SETİ	LOCK SET	DRUCKZYLINDER MIT SCHLUSSEL					TM
12	51.0103.06.25	VİDA M6*25	SCREW M6*25	SENKSCHRAUBE M6*25					TM
13	05.5000.00.08	PLAKA	PLATE	PLATTE					TM
14	05.6100.00.01	KONNEKTÖR	CONNECTOR	VERSCHRAUBUNG					TM
15	05.6100.00.00	KONNEKTÖR	CONNECTOR	VERSCHRAUBUNG					TM
16	05.1000.10.08	MUSLUK	FAUCET	WASSERHAHN					TM
	05.5000.16.01	DÖNDÜRME DÜĞMESİ	TURN BUTTON	DREHKNOPF					TM
17	51.0101.06.19	VİDA M6*20	SCREW M6*20	SENKSCHRAUBE M6*20					TM
18	07.6000.10.17	BRAKET	BRACKET	HALTER					TM
18	05.1001.63.03	KÖŞELİ PLAKA	CORNER PLATE	HALTEWINKEL 94MODELL					TM
19	51.8806.93.42	SOMUN	NUT	MUTTER					TM
20	51.7705.13.40	RONDELA	WASHER SPRING	SCHEIBE					TM
21	51.0102.05.12	CIVATA M5*12	BOLT M5*12	SCHRAUBE M5*12					TM
22	07.6000.10.62	SU ISITICI	BOILER	WASSERAUSLAUF					TM
23	05.5000.00.12	FİNCANLIK	HOLDER CUP	TASSENSPENDER					TM
24	08.0180.40.00	HORTUM	HOSE	ROHR					TM
25	08.0130.30.00	KAPAK 130/131	COVER 130/131	DECKEL 130/131					TM
25	08.0181.10.00	KAPAK 180/181	COVER 180/181	DECKEL 130/181					TM
26	50.6100.00.02	KONNEKTÖR	CONNECTOR	VERSCHRAUBUNG					TM
27	08.0132.00.00	SOSİS KIZARTICI	FRANKFURTER FRIYING	WURSTCHENKOCHER					TM
28	08.0183.00.00	SOSİS KIZARTICI	FRANKFURTER FRIYING	WURSTCHENKOCHER					TM
29	52.5000.00.02	T-KONNEKTÖR	T CONNECTOR	T - VERSCHRAUBUNG					TM
30	05.5000.00.14	KAPAK BRAKETİ	BRACKET LID	KLAPPENHALTER					TM
31	05.5000.12.00	SİGORTA KUTUSU	FUSE BOX	VORRANGSCHALTUNG					TM

TEMSA	Mutfak ünitesi - TM Kitchen unit - TM	Drw.no: Vehicle Model: **TB162W, TB162Z** **TB163W, TB163Z**	**35-040** RevDate: Page: 2

Pos	Part Number	Turkish	English	German	Qty	R/P	From	Up To	Original Number Supplier
32	52.5000.00.01	KONNEKTÖR	CONNECTOR	SCHLAUCHVERBINDER					TM
33	52.0009.00.06	HORTUM	HOSE	WASSERSCHLAUCH					TM
34	52.5000.15.01	KONNEKTÖR	CONNECTOR	VERSCHRAUBUNG					TM
35	05.5000.00.11	HORTUM	HOSE	ROHR					TM
36	52.5000.15.02	NIPEL	NIPPEL	DOPPELNIPPEL					TM
37	52.5000.15.03	SOMUN	NUT	MUTTER					TM
38	10.5401.00.00	KAHVE MAKİNASI	CAFEPERFECT CP40	CAFEPERFECT CP40					TM
39	05.5000.10.06	KAPAK	LID	KLAPPE					TM
40	51.0107.06.30	MİL	SHIFT	STIFT					TM
41	05.5000.00.15	MANYETİK KİLİT	MAGNET LOCK	MAGNETVERSCHLUB					TM
42	05.5000.10.04	ALT BÖLME	UNDER PARTITION	UNTERTEIL					TM
43	05.5000.00.07	PLAKA	PLATE	HALTEBLECH					TM
44	51.8806.93.42	SOMUN	NUT	MUTTER					TM
45	51.0101.06.17	VİDA M6*16	SCREW M6*16	SCHRAUBE M6*16					TM
46	51.0101.06.20	VİDA M6*20	SCREW M6*20	SCHRAUBE M6*20					TM
47	32.7000.00.00	İÇ LAMBA	INNER LAMP	INNENLEUCHTE					TM
48	32.8000.24.00	SOFT AMPUL 24V/5W	SOFT LITTLE 24V/5W	SOFITTE 24V/5W					TM
49	05.5000.10.02	YAN PANEL SOL	SIDE PANEL LH	SEITENTEIL LINKS					TM
50	51.0101.06.20	VİDA M6*45	SCREW M6*45	SCHRAUBE M6*45					TM
51	05.5650.10.03	ARKA DUVAR	REAR WALL	RUCKWAND					TM
52	05.5000.00.16	FİLE	STRING	NETZ					TM
53	52.2000.20.02	VİDA BAŞLIĞI	SCREW CAP	ABDECKKAPPE					TM
54	51.0103.06.16	VİDA M6*16	SCREW M6*16	SCHRAUBE M6*16					TM
55	05.5000.00.20	KÜLLÜK	ASHTRAY	ASCHER					TM
60	05.3000.00.10	MUTFAK ÜNİTESİ 24V	BORDKITCHEN 24V		1		290704		TM
61	16.6052.00.00	SU BESLEME TANKI	WATER SUPPLY UNIT		1		290704		TM

1

2

TEMSA	Mutfak ünitesi - TM Kitchen unit - TM	Drw.no: 63258-96036-75 Vehicle Model: **TB162W, TB162Z** **TB163W, TB163Z**	**35-041** RevDate: Page: 1

Pos	Part Number	Turkish	English	German	Qty	R/P	From	Up To	Original Number Supplier
1	05.5663.10.00	TM Mutfak ünitesi QS Standart 24V	TM BORDKITCHEN QS Standart 24V		1		210105		TM
2	05.6011.00.00	TM WATER-SUPPLY	TM WATER-SUPPLY		1		210105		TM

1

2

TEMSA	Mutfak ünitesi - Frenzel Kitchen unit - Frenzel	Drw.no: 63258-96026-80 Vehicle Model: **TB162W, TB162Z** **TB163W, TB163Z**	**35-042** RevDate: Page: 1

Pos	Part Number	Turkish	English	German	Qty	R/P	From	Up To	Original Number Supplier
1	63258-96026-01	FOB50 Mutfak ünitesi	FOB50 Frenzel Kitc		1		210105		131918-131920,133524 FRENZEL
2	63258-96026-02	Su tankı Frenzel 25lt	Frenzel WATER S. U. 25lt		1		210105		133625-133628 FRENZEL

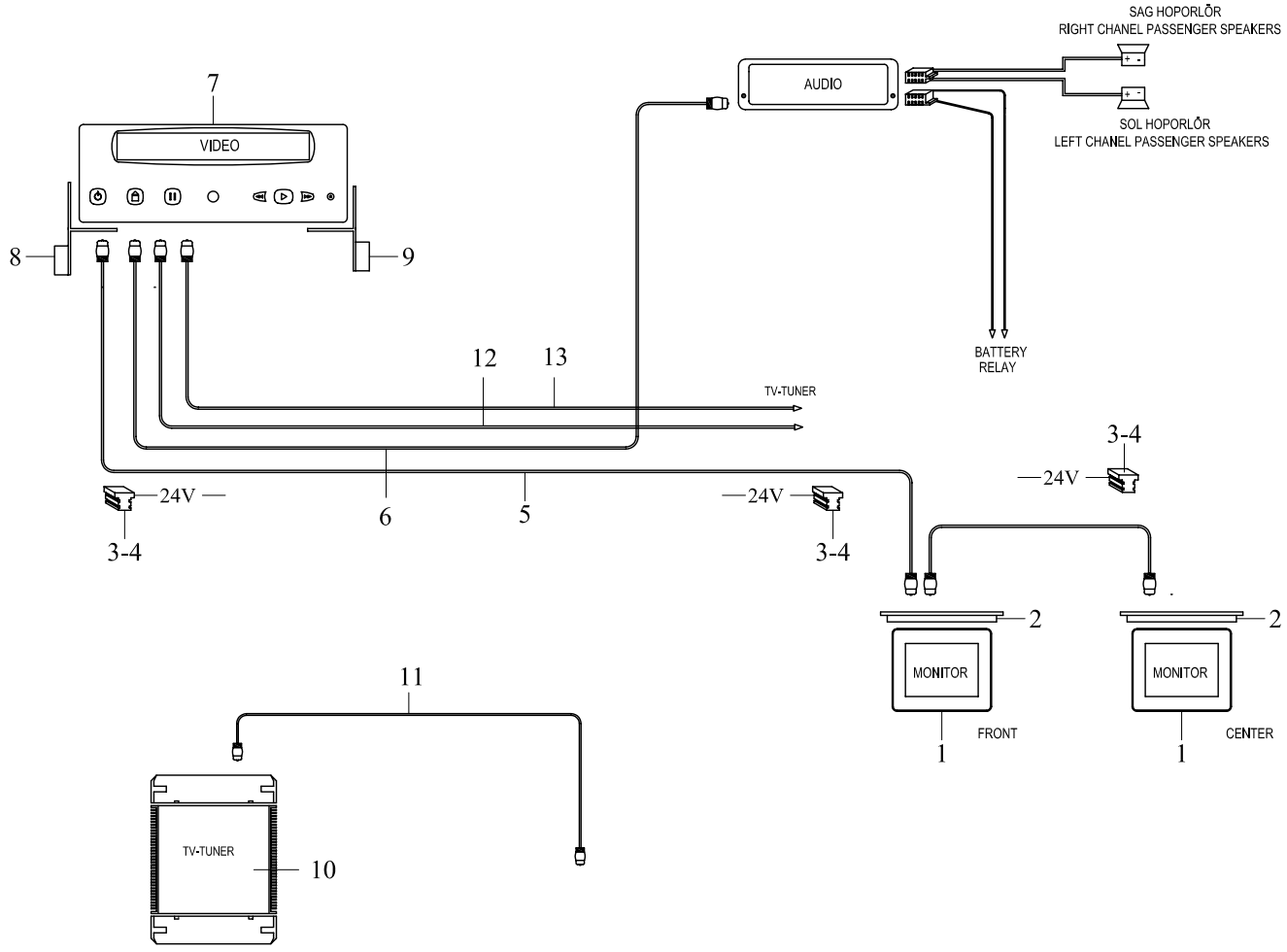
SAG HOPORLÖR
RIGHT CHANEL PASSENGER SPEAKERS
AUDIO
SOL HOPORLÖR
LEFT CHANEL PASSENGER SPEAKERS
7
VIDEO
8
9
BATTERY
RELAY
12
13
TV-TUNER
3-4
24V
24V
3-4
24V
3-4
6
5
2
2
MONITOR
MONITOR
FRONT
CENTER
1
1
11
TV-TUNER
10

TEMSA	Televizyon, video Television, video	Drw.no: 63111-90500-80- 81/ -96500-70/-90006-70 Vehicle Model: **TB162W, TB162Z** **TB163W, TB163Z**	**35-050** RevDate: Page: 1

Pos	Part Number	Turkish	English	German	Qty	R/P	From	Up To	Original Number Supplier
1	7607275005	MONİTÖR	MONITOR		2		1		BLAUPUNKT
2	7607005715	MONİTÖR BRAKETİ	BRACKET , MONITOR		2		1		BLAUPUNKT
3	7608602720	SOKET	SOCKET		3		1		BLAUPUNKT
4	7608603120	TERMİNAL	TERMINAL		6		1		BLAUPUNKT
5	TC214239Y	VİDEO KABLOSU	CABLE , VIDEO		2		1		
6	TC214241Y	AUDİ KABLOSU	CABLE , AUDIO		2		1	150305	
6	TC214244Y	AUDİ KABLOSU	CABLE , AUDIO		2		150305		
7	7607276001	VİDEO	VIDEO		1		1	250204	BLAUPUNKT
7	7607276011	VİDEO	VIDEO		1		250204		BLAUPUNKT
8	63111-90018-01Y	BRAKET	BRACKET		1		1	?	old
8	63111-80006-01Y	BRAKET	BRACKET		1		?	?	old
8	63111-80006-03Y	BRAKET	BRACKET		1		?		
9	63111-90018-02Y	BRAKET	BRACKET		1		1	?	old
9	63111-80006-02Y	BRAKET	BRACKET		1		?		
10	7607919020	TV TUNER	TV TUNER		1		1		BLAUPUNKT
11	7607006316	TV TUNER KABLOSU	CABLE, TV TUNER		1		1		BLAUPUNKT
12	TC214243Y	VİDEO KABLOSU	CABLE , VIDEO		1		1		
13	TC214245Y	VİDEO KABLOSU	CABLE , VIDEO		1		1		

TEMSA	LCD monitör LCD monitör x	Group No : 35-051 Draw. Num. : x Rev. Date : Page : 1
	Vehicle Model: TB162W, TB162Z, TB162X, TB162Y, TB163W, TB163Z, TB163X, TB163Y	

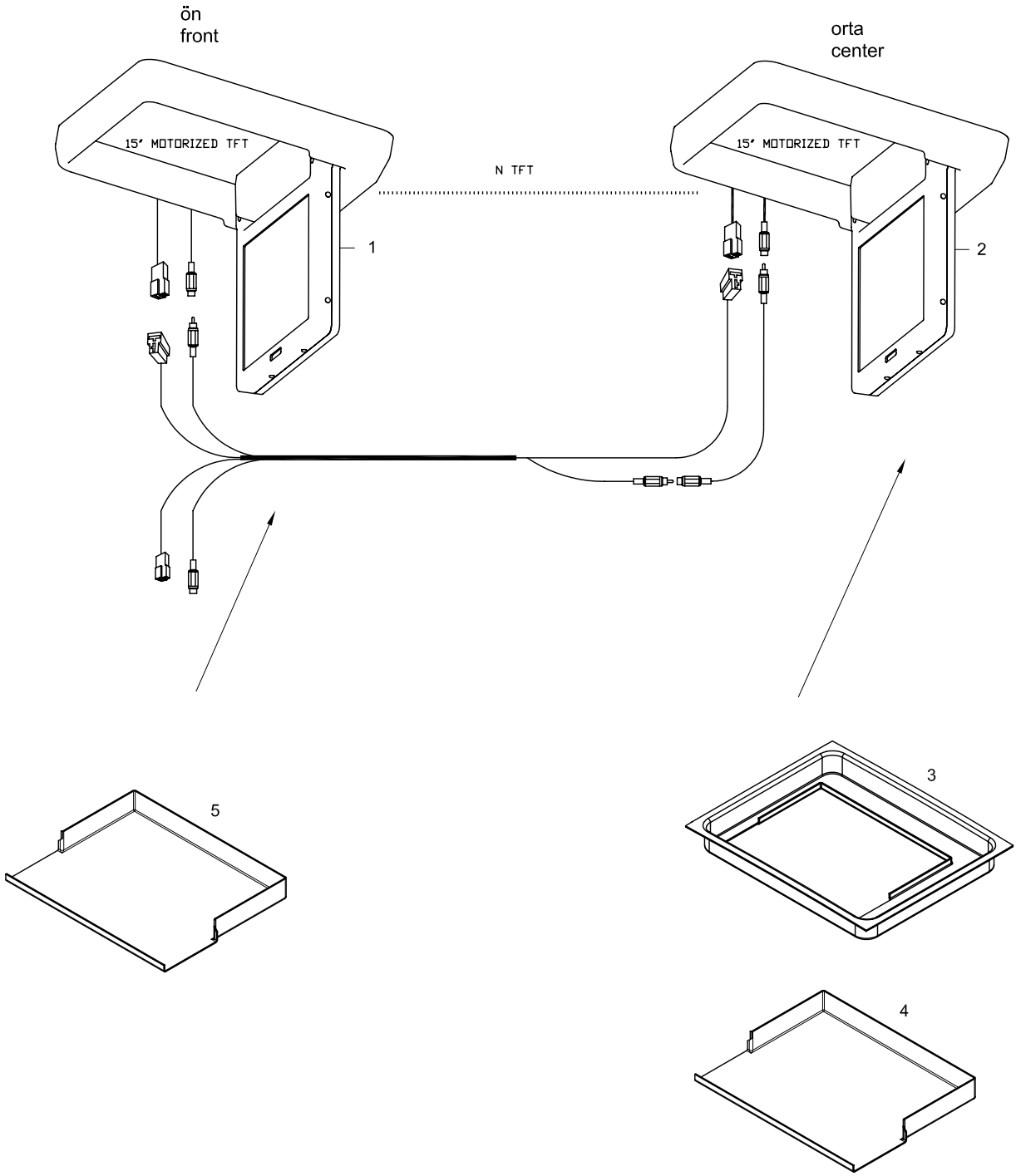

TEMSA	LCD monitör LCD monitör	Drw.no: 63111-90500-90 / 91 Vehicle Model: **TB162W, TB162Z, TB162X, TB162Y** **TB163W, TB163Z, TB163X, TB163Y**	**35-051** RevDate: Page: 1

Pos	Part Number	Turkish	English	German	Qty	R/P	From	Up To	Original Number Supplier
1	7607005736	LCD MONITOR ÖN	LCD MONITOR FRONT		1		300904		BLAUPUNKT
1	8390319Y	LCD MONITOR ÖN	LCD MONITOR FRONT		1		300904		ACTIA
2	7607005734	LCD MONITOR ORTA	LCD MONITOR CENTER		1		300904		BLAUPUNKT
2	8390319Y	LCD MONITOR ORTA	LCD MONITOR CENTER		1		300904		ACTIA
3	TO346100Y	DIŞ KAPAK	COVER OUTER		1		300904		for BLAUPUNKT
3	63111-97500-10Y	MONITOR TABLASI	TABLE MONITOR		1		300904		for ACTIA
4	TO346101Y	İÇ KAPAK	COVER INNER		1		300904		for BLAUPUNKT
5	TY353106Y	FRP KAPAK	COVER FRP		1		300904		for BLAUPUNKT

TEMSA	Film oynayıcı DVD player	Group No : 35-052 Draw. Num. : x Rev. Date :
	Vehicle Model: TB162W, TB162Z, TB162X, TB162Y, TB163W, TB163Z, TB163X, TB163Y	Page : 1

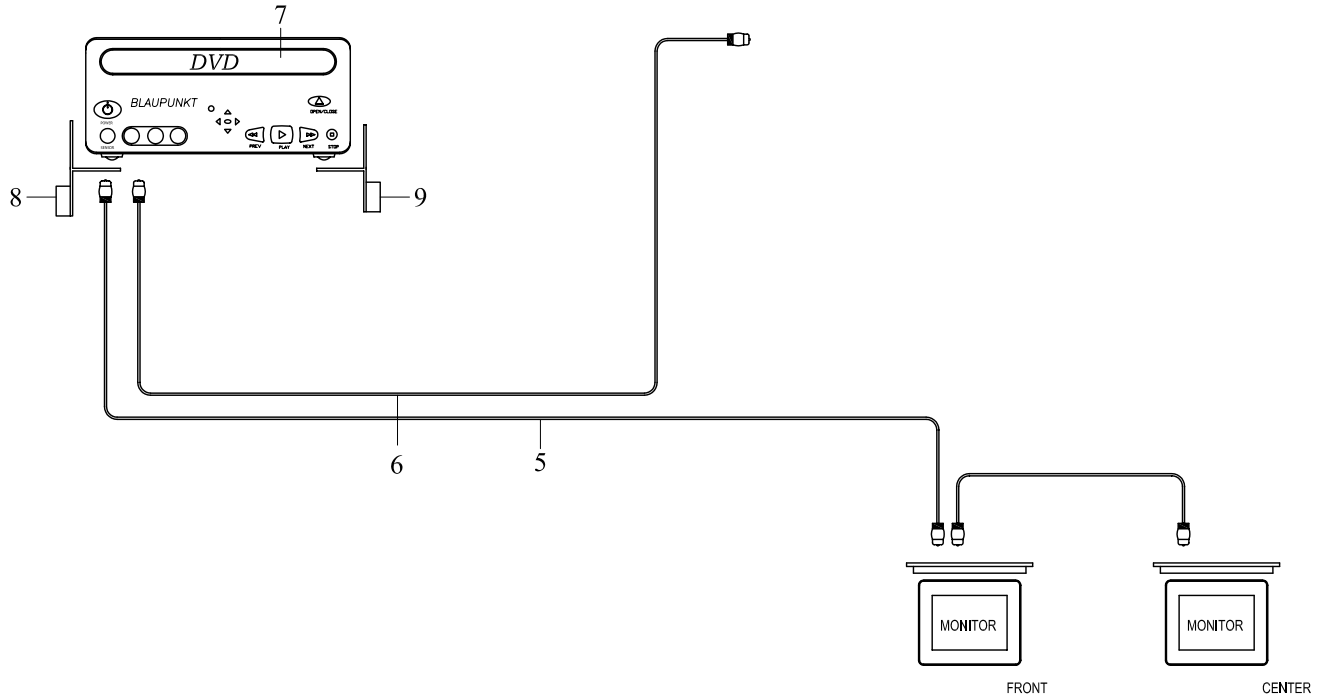

TEMSA	Film oynayıcı DVD DVD player	Drw.no: 63111-90006-71 Vehicle Model: **TB162W, TB162Z, TB162X, TB162Y** **TB163W, TB163Z, TB163X, TB163Y**	**35-052** RevDate: Page: 1

Pos	Part Number	Turkish	English	German	Qty	R/P	From	Up To	Original Number Supplier
5	TC214239Y	VİDEO KABLOSU	CABLE , VIDEO		2		1		
6	TC214244Y	AUDİ KABLOSU	CABLE , AUDIO		2		1		
7	7607276001	DVD FİLM OYNATICI	DVD PLAYER		1		1		BLAUPUNKT
8	63111-90018-03Y	BRAKET	BRACKET		1		1		
9	63111-90018-04Y	BRAKET	BRACKET		1		1		

TEMSA	Kanallı ses yayın sistemi - BLUAPUNKT Multi- channel audio system - BLUAPUNKT x	Group No : 35-053 Draw. Num. : x Rev. Date : Page : 6
	Vehicle Model: TB162W, TB162Z, TB163W, TB163Z,	

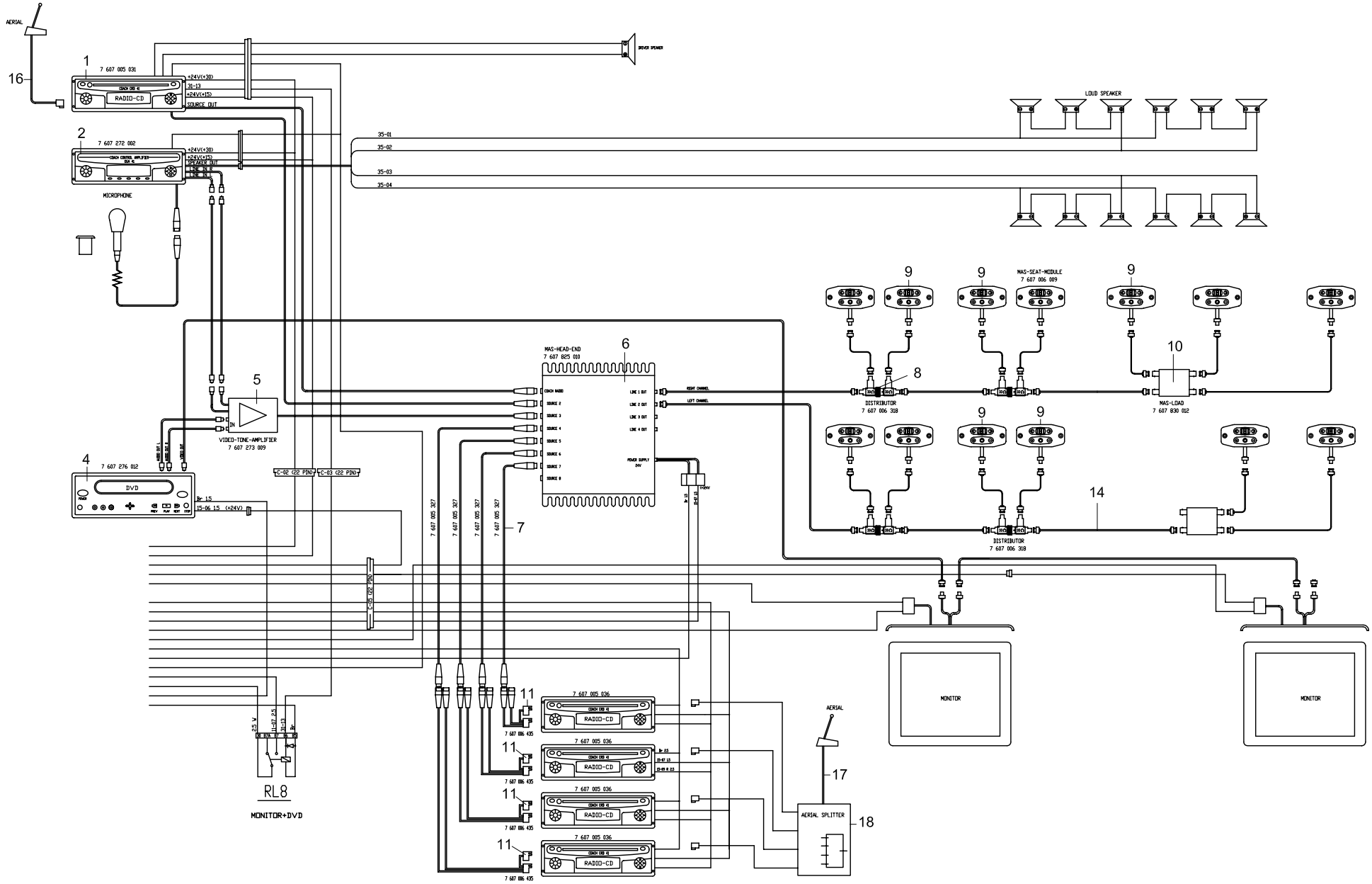

TEMSA	Kanallı ses yayın sistemi - BLUAPUNKT Multi- channel audio system - BLUAPUNKT	Drw.no: 64153-96300-70/TN254007/64201-94070-71 Vehicle Model: **TB162W, TB162Z** **TB163W, TB163Z**	**35-053** RevDate: Page: 1

Pos	Part Number	Turkish	English	German	Qty	R/P	From	Up To	Original Number Supplier
1	7607005031	RADIO+CD	COACH RADIO CRD41		1		1		BLUAPUNKT
2	7607272002	SES YÜKSELTİCİ	CONTROL AMPLIFIER		1		1		BLUAPUNKT
4	7607276012	FİLM OYNATICI	DVD PLAYER		1		1		BLUAPUNKT
5	7607273009	VİDEO SES TONU YÜKSELTİCİ	VIDEO TONE AMPLIFIER		1		1		BLUAPUNKT
6	7607825010	ANA BEYİN	MASTER HEAD		1		1		BLUAPUNKT
7	7607006327	BAŞLANGIÇ KABLOSU	PREAMP. CABLE		7		1		BLUAPUNKT
8	7607006318	DAĞITICI	DISTRIBUTOR		22		1		BLUAPUNKT
9	7607006009	KULAKLIK MODÜLÜ- YOLCU	MAS SEAT MODULE		47		1		BLUAPUNKT
10	7607830012	ANA YÜKLEYİCİ	MAS LOAD		2		1		BLUAPUNKT
11	7607006435	HAT GİRİŞ/ÇIKIŞ	CLASSIC LINE MAS SET		5		1		BLUAPUNKT
14	TN254145Y	KABLO	CABLE		26		1		
14	TN254146Y	KABLO	CABLE		47		1		
16	7617491005	ANTEN KABLOSU UZATMA	CABLE, AERIAL EXTENSION		1		1		BLUAPUNKT
17	TN254128Y	RADYO ANTEN KABLOSU	AERIAL CABLE, RADIO		1		1		
18	TN254127Y	DAĞITICI	SPLITTER -1IN 4OUT		1		1		

TEMSA	Geri gidiş kamerası ve monitör Back reverse camera and monitor	Group No : 35-060 Draw. Num. : x Rev. Date :
	Vehicle Model: TB162W, TB162Z, TB163W, TB163Z,	Page : 1

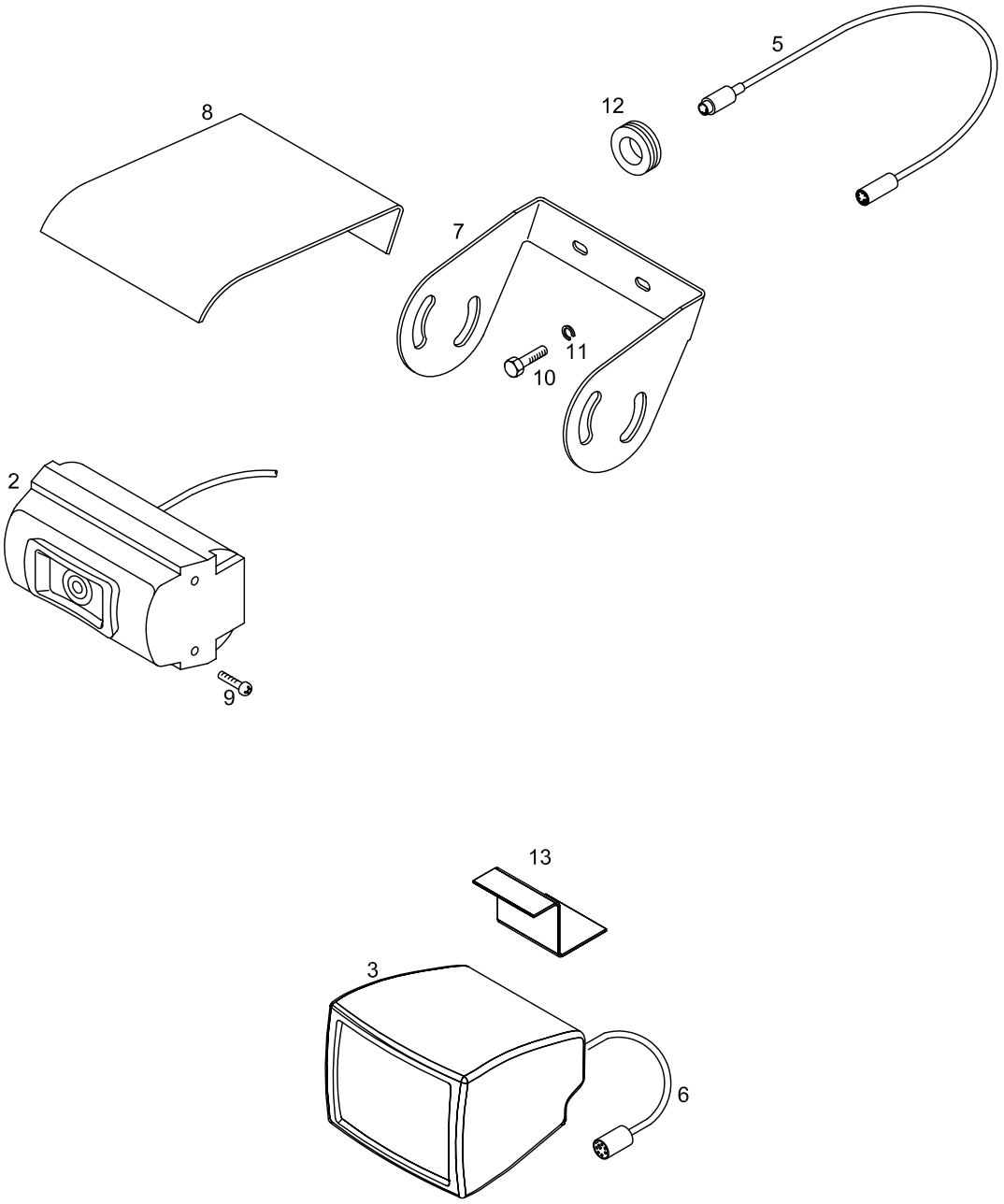

TEMSA	Geri gidiş kamerası ve monitör Back reverse camera and monitor	Drw.no: 63111-90500-85Y Vehicle Model: **TB162W, TB162Z** **TB163W, TB163Z**	**35-060** RevDate: Page: 1

Pos	Part Number	Turkish	English	German	Qty	R/P	From	Up To	Original Number Supplier
2	TU283122Y	KAMERA - DIŞ	CAMERA -OUTSIDE VIEW		1		1		MOBITRONIC RV - 20
3	TU283142Y	MONITOR	MONITOR		1		1		MOBITRONIC RV - 20
5	TU283123Y	KABLO DIŞ KAMERA	CABLE , CAMERA OUTSIDE		1		1		MOBITRONIC
6	TU283145Y	MONİTOR KABLOSU	CABLE MONITOR		1		1		MOBITRONIC
7	TU283121Y	KAMERA BRAKETİ	BRACKET, CAMERA		1		1		
8	TU283117CY	KAMERA BRAKETİ	BRACKET, CAMERA		1		1		
8	MF450153Y	PUL	WASHER PLAIN		AR		1		
9	MF452628Y	VİDA	SCREW		AR		1		
10	MF100025Y	CIVATA	BOLT		AR		1		
11	MF450404Y	RONDELA	WASHER SPRING		AR		1		
12	MA275700Y	GROMET	GROMMET		1		1		
13	64183-97030-20Y	MONITOR PANELİ	PANEL, MONITOR		1		290704		

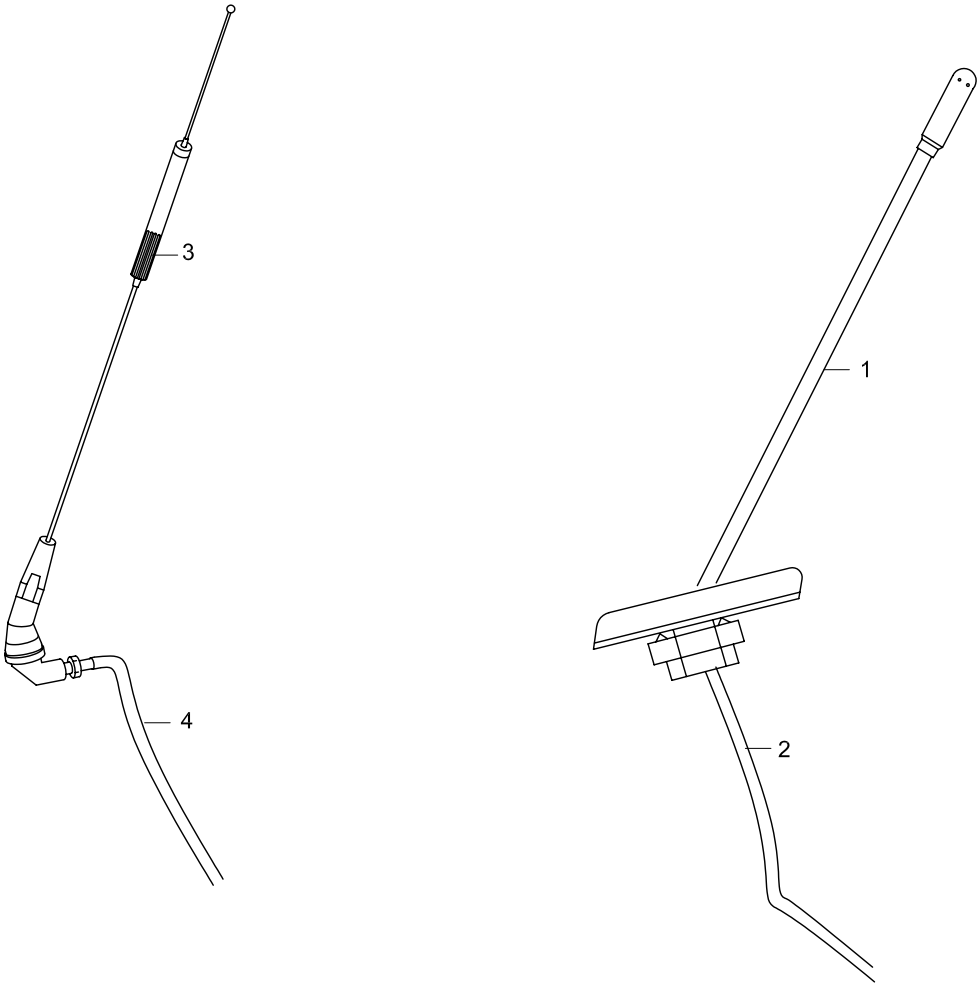

5

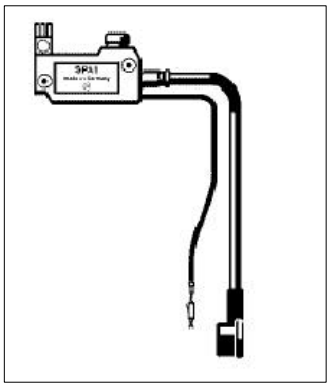

TEMSA	Anten Antenna	Drw.no: 63111-30500-71/ 64201-94070-71 Vehicle Model: **TB162W, TB162Z, TB162X, TB162Y** **TB163W, TB163Z, TB163X, TB163Y**	**35-065** RevDate: Page: 1

Pos	Part Number	Turkish	English	German	Qty	R/P	From	Up To	Original Number Supplier
1	7691270182	ANTEN MULTI MEDIA	AERIAL MULTIMEDIA		1		1		BLUAPUNKT
2	8694811081	ANTEN KABLOSU	CABLE, AERIAL		1		1		BLUAPUNKT
3	7691280014	TV ANTENİ	ANTENNA, TV		1		1		BLUAPUNKT
4	TC214238Y	TV ANTEN KABLOSU	CABLE, TV ANTENNA		1		1	?	
5	7691290202	VOLTAJ ADAPTÖRÜ	VOLTAGE ADAPTER SPA 1		1		1		BLUAPUNKT

TEMSA	Uyku kabini Sleeping cabin	Group No : 35-070 Draw. Num. : x Rev. Date : Page : 1
	Vehicle Model: TB162W, TB162Z, TB163W, TB163Z,	

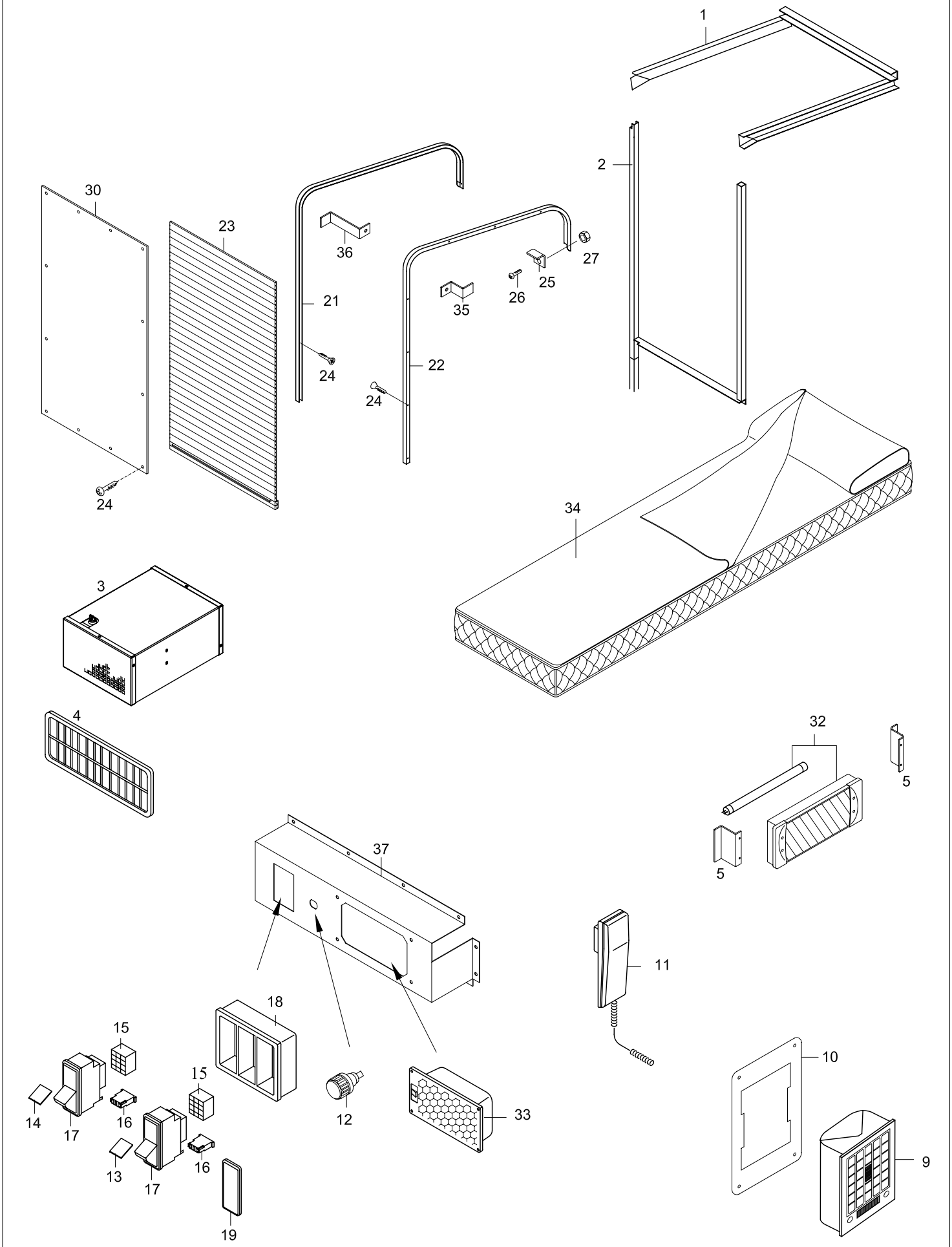

TEMSA	Uyku kabini Sleeping Cabin	Drw.no: 62078-90200-70/-90010-70 Vehicle Model: **TB162W, TB162Z** **TB163W, TB163Z**	**35-070** RevDate: Page: 1

Pos	Part Number	Turkish	English	German	Qty	R/P	From	Up To	Original Number Supplier
1	62078-90010-01Y	ÇERÇEVE	FRAME		1		1		
2	62078-90010-02Y	ÇERÇEVE	FRAME		1		1		
3	55050254Y	KALORİFER	HEATER		1		270404		
4	35077013Y	MENFEZ	GRILLE		1		270404		
5	61714-90130-05Y	Z-PLAKA	PLATE-Z		2		1		
9	61714-80900-22Y	MENFEZ	GRILLE		1		1		option
10	61714-80900-23Y	PLAKA	PLATE		1		1		option
11	63352-70020-01Y	DİYAFON	DIAPHONE		1		1	270404	
11	TU286130Y	DİYAFON	DIAPHONE		1		270404		
12	64153-70729-03Y	İKAZ LAMBASI KIRMIZI	WARNING LAMP RED		1		1		
13	596639Y	ETİKET - GECE AYDINLATMA	INSERT - LAMP		1		1		
14	596651Y	ETİKET - KORİDOR LAMBASI	INSERT - AISLE LAMP		1		1		
15	596289Y	SOKET YUVASI	SOCKET HOUSING		2		1		
16	913328Y	SOKET YUVASI	SOCKET HOUSING		2		1		
17	511018Y	SİVİÇ	SWITCH		2		1		
18	595502Y	ÇERÇEVE	MOUNTING FRAME		1		1		
19	596273Y	KAPAK	COVER		1		1		
21	62078-90200-01Y	RAY	RAIL		1		1		
22	62078-90200-02Y	RAY	RAIL		1		1		
23	62078-90200-03Y	AKORDEON KAPI	ROLLER		1		1		
24	MF453612Y	VİDA	SCREW		AR		1		
25	TU341119Y	STOPLAYICI	STOPPER		2		1	?	
26	MF200027Y	VİDA	SCREW		AR		1		
27	MF430002Y	SOMUN	NUT		AR		1		
30	61714-90810-01Y	PANEL	PANEL		1		1		WITHOUT ROLLER
32	TU252118Y	LAMBA	LAMP		1		1		
33	63314-70238-01Y	HOPARLOR	SPEAKER		1		1		
34	TU285107Y	YATAK SETİ	BED SET		1		1		
35	62078-90200-06Y	L-PLAKA	PLATE-L		1		1		
35	62078-90200-05Y	L-PLAKA	PLATE-L		1		1	280305	
36	62078-90200-05Y	L-PLAKA	PLATE-L		1		280305		
37	61714-90130-02AY	KAPAK	COVER		1		1	181004	
37	61714-90130-32Y	KAPAK	COVER		1		181004		

TEMSA	Yangın söndürücü Fire extinguisher x	Group No : 35-100 Draw. Num. : x Rev. Date :
	Vehicle Model: TB162W, TB162Z, TB162X, TB162Y, TB163W, TB163Z, TB163X, TB163Y	Page : 1

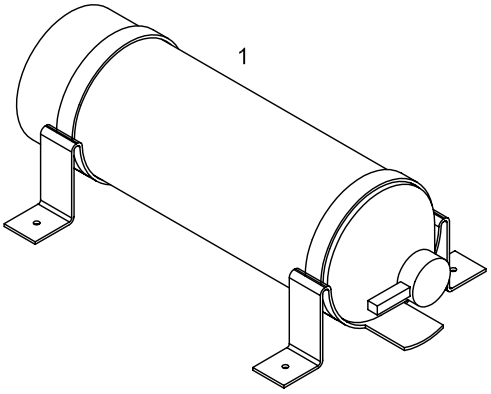

TEMSA	Yangın söndürücü Fire extinguisher	Drw.no: Vehicle Model: **TB162W, TB162Z, TB162X, TB162Y** **TB163W, TB163Z, TB163X, TB163Y**	**35-100** RevDate: Page: 1

Pos	Part Number	Turkish	English	German	Qty	R/P	From	Up To	Original Number Supplier
1	63274-96050-20Y	YANGIN SÖNDÜRÜCÜ	FIRE EXTINGUISHER		1		1		
1	63274-96050-11Y	YANGIN SÖNDÜRÜCÜ	FIRE EXTINGUISHER		1		1		for ISRAEL

TEMSA	Emniyet çekici ve askı Safety hammer & hanger	Group No : 35-120 Draw. Num. : x Rev. Date :
	Vehicle Model: TB162W, TB162Z, TB162X, TB162Y, TB163W, TB163Z, TB163X, TB163Y	Page : 1

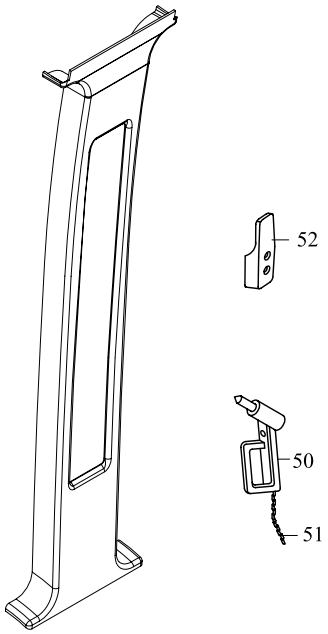

TEMSA	Emniyet çekici ve askı Safety hammer & hanger	Drw.no: 64103-96000-70/97/98 Vehicle Model: **TB162W, TB162Z, TB162X, TB162Y** **TB163W, TB163Z, TB163X, TB163Y**	**35-120** RevDate: Page: 1

Pos	Part Number	Turkish	English	German	Qty	R/P	From	Up To	Original Number Supplier
50	64103-31430-T2Y	ÇEKİÇ	HAMMER		9		1		OPTION
51	64103-92000-14Y	ÇEKİÇ ZİNCİRİ	CHAIN HAMMER		9		1		OPTION
52	TU340192Y	ASKI	HANGER		10		1		OPTION

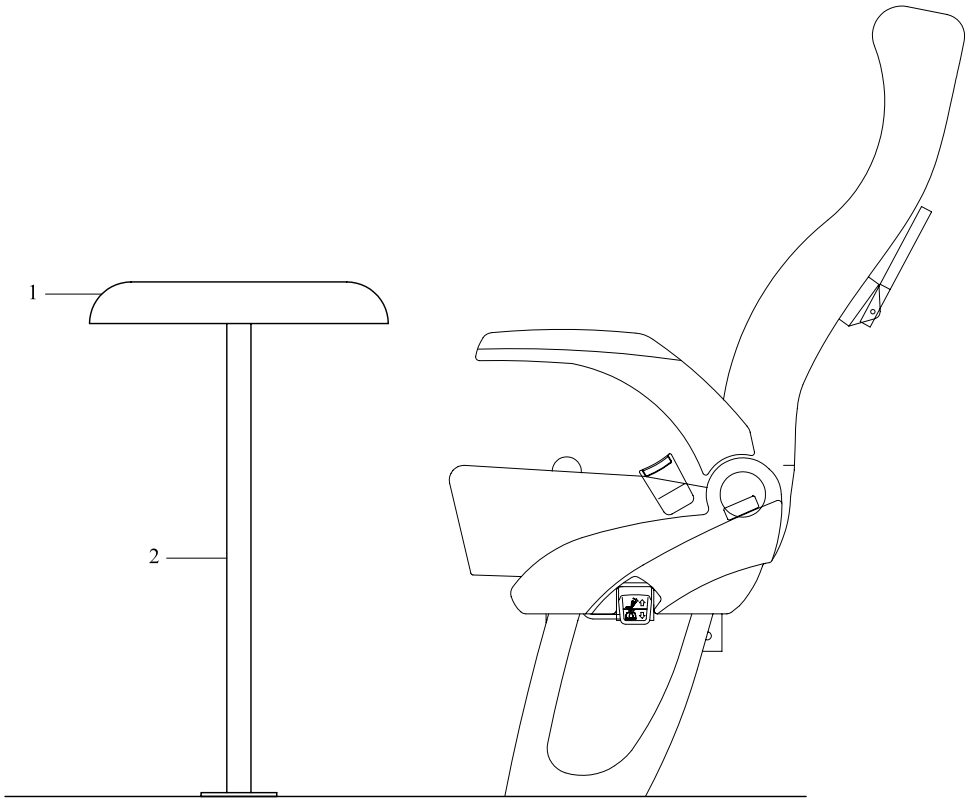
1
2

TEMSA	Masa Table	Drw.no: 65119-90016-90Y Vehicle Model: **TB162W, TB162Z** **TB163W, TB163Z**	**35-130** RevDate: Page: 1

Pos	Part Number	Turkish	English	German	Qty	R/P	From	Up To	Original Number Supplier
1	TM290324-01Y	MASA	TABLE		2		1		OPTION
2	TM290324-02Y	MASA AYAĞI	FOOT TABLE		2		1		OPTION